Mineola Signs
1808 SW Biltmore Street
Port Saint Lucie, FL 34984
P: 772-807-8417
F: 772-807-8478
Email: Barbararaveli@yahoo.com

October 6th, 2011

To whom this letter may concern:

It is our intention to appeal the planning and zoning decision to reject the variance proposed on the October 4th meeting for Save - A - Lot (P11-113). The variance requested was to install a 5' set of channel letters for the main identification wall sign for the tenant Save - A - Lot. Although the neighboring tenants such as DD's discounts, Staples, Walmart, Walgreens all have bigger letters ranging from 5' to 7' they did not allow our variance requesting the 5' letter. The details of the variance request are as follows:

1. Square Footage - A 64 square foot variance to Table 1 of Chapter 155 of the Sign Code -Said code allows a maximum cumulative square footage of 122 for this façade sign, whereas the applicant is requesting a maximum of 186 square feet for façade signage.

2. Letter height - A 36" variance to section 155.08(E)(1)(b) of the Sign Code for the letter "S" - Said code allows a maximum letter height of 24" for a sign attached to a building, whereas the applicant is requesting a letter height of 60" for the letter "S" for the façade sign.

3. Letter height - A 18" variance to section 155.08(E)(1)(b) of the Sign Code for the letters "ave" - Said code allows a maximum letter height of 24" for a sign attached to a building, whereas the applicant is requesting a letter height of 42" for the letters "ave" for the façade sign.

4. Letter height - A 3" variance to section 155.08(E)(1)(b) of the Sign Code for the letter "a" - Said code allows a maximum letter height of 24" for a sign attached to a building, whereas the applicant is requesting a letter height of 27" for the letter "a" for the façade sign.

5. Letter height - A 18" variance to section 155.08(E)(1)(b) of the Sign Code for the letters "Lot" - Said code allows a maximum letter height of 24" for a sign attached to a building, whereas the applicant is requesting a letter height of 42" for the letter "Lot" for the façade sign.

6. Letter height - A 6" variance to section 155.08(E)(1)(b) of the Sign Code for the letters "food stores" - Said code allows a maximum letter height of 24" for a sign attached to a building, whereas the applicant is requesting a letter height of 30" for the letters "food stores" for the façade sign.

A copy of the variance application and a copy of what was discussed at the meeting will be attached to this letter. In order to reach a compromise we are now suggesting that a 4' letter height maximum be approved. This change will affect the following:

Variance for square footage - Instead of a 64 square foot increase the increase will now be 2 square feet.

Variance for letter height
Instead of a 36" variance for the letter "S" the variance will be reduced to 24".

Instead of an 18"variance for the letters "ave" the variance will be reduced to 12".

Instead of a 3" variance for the letter "a" there will no longer be a variance requested because the new letter height of 22" will be 2" smaller than the code allows (24").

Instead of an 18" variance for the letters "Lot" the variance will be reduced to 17".

Instead of a 6" variance for the section that reads "food stores", there will no longer be a variance requested as the new letter height will meet code at 24".

We feel that our requests are reasonable and we are only requesting what was allowed for other stores in the same plaza. They want to be concurrent with the rest of the plaza. We want to be competitive with Staples and Beall's and to be seen from the road. Signage is everything in the retail world and we are only looking to get what other stores in the area, even in the same plaza were granted.

Sincerely,

Barbara Rezende

Barbara Rezende

What we propose

SITE PLAN

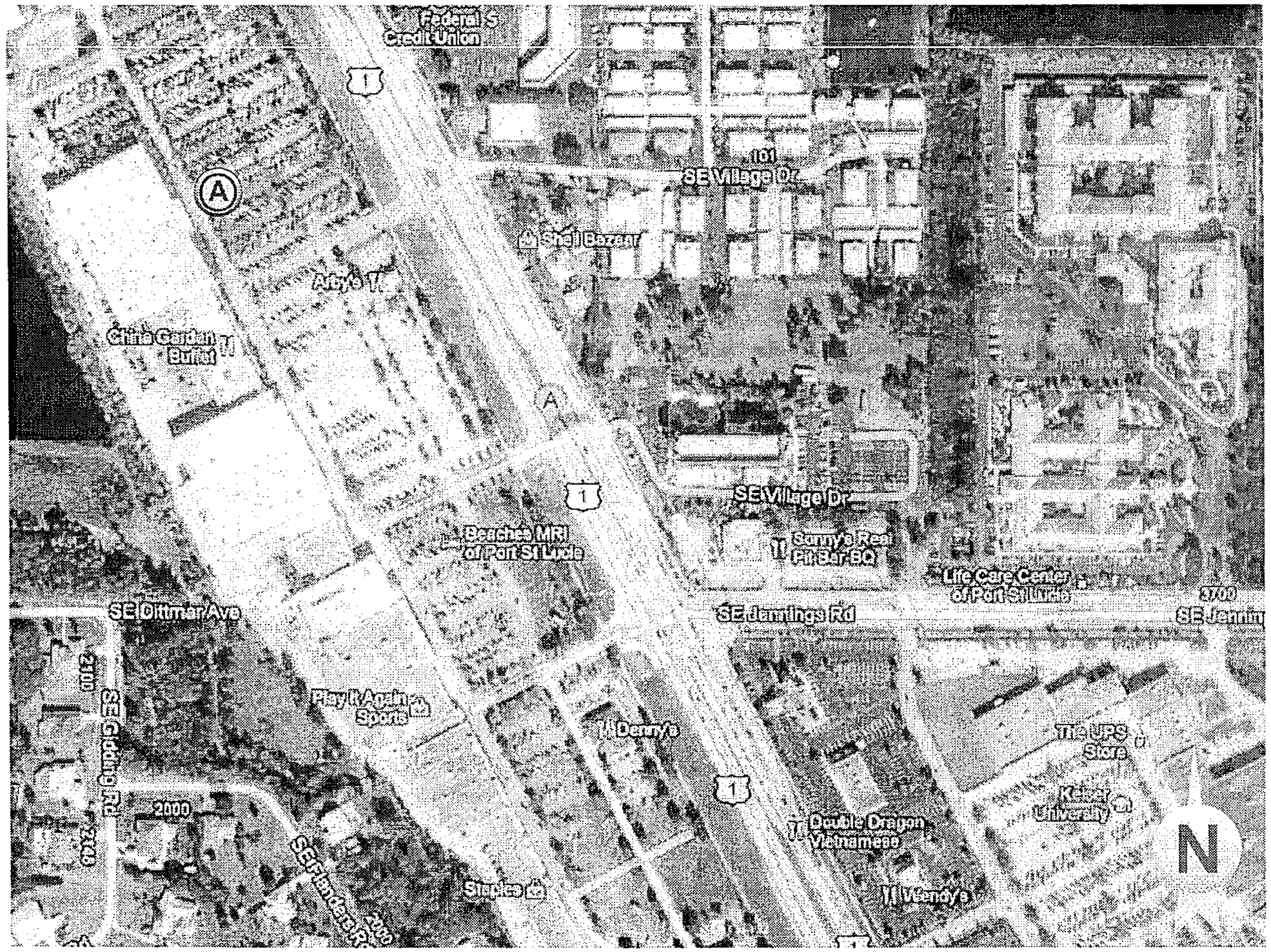

SIGNAGE SPECIFICATIONS

(A) Manufacture and Install (1) Set of Channel Letters

AREA MAP

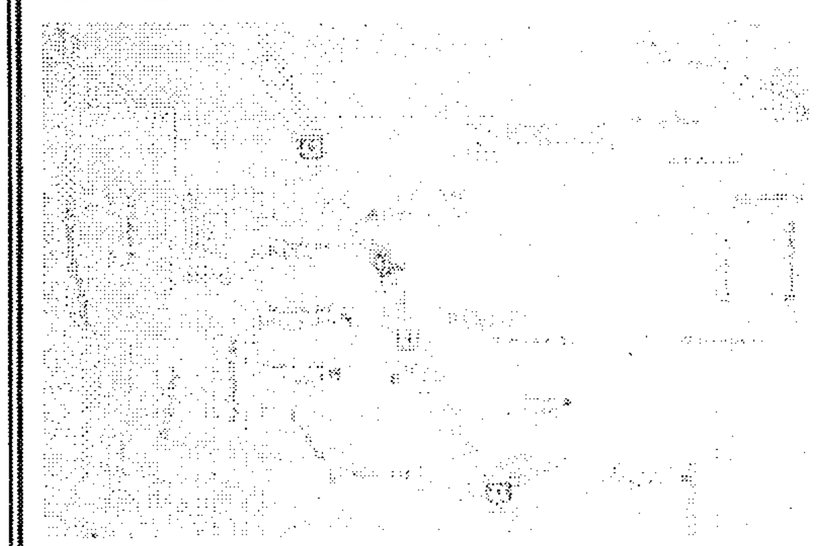

COAST SIGN
INCORPORATED
1500 West Embassy St. Anaheim, CA 92802
(714) 520-9144 FAX: (714) 520-5847

Date: 09-14-11	Project Name: Save-a-lot	
Scale: NTS	Address: 10105 US Hwy 1	
Drawn: Hermes A.	City / State: Port Saint Lucie, FL	
Sales: CB	Client Approval:	Date:

This is an original unpublished drawing created by Coast Sign, Inc. It is submitted for your personal use in conjunction with a project being planned for you by Coast Sign, Inc., And shall not be reproduced, used by or disclosed to any firm or corporation for any purpose whatsoever without written permission.

No.	Designer	Date	Revision Notes
1			
2			
3			
4			
5			
6			

DESIGN DRAWING 1 of 3

Request Number:
DEV-SVLT-00011-R2

File Location:
W:\Save-a-lot\Art\Drawings\DEV -SVLT-00011

11 X 17 TEMPLATE VERSION 5.0

EXISTING

PROPOSED

Overall Sign Band
Area: 288 Sq. Ft.

Proposed
Signage: 124 Sq. Ft.

COAST SIGN
INCORPORATED
1500 West Embassy St. Anaheim, CA 92802
(714) 520-9144 FAX: (714) 520-5847

Date: 08-14-11	Project Name: Save-a-lot	
Scale: Any	Address: 10105 US Hwy 1	
Drawn: Hermes A.	City / State: Port Saint Lucie, FL	
Sales: CB	Client Approval:	Date:

This is an original unpublished drawing created by Coast Sign, Inc. It is submitted for your personal use in conjunction with a project being planned for you by Coast Sign, Inc., And shall not be reproduced, used by or disclosed to any firm or corporation for any purpose whatsoever without written permission.

No.	Designer	Date	Revision Notes
1			
2			
3			
4			
5			
6			

DESIGN DRAWING 2 of 3

Request Number:
DEV-SVLT-00011-R2

File Location:
W:\Save-a-lot\Art\Drawings\DEV -SVLT-00011

11 X 17 TEMPLATE VERSION 5.0

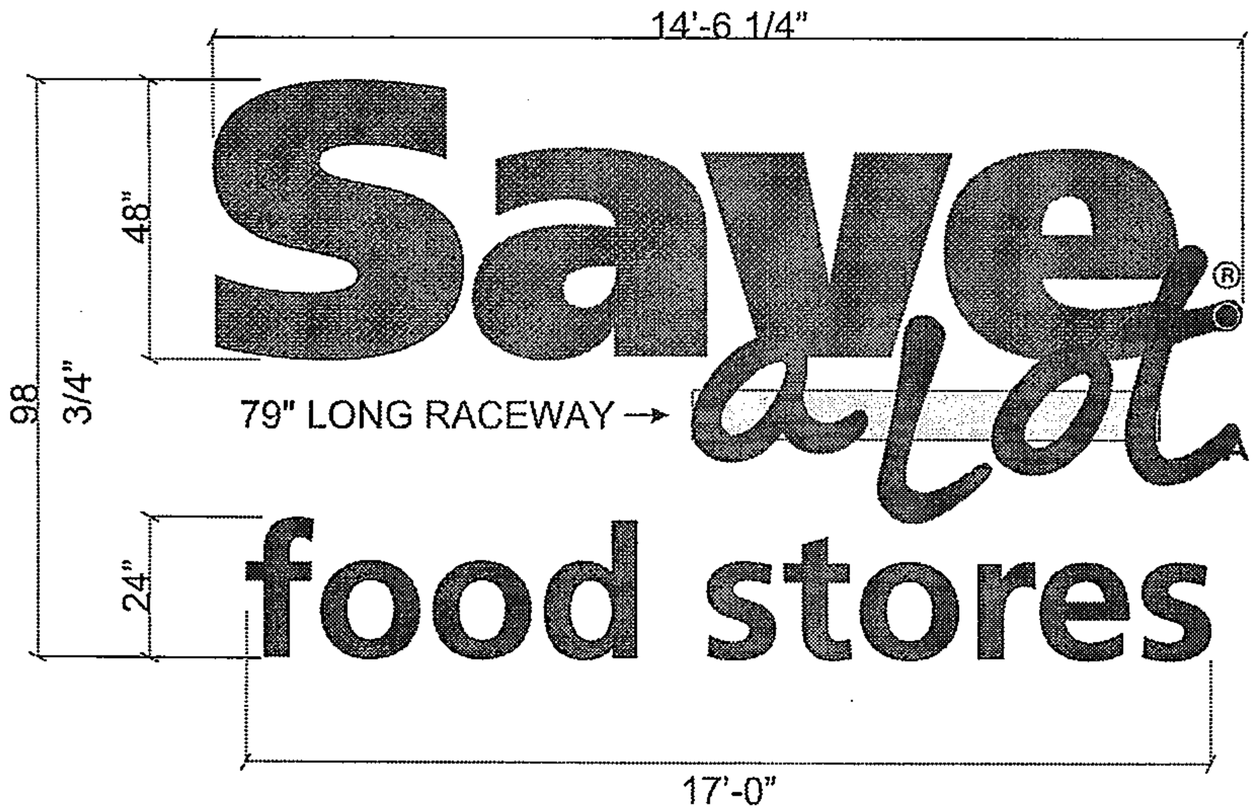

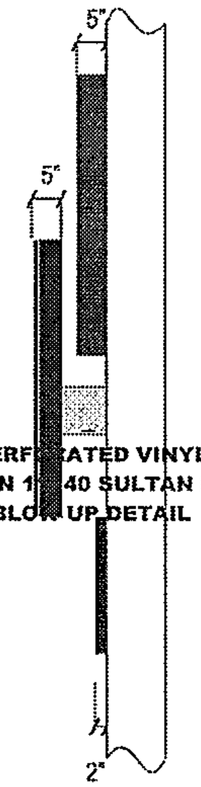

PERF ATED VINYL
3M # DN 1 40 SULTAN BLUE
BLOW UP DETAIL

DETAIL A not to scale
Scale:

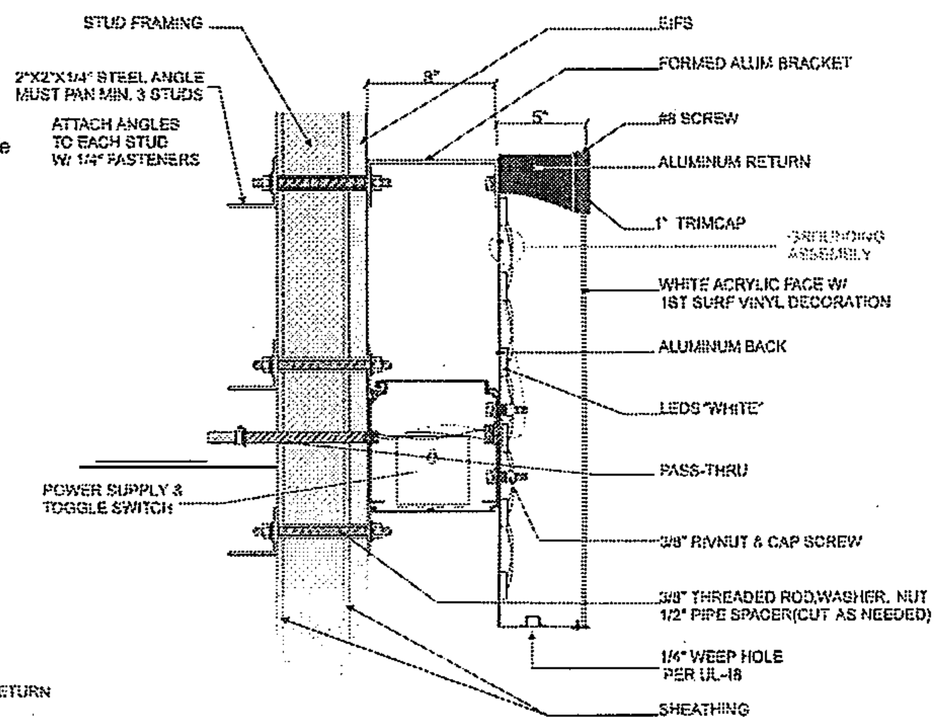

SECTION @ A LOT LTRS not to scale
Scale:

(A) FRONT & SIDE VIEW @ ILLUMINATED CHANNEL LETTERS

SCALE: 3/4" = 1'-0"

MANUFACTURE AND INSTALL ONE (1) SET OF CHANNEL LETTERS

GENERAL SPECIFICATIONS: Save

FACES: .177 THICK ACRYLIC #2793 "RED"
RETURNS: .063 THICK ALUM COIL PAINTED PER CURRENT COLOR SPECS
TRIMCAP: 2.0 JEWELITE "RED"
BACKS: .080 THICK PRE-PAINTED ALUMINUM "WHITE"
ILLUMINATION: US-LED'S PLUS-SAVER 3 LED MODULES "RED"

GENERAL SPECIFICATIONS: a Lot

FACES: .177 THICK ACRYLIC #7328 "WHITE" w/ 1ST SURFACE VINYL.
RETURNS: .063 THICK ALUM COIL PAINTED PER CURRENT COLOR SPECS
TRIMCAP: 1" JEWELITE "BLUE"
BACKS: .080 THICK PRE-PAINTED ALUMINUM "WHITE"
ILLUMINATION: US-LED'S POINT WHITE LED MODULES "WHITE"

GENERAL SPECIFICATIONS: food stores

TO BE PROVIDED BY OTHERS. REFER TO BOM.

ELECTRICAL SPECIFICATIONS:

(85 FT) US-LED's "PLUS-SAVER 3 RED" LED MODULES
(24 FT) US-LED's "POINT WHITE" LED MODULES
(3) PSA-12-60 POWER SUPPLIES @ 0.63 AMPS EA.

"TOTAL CIRCUIT LOAD @ 120V = 1.89 AMPS
Customer to provided (1) 120v/20a dedicated circuits.

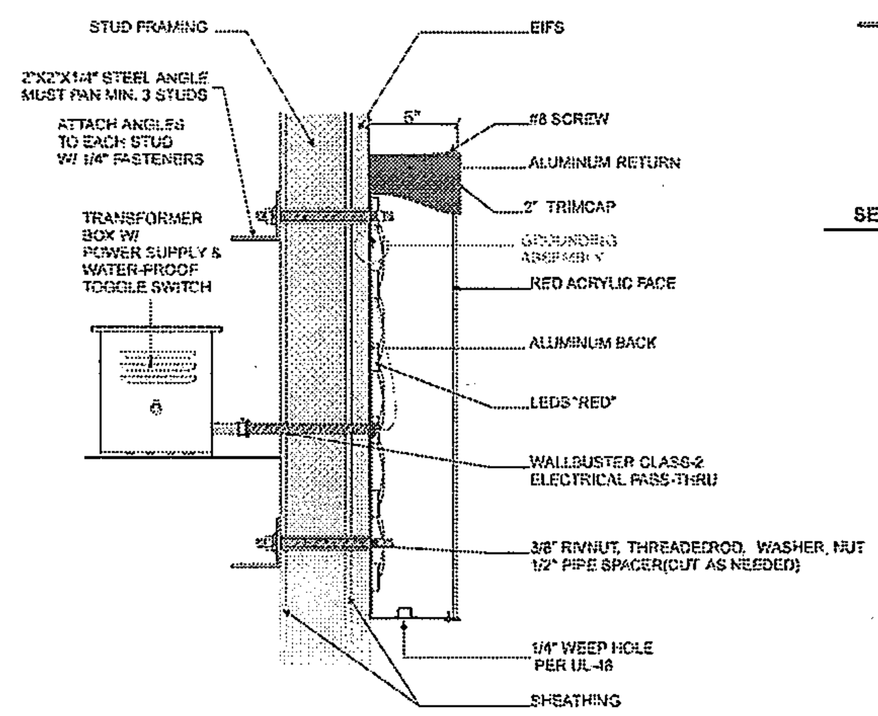

SECTION SAVE LTRS not to scale
Scale:

COLOR LEGEND

- PAINT: MP #00225 ROSE PETAL VOC FULL GLOSS FINISH (T/M PMS#186c)
- RED ACRYLIC #2793
- FULL GLOSS FINISH (T/M PMS#288c)
- 3M 3630-157 SULTAN BLUE
- FORMED ACRYLIC (BY OTHERS) #2050 DARK BLUE

COAST SIGN INCORPORATED
1500 West Embassy St. Anaheim, CA 92802
(714) 520-9144 FAX: (714) 520-5847

Date: 09-14-11	Project Name: Save-a-lot		
Scale: As Noted	Address: 10105 US Hwy 1		
Drawn: Hermes A.	City / State: Port Saint Lucie, FL		
Sales: CB	Client Approval:	Date:	

This is an original unpublished drawing created by Coast Sign, Inc. It is submitted for your personal use in conjunction with a project being planned for you by Coast Sign, Inc., And shall not be reproduced, used by or disclosed to any firm or corporation for any purpose whatsoever without written permission.

No.	Designer	Date	Revision Notes
1			
2			
3			
4			
5			
6			

DESIGN DRAWING 3 of 3

Request Number:
DEV-SVLT-00011-R2
File Location:
W:\Save-a-lot\Art\Drawings\DEV -SVL T-0001 1

11 X 17 TEMPLA TE VERSION 5.0

What is allowed

SITE PLAN

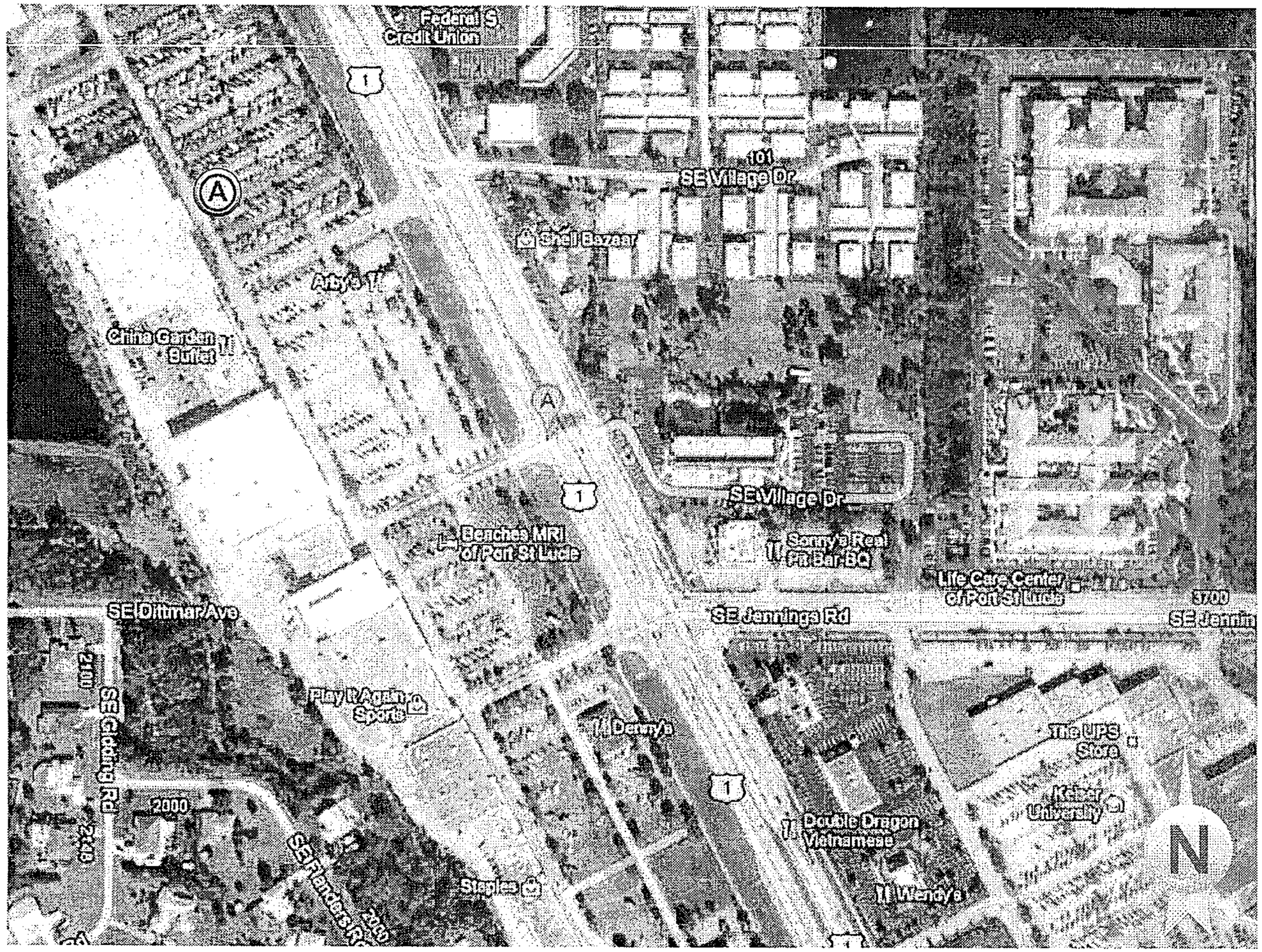

SIGNAGE SPECIFICATIONS

24" ILLUMINATED CHANNEL LETTERS
Manufacture and Install (1) Set of Channel Letters

AREA MAP

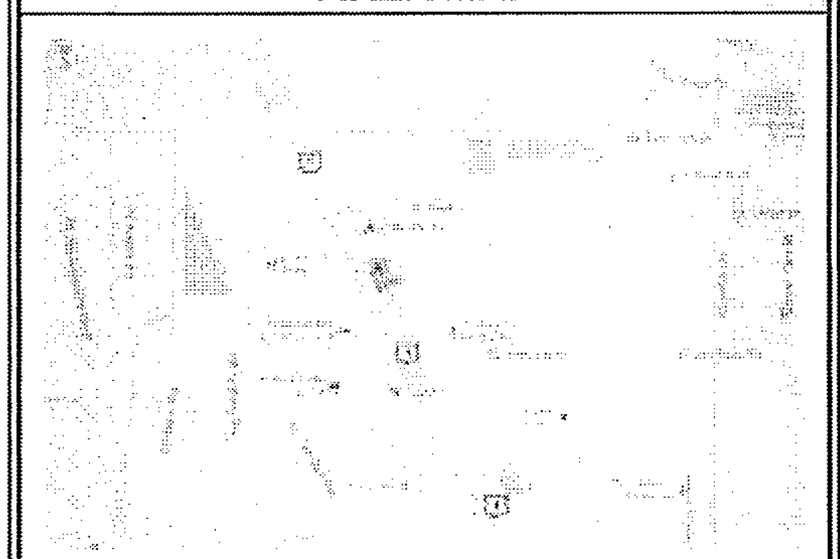

COAST SIGN INCORPORATED
1500 West Embassy St. Anaheim, CA 92802
(714) 520-9144 FAX: (714) 520-5847

Date: 09-14-11	Project Name: Save-a-lot
Scale: NTS	Address: 10105 US Hwy 1
Drawn: Hermes A.	City / State: Port Saint Lucie, FL
Sales: CB	Client Approval: Date:

This is an original unpublished drawing created by Coast Sign, Inc. It is submitted for your personal use in conjunction with a project being planned for you by Coast Sign, Inc.. And shall not be reproduced, used by or disclosed to any firm or corporation for any purpose whatsoever without written permission.

No.	Designer	Date	Revision Notes
1			
2			
3			
4			
5			
6			

DESIGN DRAWING 1 of 3

Request Number:
DEV -SVL T-00011

File Location:
W:\Save-a-lot\Art\Drawings\DEV -SVL T-00011

11 X 17 TEMPLATE VERSION 5.0

EXISTING

PROPOSED

288 S.F. - Overall Space - Signage = 30 S.F.
2' Letter Set with 12" food stores underneath

COAST SIGN
INCORPORATED
1500 West Embassy St. Anaheim, CA 92802
(714) 520-9144 FAX: (714) 520-5847

Date: 09-14-11	Project Name: Save-a-lot	
Scale: As Noted	Address: 10105 US Hwy 1	
Drawn: Hermes A.	City / State: Port Saint Lucie, FL	
Sales: CB	Client Approval:	Date:

This is an original unpublished drawing created by Coast Sign, Inc. It is submitted for your personal use in conjunction with a project being planned for you by Coast Sign, Inc., And shall not be reproduced, used by or disclosed to any firm or corporation for any purpose whatsoever without written permission.

No.	Designer	Date	Revision Notes
1			
2			
3			
4			
5			
6			

DESIGN DRAWING 2 of 3

Request Number:
DEV-SVLT-00011

File Location:
W:\Save-a-lot\Art\Drawings\DEV -SVLT-00011

11 X 17 TEMPLATE VERSION 5.0

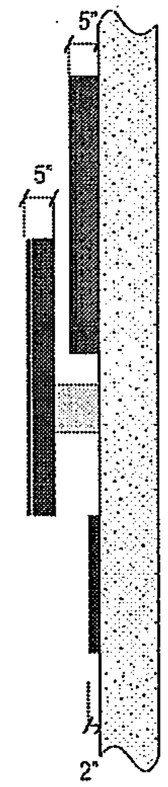

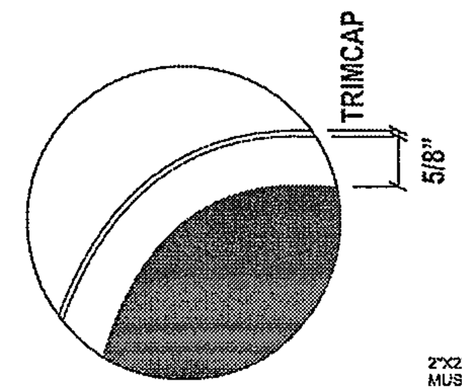

DETAIL A not to scale
Scale:

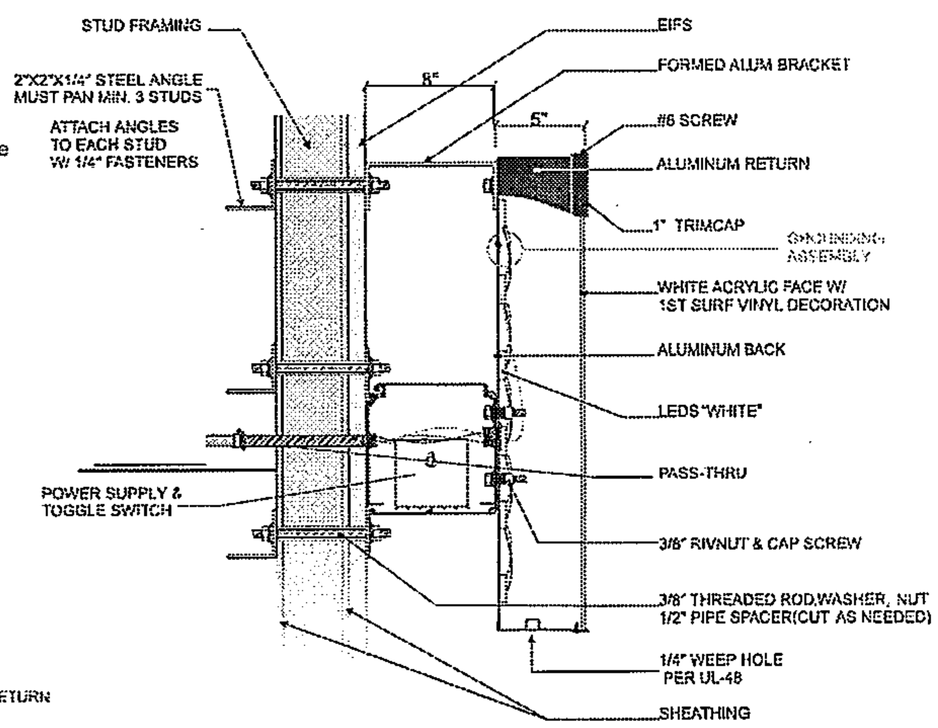

SECTION @ A LOT LTRS not to scale
Scale:

(A) FRONT & SIDE VIEW @ ILLUMINATED CHANNEL LETTERS

SCALE: 3/4" = 1'-0" SQ. FT.: 30

MANUFACTURE AND INSTALL ONE (1) SET OF CHANNEL LETTERS

GENERAL SPECIFICATIONS: Save

FACES: .177 THICK ACRYLIC #2793 "RED"
RETURNS: .063 THICK ALUM COIL PAINTED PER CURRENT COLOR SPECS
TRIMCAP: 2.0 JEWELITE "RED"
BACKS: .080 THICK PRE-PAINTED ALUMINUM "WHITE"
ILLUMINATION: US-LED'S PLUS-SAVER 3 LED MODULES "RED"

GENERAL SPECIFICATIONS: a Lot

FACES: .177 THICK ACRYLIC #7328 "WHITE" w/ 1ST SURFACE VINYL.
RETURNS: .063 THICK ALUM COIL PAINTED PER CURRENT COLOR SPECS
TRIMCAP: 1" JEWELITE "BLUE"
BACKS: .080 THICK PRE-PAINTED ALUMINUM "WHITE"
ILLUMINATION: US-LED'S POINT WHITE LED MODULES "WHITE"

GENERAL SPECIFICATIONS: food stores

TO BE PROVIDED BY OTHERS. REFER TO BOM.

ELECTRICAL SPECIFICATIONS:

(86 FT) US-LED's "PLUS-SAVER 3 RED" LED MODULES
(24 FT) US-LED's "POINT WHITE" LED MODULES
(3) PSA-12-60 POWER SUPPLIES @ 0.63 AMPS EA

"TOTAL CIRCUIT LOAD @ 120V = 1.89 AMPS
Customer to provided (1) 120v/20a dedicated circuits.

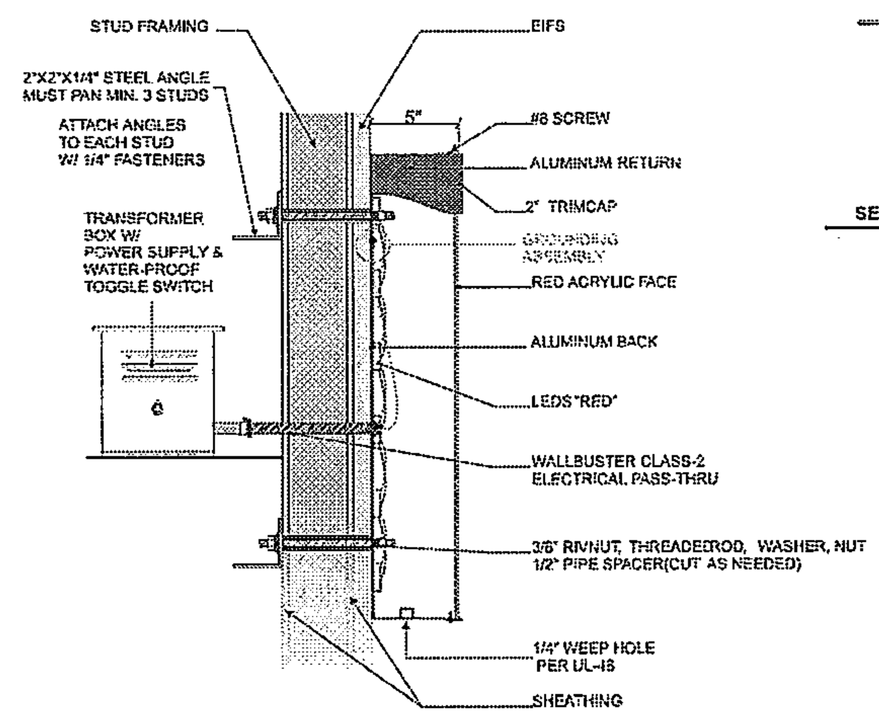

SECTION SAVE LTRS not to scale
Scale:

COLOR LEGEND

PAINT: MP #00225 ROSE PETAL VOC FULL GLOSS FINISH (T/M PMS#186c)

RED ACRYLIC #2793

PAINT : MP #00352 KIWI VOC FULL GLOSS FINISH (T/M PMS#288c)

3M 3630-157 SULTAN BLUE

FORMED ACRYLIC (BY OTHERS) #2050 DARK BLUE

COAST SIGN INCORPORATED
1500 West Embassy St. Anaheim, CA 92802
(714) 520-9144 FAX: (714) 520-5847

Date: 09-14-11	Project Name: Save-a-lot		
Scale: As Noted	Address: 10105 US Hwy 1		
Drawn: Hermes A.	City / State: Port Saint Lucie, FL		
Sales: CB	Client Approval:	Date:	

This is an original unpublished drawing created by Coast Sign, Inc. It is submitted for your personal use in conjunction with a project being planned for you by Coast Sign, Inc., And shall not be reproduced, used by or disclosed to any firm or corporation for any purpose whatsoever without written permission.

No.	Designer	Date	Revision Notes
1			
2			
3			
4			
5			
6			

DESIGN DRAWING 3 of 3

Request Number:
DEV -SVL T-00011

File Location:
W:\Save-a-lot\Art\Drawings\DEV -SVL T-0001 1

11 X 17 TEMPLA TE VERSION 5 0

our space
dd's
DISCOUNTS
Coming Soon
BUILDING A
OPEN
7 DAYS

STAPLES
The Office Superstore

dd's
DISCOUNTS®
dd's DISCOUNTS
10101
DISCOUNT DAY

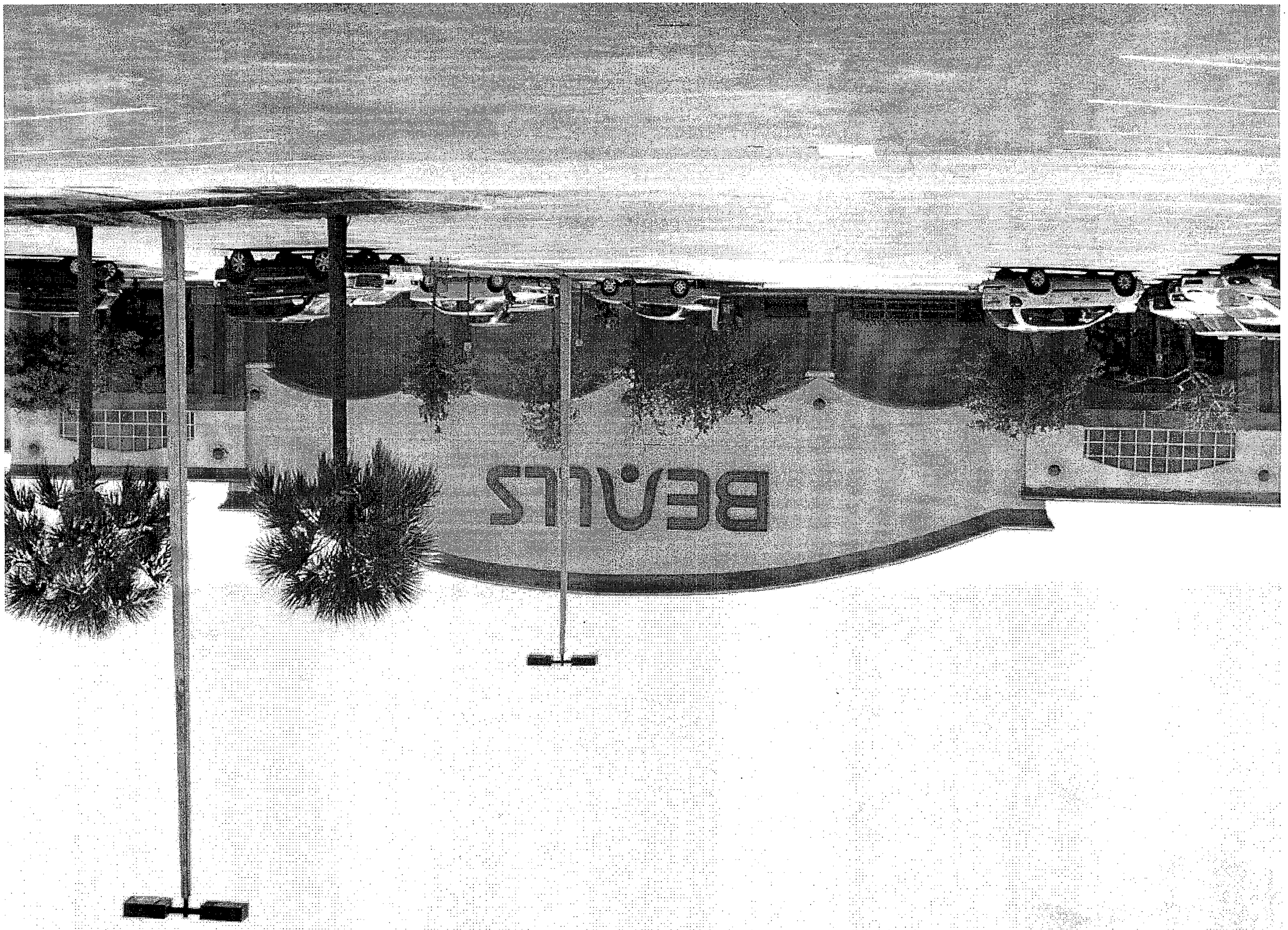
BEVERLY

food stores

A. P11-113 TRAVIS M. MOLIS, SAVE-A-LOT SIGN - VARIANCE

Ms. Huntress said, "This is a sign variance application. The applicant is Barbara Rezende of Mineola Signs. The owner is EXT Owner, LLC, and Travis M. Molis is the manager of Corporate Real Estate. The property is located in the Town Center Shopping Center at 10105 US 1 and is legally described as Town Center Parcel D, Port St. Lucie Unit 4. The site is 4.91 acres and is zoned General Commercial. The existing vacant food store was originally Albertson's and then Bravo. There are six variances being requested to Chapter 155 Sign Code. One is to the total square footage of the façade sign, and five are to the letter height for the façade sign."

Ms. Huntress continued, "Number 1 is to the square footage, and it is a 64 square foot variance to Table 1 of Chapter 155. Said Code allows a maximum cumulative square footage of 122 square feet for this façade sign. The applicant is requesting a maximum of 186 square feet. The application indicates a request for 189 square feet, but a recalculation of drawings that were recently resubmitted indicates a square footage of 186 square feet; therefore the variance requested would be 64 square feet. The rest of the requests are for letter height. Number 2 is a 36" variance to Section 155.08(E)(1)(b) of the Sign Code for the letter 'S.' Said Code allows a maximum letter height of 24" for a sign attached to a building. The applicant is requesting a letter height of 60". Number 3 is an 18" variance to Section 155.08(E)(1)(b) of the Sign Code for the letters 'ave.' Said Code allows a maximum letter height of 24" for a sign attached to a building. The applicant is requesting a letter height of 42" for the letters 'ave' for the façade sign. Number 4 is a 3" variance to the same section for the letter 'a.' Said Code allows a maximum letter height of 24" for a sign attached to a building. The applicant is requesting 27". Number 5 is an 18" variance to the Code for the letters 'Lot.' The Code allows a maximum letter height of 24 inches for a sign attached to a building, whereas the applicant is requesting a letter height of 42" for 'Lot' for the façade sign. Number 6 is a 6" variance to said Section for the letters 'food stores.' Said Code allows a maximum letter height of 24" for a sign attached to a building, whereas the applicant is requesting a letter height of 30" for the letters 'food stores' for the façade sign."

Ms. Huntress said, "Staff has evaluated the applicant's response to the variance criteria and listed that in the staff report. I have also included a list of similar variance applications in the GC zoning district and a history of the Sign Code Review Committee. They met from June 10, 2009, to December 16, 2009. They reviewed the Sign Code, the Design Standards, the sign

permitting process, sign review procedures, enforcement of the Sign Code, safety issues, the Sunshine Laws, case law, and the public engagement results. The Building, Legal, Code Enforcement, Engineering, Public Works, and Planning and Zoning Departments participated in the review and discussion of the proposed Sign Code update. The new Sign Code was approved on March 8, 2010, and any sign application submitted after that date has to comply with the new Code. Also on that date the City Council serving as the Board of Zoning Appeals requested that the City encourage commercial developments to apply for a Master Sign Program. The Planning and Zoning Department staff finds the request to be inconsistent with variance criteria as stipulated in Chapter 158.295(c) of the Zoning code and recommends denial. Any request for a variance that is denied by the Planning and Zoning Board may be appealed to the Board of Zoning Appeals. Appeal applications are made through the City Clerk's Office and must be submitted within 15 days after the Planning and Zoning Board hearing." Mr. Battle asked if this is their typical sign. Ms. Huntress replied that it is.

Barbara Rezende, Mineola Signs, said, "One reason we decided to apply for the variance is that most of the other stores in the center have bigger signs. In our case there are several trees in front of the store, so passing by on the road you won't be able to see it. We have included pictures in the application. We also have pictures to present to the board." Jesus Rolon, Project Manager for Save-a-Lot, said, "I would like to add that part of Save-a-Lot's program nationwide is to keep our prices as low as possible to benefit the community. We can do this because we don't do ads. Having a sign that is visible to our customers driving by helps bring them into our stores. This is one of three sites we are looking into in Port St. Lucie in the next couple of years. We look forward to spending time in the community. We would like this variance to be approved so we can serve the community."

Mr. Blazak said, "Thank you for coming. Are you here on your own, or did you go to the landowner of the shopping center and they refused to pursue a Master Sign Plan?" Mr. Rolon answered, "This is our standard sign package." Mr. Blazak said, "We worked long and hard with the Sign Committee. All of the shopping centers that have come before us lately have a Master Sign Plan. With our new Sign Code we don't typically deal with individual issues in a shopping center. I appreciate why you want the variance, but you could work it out with the shopping center and create a Master Sign Plan for the whole center. That's how the signage gets changed now. Were you not aware of that?" Mr. Rolon said that he was not. Mr. Blazak asked, "When you made the application did no one say that it should be a Master Sign

Program, not individual?" Mr. Rolon replied that he was not aware of it. Chair Parks asked whether this plaza does not have a Master Sign Program. Mr. Holbrook replied that it does not.

Chair Parks opened the Public Hearing. There being no comments, Chair Parks closed the Public Hearing.

Mr. Martin stated, "We did a couple of variances for other entities. These folks are asking for a 52.4% variance to the maximum square footage. But we did approve a 54.7% variance for Walmart on US 1. Regarding letter height, they are looking for a maximum 6 foot variance. Again, we have previously issued variances of 7.5 feet for Walmart and 12'10" inch variance for Town Center for DD Discount. We have issued variances for letter height and area that were significantly larger than what this applicant is asking for." Mr. Ojito said, "Even though I would like to see this approved, I think we should pursue the Master Sign Program for the shopping center. This is a major thoroughfare. We should try to provide something uniform, which this is not." Mr. Blazak asked whether the previous variances were prior to the Master Sign Program from the Sign Committee. Mr. Holbrook replied, "Most were, but if you look at the first one listed, it was after approval of the new Sign Code. That is the one for Walmart on US 1." Mr. Blazak noted, "Walmart is a stand-alone building." Mr. Holbrook said, "The variance criteria ask us to look at whether the property is being treated the same as other properties in the same zoning district. This is zoned General Commercial, so what was listed in the report are variances that were applied for in that district."
Mr. Gardner said, "A few months back we addressed a similar case. I believe it was denied on the grounds of trying to get better signage on the marquee." Mr. Holbrook advised, "Other projects have come to the board recently under different zoning districts. That's why the list wasn't exhaustive." Chair Parks said, "There is a monument sign on US 1 with the Sav-a-Lot name on it. It is very visible from the south but not from the north because of some trees. I have been to the site. If some of the trees were trimmed there would be more visibility. That would be taken care of by the management company of the plaza. The façade is not a very large space compared with the other facades in the pictures."

Mr. Blazak commented, "I have concern if this business hasn't gone to the landowner to see if they want to do a Master Sign Program. We don't know if the owner would want to do it; they may be willing." Chair Parks advised that the board can approve, deny or table the application and asked if each variance needs a separate vote. Mr. Holbrook replied in the affirmative. Mr. Blazak **moved** for the staff recommendation that the request is

City of Port St. Lucie

Planning and Zoning Department Memorandum

TO: **PLANNING AND ZONING BOARD - MEETING OF OCTOBER 4, 2011**

FROM: **KATHERINE H. HUNTRESS, PLANNER**

RE: **VARIANCE APPLICATION (PROJECT NO. P10-113)**
TRAVIS M. MOLIS, SAVE-A-LOT SIGN AT TOWN CENTER SIGN VARIANCE

DATE: **SEPTEMBER 20, 2011**

APPLICANT: Barbara Rezende of Mineola Signs is acting as the agent. The authorization letter is attached to the staff report.

OWNER: EXT Owner, LLC, Travis M. Molis, Manager of Corporate Real Estate

LOCATION: The property is located in the Town Center Shopping Center at 10105 US Highway 1.

LEGAL DESCRIPTION: Town Center Parcel D, Port St. Lucie Unit 4; a complete legal description is available in the Planning and Zoning Department.

SIZE: 4.91 acres.

EXISTING ZONING: CG (General Commercial).

EXISTING USE: Vacant food store, originally Albertsons and then Bravo.

REQUESTED VARIANCE: The requested variance is to Chapter 155 Sign Code of the Zoning Code and detailed as follows:

Square footage

1. A 64 square foot variance to Table 1 of Chapter 155 of the Sign Code.
   - Said code allows a maximum cumulative square footage of 122 for this façade sign, whereas the applicant is requesting a maximum of 186 square feet for façade signage. The application indicates a request for 189 square feet, but a recalculation of drawings that were recently resubmitted indicates a square footage of 186 square feet, therefore the variance requested would be 64 square feet.

Letter height

2. A 36" variance to Section 155.08(E)(1)(b) of the Sign Code for the letter "S".
   - Said code allows a maximum letter height of 24" for a sign attached to a building, whereas the applicant is requesting a letter height of 60" for the letter "S" for the façade sign.
3. An 18" variance to Section 155.08(E)(1)(b) of the Sign Code for the letters "ave".
   - Said code allows a maximum letter height of 24" for a sign attached to a building, whereas the applicant is requesting a letter height of 42" for the letters "ave" for the façade sign.
4. A 3" variance to Section 155.08(E)(1)(b) of the Sign Code for the letter "a".
   - Said code allows a maximum letter height of 24" for a sign attached to a building, whereas the applicant is requesting a letter height of 27" for the letter "a" for the façade sign.
5. An 18" variance to Section 155.08(E)(1)(b) of the Sign Code for the letters "Lot".
   a. Said code allows a maximum letter height of 24" for a sign attached to a building, whereas the applicant is requesting a letter height of 42" for the letters "Lot" for the façade sign.
6. A 6" variance to Section 155.08(E)(1)(b) of the Sign Code for the letters "food stores".
   a. Said code allows a maximum letter height of 24" for a sign attached to a building, whereas the applicant is requesting a letter height of 30" for the letters "food stores" for the façade sign.

IMPACTS AND FINDINGS:

Compatibility with variance criteria:

1) That special conditions and circumstances exist which are peculiar to the land, structure, or building involved and which are not applicable to other lands, buildings, or structures in the same zoning district.

   a. *Applicant response: "The building is located 415 feet from the public right of way. There are trees in the landscaping that are obstructing the view of the store front fascia."*

   b. *Staff evaluation: The setback from the road is not a criterion for measuring the signage permitted. There are no special conditions and/or circumstances peculiar to this site that warrant special consideration for having the square footage for a façade sign and the maximum letter height for a sign attached to a building to exceed the requirements of Chapter 155 Sign Code. The need for these variances is a direct result of action from the applicant. Context sensitive signage can be requested in a Master Sign Program.*

2) That the special conditions and circumstances do not result from any action of the applicant.

a. *Applicant response: "These conditions do not result from actions of the applicant as the buildings were built by others."*

b. *Staff evaluation: The location of the building is not a criterion for measuring the signage permitted. Any special conditions and/or circumstances are a direct result from the action of the applicant. The applicant has the choice of having the square footage for a façade sign and the maximum letter height for a sign attached to a building to conform to Chapter 155 Sign Code.*

3) That granting the variance requested will not confer on the applicant any special privilege that is denied by this chapter to other lands, buildings, or structures in the same zoning district.

a. *Applicant response: "Many businesses are located adjacent or close to the public right of way and do not share the disadvantage of being set back a considerable distance and therefore limiting the visibility of their signage."*

b. *Staff evaluation: P10-013 Walgreens at Eastport Plaza Sign Variance was not approved by the Planning and Zoning Board, but was subsequently approved by the Zoning Board of Appeals on April 12, 2010. Please see the 'Other' section at the end of this staff report for more sign variance applications in CG (General Commercial) zoning districts. Staff is ensuring conformance with Chapter 155 Sign Code, therefore, granting this variance will confer on the applicant a special privilege that would be denied to other lands, buildings, or structures in the area.*

4) That literal interpretation of the provisions of the chapter would deprive the applicant of rights commonly enjoyed by other properties in the same zoning district under the terms of the chapter and would work unnecessary and undue hardship on the applicant.

a. *Applicant response: "Other businesses within the same center are currently displaying wall signs that are much larger than the current code allows ranging from 5 feet to 8 feet in height. It is our feeling that a 24" sign would not be visible from the public right of way and therefore would be an unnecessary and undue hardship on Save a Lot."*

b. *Staff evaluation: According to Chapter 155 Sign Code, the maximum square footage of a façade sign is calculated at 32 square feet plus 1.5 square feet for each lineal foot of business frontage over 20', but not to exceed 200 cumulative square feet. All façade signs have a maximum letter height of 24". The Literal interpretation of the provisions of the code would not deprive the applicant of rights commonly enjoyed by other properties in the same zoning district, and would not work unnecessary and undue hardship on the applicant.*

5) That the variance requested is the minimum variance that will make possible the reasonable use of the land, building, or structure.

a. *Applicant response: "Due to the 415 foot setback and proliferation of the trees in the current landscaping, we feel that a 5 foot letter is reasonable and the minimum that would be acceptable."*

b. *Staff evaluation: The setback from the road is not a criterion for measuring the signage permitted. Regardless of the final action on this variance, reasonable use*

of the land, building, and structure already exists. It should be noted that a monument sign exists on the property and Save a Lot food stores has an existing panel on that monument sign and 122 square feet of façade signage would be allowed.

6) That the granting of the variance will be in harmony with the general intent and purpose of the chapter and that the variance will not be injurious to the area involved or otherwise detrimental to the public welfare.

   a. *Applicant response: "The general intent and purpose of the chapter is to allow effective signage. The proposed sign would be in harmony with the existing signs within the center in size and design, and would not be detrimental to the public welfare."*

   b. *Staff evaluation: The granting of this variance would not be in harmony with the intent or purpose of Chapter 155 Sign Code; however, it is not injurious to the area involved or otherwise detrimental to the public welfare.*

7) That there will be full compliance with any additional conditions and safeguards which the Planning and Zoning Board or Zoning Administrator may prescribe, including but not limited to reasonable time limits within which the action for which variance is required shall be begun or completed, or both.

   a. *Applicant response: "Save A Lot will be fully compliant with any additional conditions and safeguards which the Planning and Zoning Board or Zoning Administrator may prescribe. Including but not limited to reasonable time limits within which the action for which variance is required."*

   b. *Staff evaluation: The applicant has adequately addressed the criterion.*

OTHER: The following is a list of sign variance applications in CG (General Commercial) zoning districts:

P10-058 Wal-Mart US 1 Sign Variance

The following variance was granted by the Planning and Zoning Board on July 6, 2010:

Square footage

- A 264.24 square foot variance to Table 1 of Chapter 155 of the Sign Code to allow 464.24 square feet for façade signage.

Letter height

- A 3'6" variance to Section 155.08(E)(1)(b) of the Sign Code to allow a maximum letter height of 5'6" for the "Wal-Mart*" sign attached to the building.
- A 6' variance to Section 155.08(E)(1)(b) of the Sign Code to allow a maximum letter height of 8' for the "spark" at the end of the "Wal-Mart*" sign attached to the building.

Height of sign from finished floor elevation

- A 2'6' variance to Table 1 of the Sign Code to allow a maximum height of 22'6" for the "Outdoor Living" façade sign attached to a building.
- A 6'2" variance to Table 1 of the Sign Code to allow a maximum height of 26'2" for the "Wal-Mart*" façade sign attached to a building.
- A 7'5" variance to Table 1 of the Sign Code to allow a maximum height of 27'5" for the "asterisk" façade sign attached to a building.

P10-057 Walgreens at Eastport Plaza Sign Variance

The following variance was granted by the Planning and Zoning Board on July 6, 2010:

Size of a Corporate Logo

- A 33.375" variance to Chapter 155 Sign Code to allow a 69.375" corporate logo for the façade sign attached to a building.

Height of sign from finished floor elevation

- A 3'11" variance to Chapter 155.08(E)(1)(c)and(f) to allow a maximum height of 23'11" for the façade sign attached to a building.

P10-013 Walgreens at Eastport Plaza Sign Variance

The following variance was denied by the Planning and Zoning Board on March 2, 2010, but was subsequently granted by the Zoning Board of Appeals on April 12, 2010:

Letter height

- A 6" variance to the Citywide Design Standards to allow a maximum letter height of 30" for the letters "W", "l", and "g" for a sign attached to the building.

P07-228 Ross Stores, Inc. (Town Center) Sign Variance

The following variances were granted by the Planning and Zoning Board on August 7, 2007:

Letter height

- A 48" variance to the Citywide Design Standards to allow a maximum letter height of 72" for the letters "dd's" was granted. A 3" variance to the Citywide Design Standards to allow a maximum letter height of 27" for the letters "DISCOUNTS" was denied.

Height of sign from finished floor elevation

- A 12' 10"' variance to the Citywide Design Standards to allow a maximum height of 27' 10" for a façade sign attached to a building.

P07-231 Jack Messer - Parkway Plaza Sign Variance
The following variance was granted by the Planning and Zoning Board on August 7, 2007:

Height of sign from finished floor elevation

- A 3' variance to the Citywide Design Standards to allow a maximum height of 18' for a façade sign attached to a building.

HISTORY OF SIGN CODE REVIEW COMMITTEE:

On November 24, 2008 a discussion was held before the City Council regarding the Sign Code. Assistant City Manager Greg Oravec proposed a three-tier plan to the Council to form a committee to evaluate the Sign Code, to place enforcement of the Sign Code on hold until at least the end of the year, and to have a business expo. The City Council appointed seven Sign Code Review Committee members on May 11, 2009.

The Sign Code Review Committee's first meeting was on June 10, 2009, and meetings continued through December 16, 2009. During these meetings the Committee reviewed the Sign Code, the Design Standards, the sign permitting process, sign review procedures, enforcement of the Sign Code, safety issues, the Sunshine Laws, case law, and the public engagement results. The Building, Legal, Code Enforcement, Engineering, Public Works, Police, and Planning and Zoning Departments participated in the review and discussion of the proposed Sign Code update. The new Sign Code was approved on March 8, 2010 (Ordinance 10-08).

Note: On March 8, 2010 the City Council serving as the Board of Zoning Appeals requested that the City encourage commercial developments to apply for a Master Sign Program.

Chapter 158.296(B) states that in its consideration of a request for variance, the Planning and Zoning Board or the Zoning Administrator shall not utilize the existence of nonconforming use of neighboring lands, structures, or buildings in the same or adjacent zoning districts as grounds for the granting of a request for variance, nor shall the Planning and Zoning Board or the Zoning Administrator utilize any permitted use of lands, structures, or buildings within the same or adjacent zoning district as a basis for approval.

STAFF RECOMMENDATION:

The Planning and Zoning Department staff finds the requests to be inconsistent with variance criteria as stipulated in Chapter 158.295(C) of the Zoning Code and recommends denial.

(NOTE TO APPLICANT: Any request for a variance that is denied by the Planning and Zoning Board may be appealed to the Board of Zoning Appeals. Appeal applications are made through the City Clerk's office and must be submitted within 15 days after the Planning and Zoning Board hearing).

SITE LOCATION

CITY OF PORT ST. LUCIE
PLANNING & ZONING DEPT.

Prepared by:
M.I.S. DEPARTMENT

PZ2011.DWG

VARIANCE
PARCEL D
TOWN CENTER

DATE: 9/9/2011

APPLICATION NUMBER: P11-113

CADD FILE NAME: P11-113L

SCALE: 1" = .5 MI

SITE LOCATION

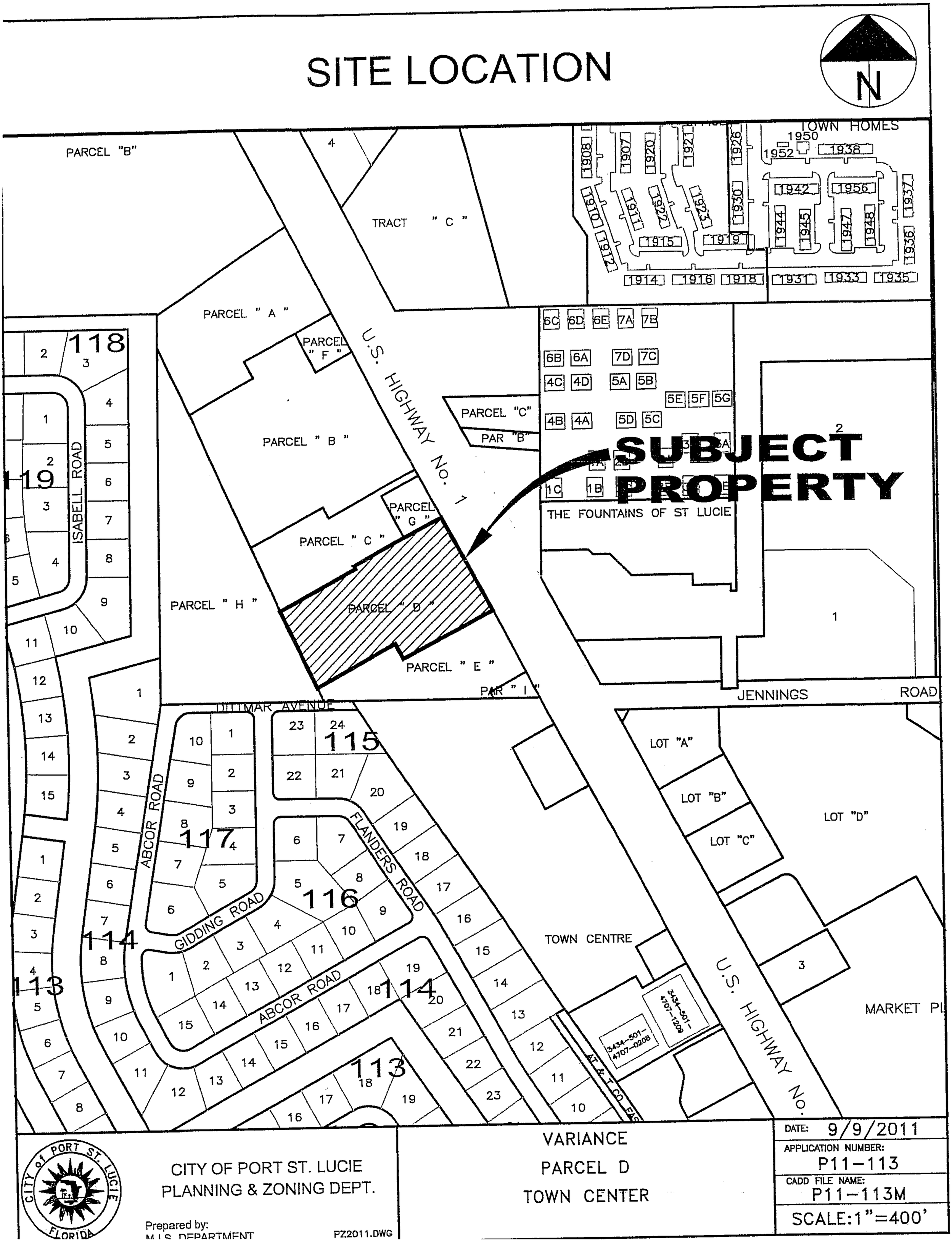

CITY OF PORT ST. LUCIE
PLANNING & ZONING DEPT.

Prepared by:
M.I.S. DEPARTMENT

PZ2011.DWG

VARIANCE
PARCEL D
TOWN CENTER

DATE: 9/9/2011

APPLICATION NUMBER: P11-113

CADD FILE NAME: P11-113M

SCALE: 1"=400'

SITE LOCATION

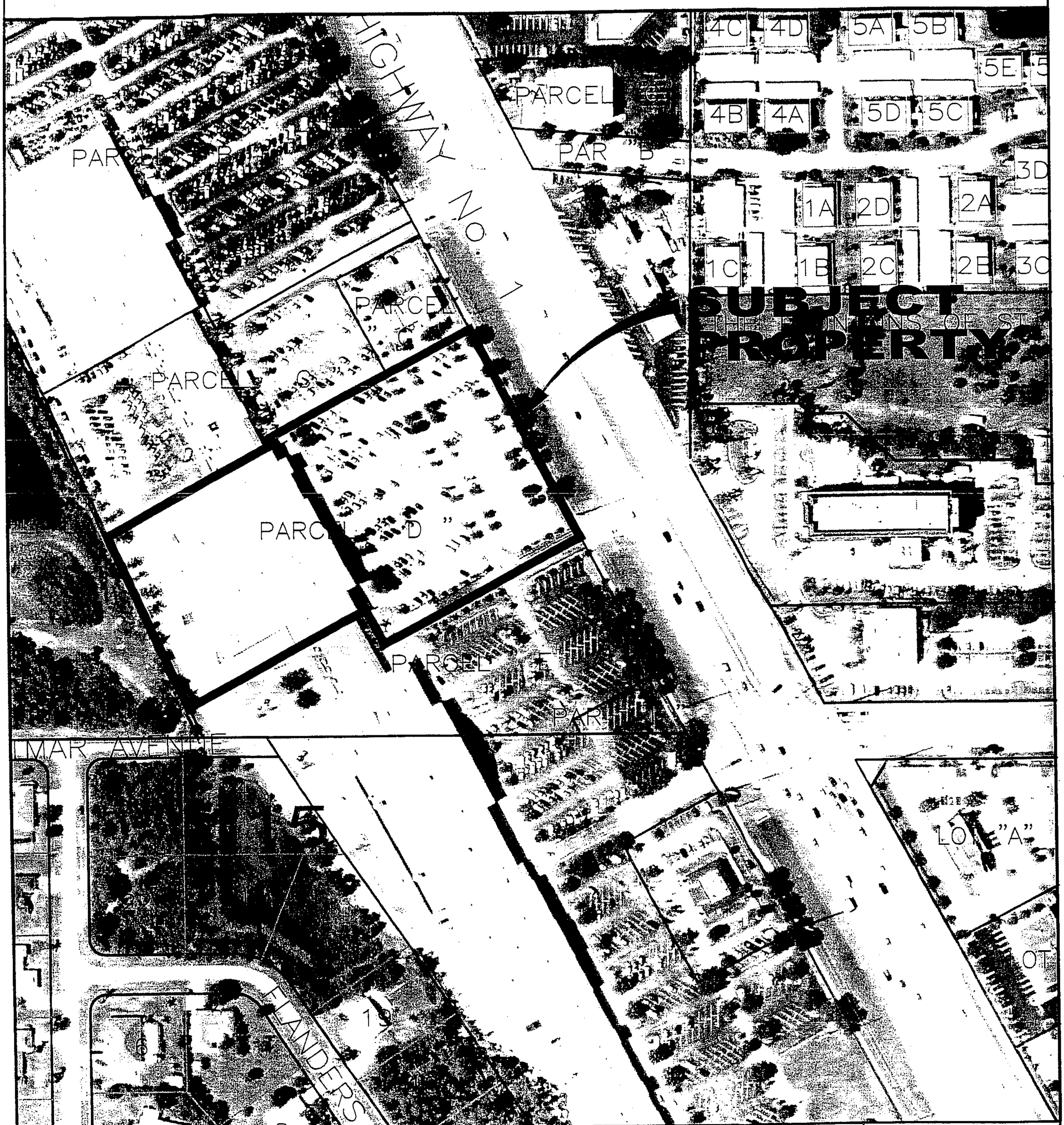

CITY OF PORT ST. LUCIE
PLANNING & ZONING DEPT.

Prepared by:
M.I.S. DEPARTMENT

PZ2011.DWG

VARIANCE
PARCEL D
TOWN CENTER
AERIAL JAN 2009

DATE: 9/9/2011

APPLICATION NUMBER: P11-113

CADD FILE NAME: P11-113A

SCALE: 1"=200'

FUTURE LAND USE

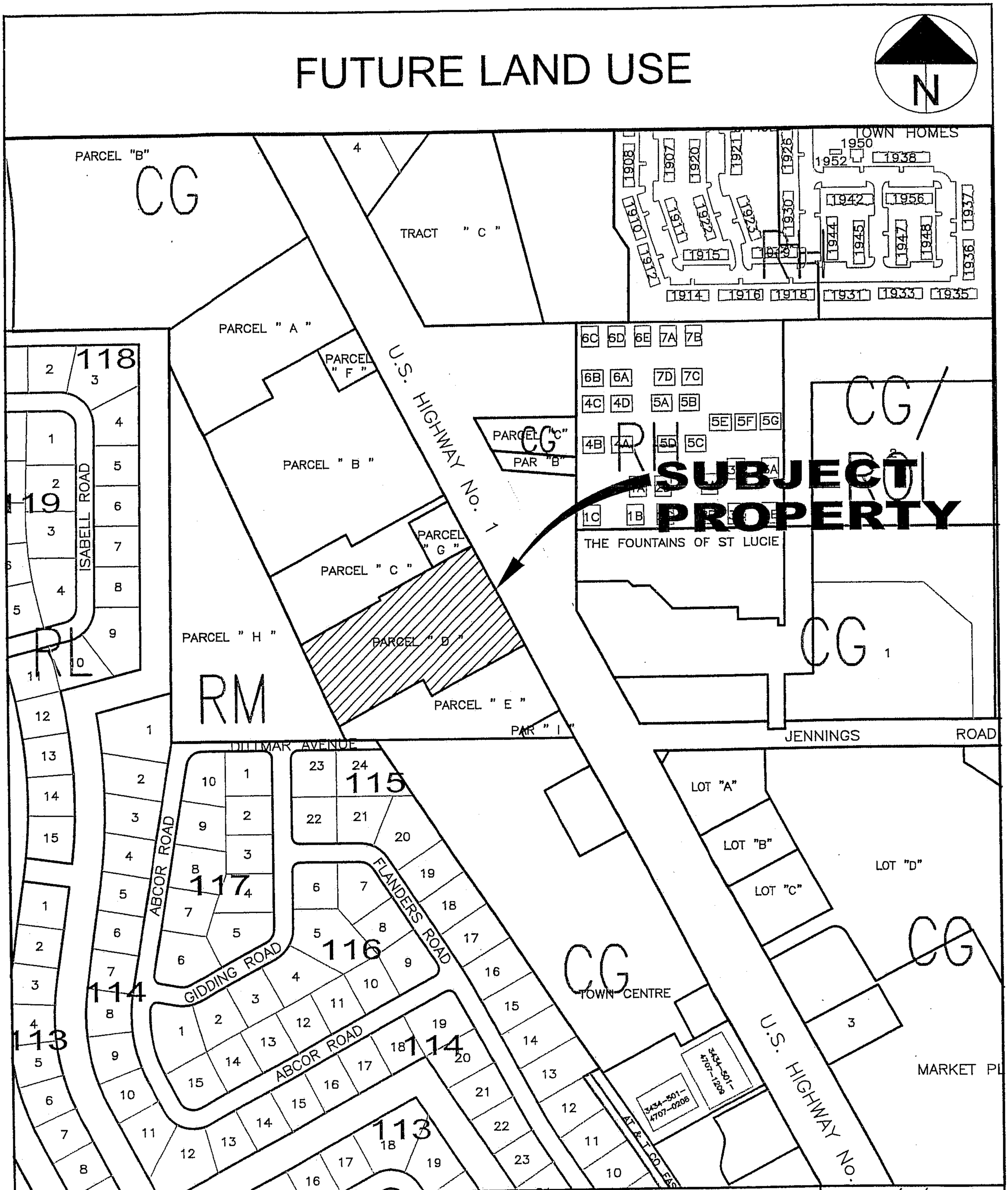

CITY OF PORT ST. LUCIE
PLANNING & ZONING DEPT.

Prepared by:
M.I.S. DEPARTMENT

PZ2011.DWG

VARIANCE
PARCEL D
TOWN CENTER

DATE: 9/9/2011

APPLICATION NUMBER: P11-113

CADD FILE NAME: P11-113M

SCALE: 1"=400'

EXISTING ZONING

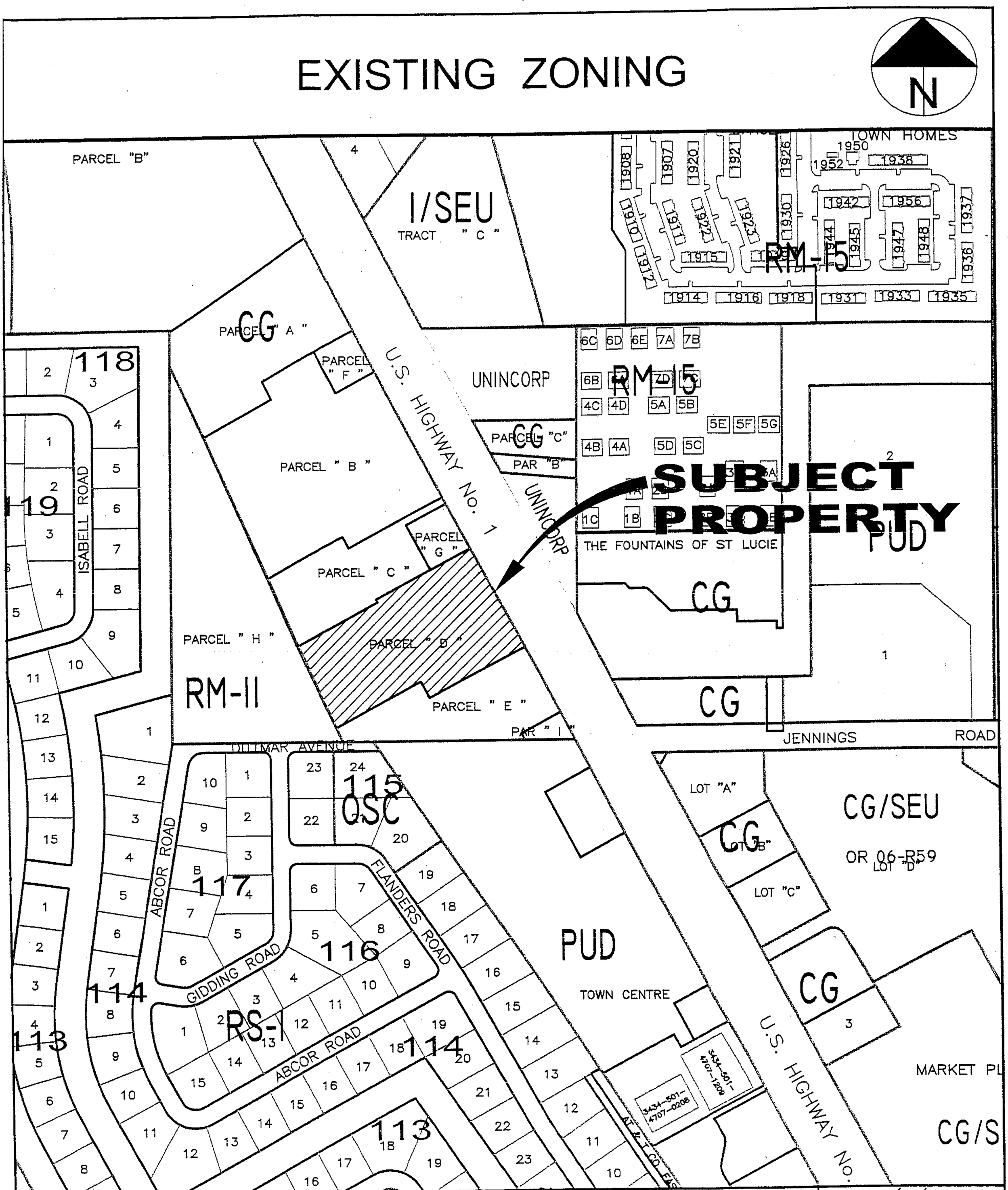

CITY OF PORT ST. LUCIE
PLANNING & ZONING DEPT.

Prepared by:
M.I.S. DEPARTMENT

PZ2011.DWG

VARIANCE
PARCEL D
TOWN CENTER

DATE:	9/9/2011
APPLICATION NUMBER:	P11-113
CADD FILE NAME:	P11-113M
SCALE:	1"=400'

September 7, 2011

Subject Property:

Save A Lot

10105 S. US Hwy 1

Port St Lucie, FL 34952

To Whom It May Concern,

The variance requested is to install a 5′ set of letters for the main identification wall sign for the tenant Save A Lot. The lease space is set back 415 feet from the public right of way. Visibility is further blocked due to the various planters of trees and landscaping that are located throughout the parking lot. Other businesses throughout the center are currently displaying wall signs that are much larger than what the current code would allow. These tenants include DD's Discounts (5 ft. sign), Bealls (8 ft. sign), and Staples(5 ft. sign). The code currently allows wall signage up to 24" in height. A sign that small in size would not be visible from the public right of way and would prove to be an unnecessary hardship to the tenant Save A Lot. The code currently allows up to 122 square feet of signage based on the business frontage. We are proposing 189 square feet of signage which would exceed the allowed limit.

The tenant's general intent in proceeding with this variance process is to allow for effective signage. Effective signage would further promote good business and consumer spending for the City of Port St. Lucie. The proposed sign would be in harmony with the existing signs within the center in size and design, and would not be detrimental to the public well fare. I appreciate your time and consideration in this matter.

Sincerely,

Barbara Rezende

VARIANCE APPLICATION

FOR OFFICE USE ONLY

Planning Dept P11-113
Fee (Nonrefundable)$ 1,635.00
Receipt # 11258

CITY OF PORT ST. LUCIE
Planning & Zoning Department
121 SW Port ST. Lucie Blvd.
Port St. Lucie, Florida 34984
(772)871-5212 FAX: (772)871-5124

Refer to "Fee Schedule" for application fee. Make check payable to the "City of Port St. Lucie". Fee is nonrefundable unless application is withdrawn prior to advertising for the Planning and Zoning Board meeting. **Attach two copies of proof of ownership (e.g., warranty deed, affidavit), a copy of recent survey and a statement addressing each of the attached criteria.**

PRIMARY CONTACT EMAIL ADDRESS: barbararaveli@yahoo.com

PROPERTY OWNER:

Name: Travis M. Molis
Address: 500 East Baybrook Ct. Boise, ID 83706
Telephone No.: 208-395-4371 Fax No.: 208-395-4625

APPLICANT (IF OTHER THAN OWNER, ATTACH AUTHORIZATION TO ACT AS AGENT):

Name: Barbara Rezende
Address: 1808 SW Biltmore Street, Port Saint Lucie, FL 34984
Telephone No.: 772-807-8417 Fax No.: 772-807-8478

RECEIVED
AUG 23 2011
PLANNING DEPARTMENT
CITY OF PORT ST. LUCIE, FL

SUBJECT PROPERTY:

Legal Description: Town Center Parcel D
Parcel I.D. Number: 440170100040003
Address: 10105 S. US Hwy 1 Port St. Lucie, FL 34952
Current Zoning Classification: CG (General Commercial)

Description of requested variance and applicable conditions/circumstances justifying request (continue on separate sheet, if necessary): Provide documentation that the attached variance criteria have been met.

The variance request is to install a set of 5' letters for the main identification wall sign for the tenant Save A Lot. The lease space is set back 415 feet from the public right of way and visibility is furthur blocked by landscaping within the center.

See Page 2 for additional information.

Barbara Rezende
Signature of Applicant

Barbara Rezende
Hand Print Name

8/23/11
Date

NOTE: Signature on this application acknowledges that a certificate of concurrency for adequate public facilities as needed to service this project has not yet been determined. Adequacy of public facility services is not guaranteed at this stage in the development review process. Adequacy for public facilities is determined through certification of concurrency and the issuance of final local development orders as may be necessary for this project to be determined based on the application material submitted.

H:\PZ\SHARED\APPLCTN\VARAPPL (06/21/11)

VARIANCE APPLICATION

FOR OFFICE USE ONLY

Planning Dept_____
Fee (Nonrefundable)$_____
Receipt #_____

CITY OF PORT ST. LUCIE
Planning & Zoning Department
121 SW Port ST. Lucie Blvd.
Port St. Lucie, Florida 34984
(772)871-5212 FAX: (772)871-5124

Refer to "Fee Schedule" for application fee. Make check payable to the "City of Port St. Lucie". Fee is nonrefundable unless application is withdrawn prior to advertising for the Planning and Zoning Board meeting. **Attach two copies of proof of ownership (e.g., warranty deed, affidavit), a copy of recent survey and a statement addressing each of the attached criteria.**

PRIMARY CONTACT EMAIL ADDRESS: _____

PROPERTY OWNER:

Name: Travis M. Molis

Address: 500 East Baybrook Ct. Boise, ID 83706

Telephone No.: 208-395-4371 Fax No.: 208-395-4625

APPLICANT (IF OTHER THAN OWNER, ATTACH AUTHORIZATION TO ACT AS AGENT):

Name: _____

Address: _____

Telephone No.: _____ Fax No.: _____

SUBJECT PROPERTY:

Legal Description: Town Center Parcel D

Parcel I.D. Number: 440170100040003

Address: 10105 S. US Hwy 1 Port St. Lucie, FL 34952

Current Zoning Classification: CG (General Commercial)

Description of requested variance and applicable conditions/circumstances justifying request (continue on separate sheet, if necessary): Provide documentation that the attached variance criteria have been met.

The variance request is to install a set of 5' letters for the main identification wall sign for the tenant Save A Lot. The lease space is set back 415 feet from the public right of way and visibility is furthur blocked by landscaping within the center. The code as it stands allows for 24" letters and we are requesting a letter height of 5 feet. The code allows up to 122 square feet of signage based on our business frontage. We are currently proposing 189 square feet which would deviate from the current sign ordinance.

Signature of Applicant | Hand Print Name | Date

NOTE: Signature on this application acknowledges that a certificate of concurrency for adequate public facilities as needed to service this project has not yet been determined. Adequacy of public facility services is not guaranteed at this stage in the development review process. Adequacy for public facilities is determined through certification of concurrency and the issuance of final local development orders as may be necessary for this project to be determined based on the application material submitted.

H:\PZ\SHARED\APPLCTN\VARAPPL (06/21/11)

§ 158.295 PLANNING AND ZONING BOARD OR ZONING ADMINISTRATOR (DIRECTOR OF PLANNING AND ZONING) TO HEAR VARIANCES; POWERS AND DUTIES OF BOARD AND ZONING ADMINISTRATOR

(C) Duties of the Zoning Administrator and Planning and Zoning Board in authorizing a variance. The Planning and Zoning Board and Zoning Administrator may authorize the variance from the provisions of this chapter as will not be contrary to the public interest when, owing to special conditions, a literal enforcement of the provisions will result in unnecessary and undue hardship. In order to authorize any variance from the terms of this chapter, the Planning and Zoning Board or Zoning Administrator should consider:

(1) That special conditions and circumstances exist which are peculiar to the land, structure, or building involved and which are not applicable to other lands, structures, or buildings in the same zoning district;

(2) That the special conditions and circumstances do not result from any action of the applicant;

(3) That granting the variance requested will not confer on the applicant any special privilege that is denied by this chapter to other lands, buildings, or structures, in the same zoning district;

(4) That literal interpretation of the provisions of the chapter would deprive the applicant of rights commonly enjoyed by other properties in the same zoning district under the terms of the chapter and would work unnecessary and undue hardship on the applicant;

(5) That the variance granted is the minimum variance that will make possible the reasonable use of the land, building, or structure;

(6) That the granting of the variance will be in harmony with the general intent and purpose of the chapter and that the variance will not be injurious to the area involved or otherwise detrimental to the public welfare;

(7) That there will be full compliance with any additional conditions and safeguards which the Planning and Zoning Board or Zoning Administrator may prescribe, including but not limited to reasonable time limits within which the action for which variance is required shall be begun or completed, or both.

VARIANCES

The Planning and Zoning Board and Zoning Administrator may authorize the variance from the provisions of this chapter as will not be contrary to the public interest when, owing to special conditions, a literal enforcement of the provisions will result in unnecessary and undue hardship. In order to authorize any variance from the terms of this chapter, the Planning and Zoning Board or Zoning Administrator will consider the variance criteria in **§ 158.295 (C) 1-7 and consider your responses to the following when making a determination.**

(1) Please explain special conditions and circumstances that exist which are peculiar to the land, structure, or building involved and which are not applicable to other lands, structures, or buildings in the same zoning district;

The building is located 415 feet from the public right of way. There are trees in the landscaping that are obstructing the view of the store front fascia.

(2) Please explain if these conditions and circumstances result from actions by the applicant;

These conditions do not result from actions of the applicant as the buildings were built by others.

(3) Please explain how granting the variance requested will not confer on the applicant special privilege that is denied by this chapter to other lands, buildings, or structures, in the same zoning district;

Many businesses are located adjacent or close to the public right of way and do not share the disadvantage of being set back a considerable distance and therefore limiting the visibility of their signage.

(4) Please explain how a literal interpretation of the provisions of the chapter would deprive the applicant of rights commonly enjoyed by other properties in the same zoning district under the terms of the chapter and would work unnecessary and undue hardship on the applicant;

Other businesses within the same center are currently displaying wall signs that are much larger than the current code allows ranging from 5 feet to 8 feet in height. It is our feeling that a 24" sign would not be visible from the public right of way and therefore would be an unnecessary and undue hardship on Save A Lot.

(5) Please illustrate and explain if the variance requested is the minimum variance that will make possible the reasonable use of the land, building, or structure;

Due to the 415 foot setback and proliferation of the trees in the current landscaping, we feel that a 5 foot letter is reasonable and the minimum that would be acceptable.

(6) Please indicate how granting variance will be in harmony with the general intent and purpose of the chapter and that granting the variance will not be injurious to the area involved or otherwise detrimental to the public welfare;

The general intent and purpose of the chapter is to allow effective signage. The proposed sign would be in harmony with the existing signs within the center in size and design, and would not be detrimental to the public well fare.

(7) Please indicate that there will be full compliance with any additional conditions and safeguards which the Planning and Zoning Board or Zoning Administrator may prescribe, including but not limited to reasonable time limits within which the action for which variance is required shall be begun or completed, or both.

Save A Lot will be fully compliant with any additional conditions and safeguards which the planning and zoning board or Z.A. may prescribe. Including but not limited to reasonable time limits within which the action for which variance is required.

Barbara Rezende
Signature of Applicant

Barbara Rezende
Hand Print Name

8/23/11
Date

1528144

EDWIN M. FRY, Jr., CLERK OF THE CIRCUIT COURT
SAINT LUCIE COUNTY
FILE # 2891123 07/06/2006 at 12:04 PM
OR BOOK 2605 PAGE 2161 - 2166 Doc Type: DEED
RECORDING: $52.50
D DOC STAMP COLLECTION: $33110.00

Add to 5

RETURN TO:
FIDELITY NATIONAL TITLE
INSURANCE COMPANY
ATTN: C. SELFRIDGE
5690 W. Cypress St., Ste A
Tampa, FL 33607
NAPS / FNT File No NT06-0605

DRAFTED BY AND AFTER
RECORDING RETURN TO:

SCHULTE ROTH & ZABEL LLP
919 Third Avenue
New York, New York 10022
Attention: Bruce Cybul

WARRANTY DEED

Date: June 2, 2006
Unit No.: **1528**

Tax Parcel/Folio Number: **TPN: 4401-701-0004-000-3**

For valuable consideration, EXTREME LLC, a limited liability company under the laws of Delaware, Grantor, whose address is 250 East Park Center Blvd., Boise, Idaho 83726, by conversion from EXTREME INC., a Delaware corporation, by these presents does hereby grant, bargain, sell, warrant and convey to EXT Owner LLC, Grantee, whose address is 250 East Park Center Blvd., Boise, Idaho 83726, a limited liability company under the laws of Delaware, real property in St. Lucie County, Florida, described as follows:

See Exhibit A attached hereto and made a part hereof,

together with all hereditaments and appurtenants belonging thereto (collectively, the "Property"), subject to the following encumbrances:

See Exhibit B attached hereto and made a part hereof,

to have and to hold the same, unto Grantee, in fee simple, forever.

2137238

Grantor hereby covenants with Grantee that Grantor is lawfully seized of the Property in fee simple and that Grantor has good right and lawful authority to sell and convey the Property. Grantor hereby warrants the title to the Property. Grantor warrants that the Property is free of all encumbrances except those described on Exhibit B.

In the case of any breach of Grantor's warranties herein contained, whether such warranties are express or implied, the liability of Grantor shall be limited to Grantor's interest in the Property hereby conveyed (immediately prior to the conveyance described in this Warranty Deed) and all amounts (collectively, "Indemnified Amounts") which are recovered from the non-affiliated transferors prior to Grantor in the Property's chain of title ("Prior Transferors") or pursuant to any title insurance policies for the Property existing prior to the date of this Warranty Deed ("Pre-Existing Title Policy").

Grantor irrevocably assigns to Grantee all of Grantor's right, title and interest in and to all Indemnified Amounts, including without limitation all claims, actions, rights of recovery and indemnity, losses, damages, expenses and fees (including, without limitation, reasonable attorneys' fees and court costs), at law, in equity or by contract, which Grantor may now or hereafter have against any and all Prior Transferors or under any Pre-Existing Title Policy, and Grantor hereby irrevocably designates and appoints Grantee as Grantor's attorney-in-fact, coupled with an interest, with respect to all Indemnified Amounts.

Notwithstanding any provision herein to the contrary, the warranties and covenants contained herein shall be solely for the benefit of and enforceable by Grantee hereunder and for no other party including heirs, successors and assigns of Grantee and under no circumstances shall such warranties and covenants be deemed to run with the land.

Without limiting the foregoing provisions of this Warranty Deed, if Grantee makes any claim against Grantor as the result of any alleged breach of any covenants or warranties in this Warranty Deed, upon Grantor's receipt of Grantee's written notice of such breach to the address set forth below, Grantor shall either (i) make and diligently pursue all claims against the Prior Transferors and against any title insurance company under any applicable Pre-Existing Title Policy, or (ii) permit Grantee, in the name of Grantor, to make any or all such claims, in all cases at the sole cost and expense of Grantee, including without limitation counsel selected and retained by Grantee as is reasonably acceptable to Grantor. If Grantor is named by any third-party in any proceeding in connection with any such claim, Grantee (at Grantee's sole cost) shall with counsel reasonably acceptable to Grantor defend and procure the dismissal of Grantor from such proceeding (subject to the requirements of law in connection with pursuing the claims against the Prior Transferors and the title insurance company, as applicable).

Grantor's address for notice pursuant to the immediately foregoing paragraph is:

250 East Park Center Blvd.
Boise, Idaho 83726

IN WITNESS WHEREOF, Grantor has executed and delivered this Warranty Deed to Grantee as of the date first written above.

Signed, sealed and delivered in the presence of these witnesses:

Tammy Justice-Fleming
Print Name: Tammy Justice-Fleming

Wanda Tschiegi
Print Name: WANDA TSCHIEGI

GRANTOR:

EXTREME LLC

By: _____
Name: Susan McMillan
Title: AUTHORIZED SIGNATORY

Unit No.: 1528

10150206.1

Florida

STATE OF NEW YORK)
) ss.
COUNTY OF NEW YORK)

The foregoing Warranty Deed was acknowledged before me this 1st day of June, 2006, by Susan McMillan, the Authorized Signatory of EXTREME LLC, a Delaware limited liability company, on behalf of the EXTREME LLC, who is personally known to me or produced a state license to drive as identification, and did not take an oath.

[NOTARY SEAL]

Notary Public
Print Name:

My Commission expires:

April 3, 2010

JOSEPH A. SARCINELLA
Notary Public, State of New York
No. 02SA6039567
Qualified in Westchester County
Commission Expires April 3, 20 10

10150206.1

Florida

EXHIBIT A

A parcel of land lying in Section 1, Township 37 South, Range 40 East, St. Lucie County, Florida, more particularly described as follows:

Commence at the Point of Intersection of the East line of the Plat of South Port St. Lucie Unit Four, as recorded in Plat Book 13, Page 11-B, Public Records of St. Lucie County, Florida also being the East line of the Southwest one-quarter (1/4) of the Southwest one-quarter of said Section 1 and the South line of the Plat of South Port St. Lucie Section Fifteen, as recorded in Plat Book 16, page 42-F, Public Records of St. Lucie County, Florida also being the South line of the Northeast one-quarter (1/4) of the Southwest one-quarter (1/4) of said Section 1 point of intersection being the Southwest corner of the Northeast one-quarter of the Southwest one-quarter (1/4) of said Section 1; thence South 56°45'42" East 536.97 feet to the Point of Intersection with the Westerly right-of-way line of U.S. Highway No. 1 (State Road No. 5); thence South 27°53'44" East, along said Westerly right-of-way line 1133.20 feet to the Point of Beginning.

Thence continue South 27°53'44" East, along said Westerly right-of-way line, a distance of 361.00 feet; thence South 62°06'16" West 344.00 feet; thence North 27°53'44" West 58.95 feet; thence South 62°06'16" West 313.27 feet; thence North 24°43'49" West 292.12 feet; thence North 62°06'16" East 297.14 feet; thence North 27°53'44" West 10.38 feet; thence North 62°06'16" East 344.00 feet to the Point of Beginning.

Together with the benefits, if any, as set forth in Rights and Easements (created in Instrument entitled Easements with Covenants and Restrictions Affecting Land (ECR) dated October 3, 1984, in the Official Record Book 483, Page 1512 and amended per Instrument dated November 14, 1985, in the Official Record Book 484, Page 1165 and Instrument dated March 1, 1994, in the Official Record Book 887, Page 0793.

Tax Parcel No. 4401-701-0004-000-3

EXHIBIT B

Permitted Exceptions

1. Real estate taxes and special assessments that are not delinquent as of the date of this Warranty Deed.

2. Easements, covenants, conditions and restrictions that do not interfere with the current use and occupancy of the Property.

EXT Owner LLC
c/o Albertson's LLC.
250 Parkcenter Blvd.
Boise, ID 83706

August 17, 2011

Planning and Zoning Department
City of Port St. Lucie
121 S. W. Port St. Lucie Blvd., Building A
Port St. Lucie, FL 34984

Re: Save-A-Lot: Signage Approval

Ladies and Gentlemen:

Effective July 22, 2011, EXT Owner LLC ("Albertson's"), a Delaware limited liability company, as the lessor, and MORAN FOODS, INC., a Missouri corporation, d/b/a Save-A-Lot, Ltd. ("SAL"), as lessee, entered into a "Lease" for a portion of Albertson's Store #1528, located at 10105 South U. S. Highway 1, Port Saint Lucie, Florida (the "Premises"). Under the terms of the Lease, SAL is permitted to install certain signage upon the Premises, as shown on the attached "Sign Plan." Albertson's has reviewed and approved the signage set forth in the Sign Plan and consents to the installation of the same by SAL according to the Lease, the design and at the locations shown on the Sign Plan.

Thank you for your assistance in processing SAL's signage request and application. This letter is provided as a courtesy to the City of Port St. Lucie to assist SAL in obtaining approval for its signage and is not intended to change the terms of the Lease, which shall govern the relationship between Albertson's and SAL.

Please do not hesitate to let me know if you have any questions or comments. My direct dial number is (208) 395-4371.

Very Truly Yours,

EXT Owner LLC

Travis M. Molis
Manager of Corporate Real Estate

Enclosure

EXT Owner LLC
c/o Albertson's LLC
250 Parkcenter Blvd.
Boise, ID 83706

August 22, 2011

Planning and Zoning Department
City of Port St. Lucie
121 S. W. Port St. Lucie Blvd., Building A
Port St. Lucie, FL 34984

Re: Save-A-Lot: Signage Approval

Ladies and Gentlemen:

EXT Owner LLC previously provided a signage approval letter on August 17, 2011. A copy is attached. This letter confirms that Barbara Rezende of Mineola Signs is authorized to act as our agent to file for a sign variance for signage in conformity with our August 17, 2011 letter.

Should you have questions, please telephone Travis Molis at 208.395.4371.

Very Truly Yours,

EXT Owner LLC

Susan A. McMillan
Authorized Signatory

Enclosure
cc: Travis Molis
Julie.A.Stenger@save-a-lot.com

18.0989'

10.2917'

(A) FRONT VIEW @ CHANNEL LETTERS (186.25 SQ. FT.)
Scale: 3/8"=1'-0"

10.2917' × 18.0989' = 186.26844913 ☆ = 186 ☆

RECEIVED
SEP 23 2011
PLANNING DEPARTMENT
CITY OF PORT ST. LUCIE, FL

"Save" Channel Letters
.063 Alum. 5" returns PTM PMS 186c Red
.080 Alum. backs
3/16" Plexi Faces #2793 Red
2" Red Jewelite Trimcap
Illuminated by US LED Red LED illumination

"a Lot" Channel Letters
.063 Alum. 5" returns PTM PMS 288c Blue
.080 Alum. baks
3/16" Plexi Faces #7328 with vinyl overlay 3M #3630-157 Sultan Blue copy with 3/4" white outline (halo)
1" chrome Jewelite Trimcap
Illuminated by US LED Point White *No Exceptions*

COLOR SPECS:

"SAVE" COPY: 3M 3630-33 RED

"A LOT" COPY: 3M 3630-157 SULTAN BLUE

CUSTOM PRODUCT

This product is to be manufactured using custom specifications. Please refer to all specifications on this page.

COAST SIGN INCORPORATED
1500 West Embassy St. Anaheim, CA 92802
(714) 520-9144 FAX: (714) 520-5847

Date: 09-07-11	Project Name: Save a Lot		
Scale: Noted	Address: 10105 S US Hwy 1		
Drawn: Chris C.	City / State: Port St. Lucie, FL		
Sales: CB	Client Approval:	Date:	

This is an original unpublished drawing created by Coast Sign, Inc. It is submitted for your personal use in conjunction with a project being planned for you by Coast Sign, Inc., And shall not be reproduced, used by or disclosed to any firm or corporation for any purpose whatsoever without written permission.

No.	Designer	Date	Revision Notes
1	HA	09-22-11	Revised square footage callout, added dimensions.
2			
3			
4			
5			
6			

DESIGN DRAWING 3 of 3
Request Number:
DEV-SVLT-00010-r1
File Location:
W:\Save A Lot\Art\Drawings\DEV-SVLT-00010

11 X 17 TEMPLATE VERSION 7.0

DETAIL @ CHANNEL LETTERS

A FRONT VIEW @ CHANNEL LETTERS

.063 Alum. 5" returns PTM PMS 186c Red
.080 Alum. backs
3/16" Plexi Faces #2793 Red
2" Red Jewelite Trimcap
Illuminated by US LED Red LED illumination

"a Lot" Channel Letters
.063 Alum. 5" returns PTM PMS 288c Blue
.080 Alum. baks
3/16" Plexi Faces #7328 with vinyl overlay 3M #3630-157 Sultan Blue copy with 3/4" white outline (halo)
1" chrome Jewelite Trimcap
Illuminated by US LED Point White 'No Exceptions'

COLOR SPECS:

"SAVE" COPY: 3M 3630-33 RED

"A LOT" COPY: 3M 3630-157 SULTAN BLUE

CUSTOM PRODUCT

This product is to be manufactured using custom specifications. Please refer to all specifications on this page.

COAST SIGN
INCORPORATED
1508 West Embassy St. Anaheim, CA 92802
(714) 528-9144 FAX: (714) 528-5847

Date: 09-07-11	Project Name: Save a Lot
Scale: Noted Scale: 3/8" = 1'-0"	Address: 1905 S US Hwy 1
Drawn: Chris C.	City / State: Port St Lucie, FL
Sales: CB	Client Approval: Date:

This is an original unpublished drawing created by Coast Sign, Inc. It is submitted for your personal use in conjunction with a project being planned for you by Coast Sign, Inc., And shall not be reproduced, used by or disclosed to any firm or corporation for any purpose whatsoever without written permission.

No.	Designer	Date	Revision Notes
1			
2			
3			
4			
5			
6			

DESIGN DRAWING 3 of 3

Request Number:
DEV -SVL T-00010

File Location:
W:\Save A Lot\Drawings\DEV -SVL T-00010

11 X 17 TEMPLATE VERSION 7.0

EXISTING

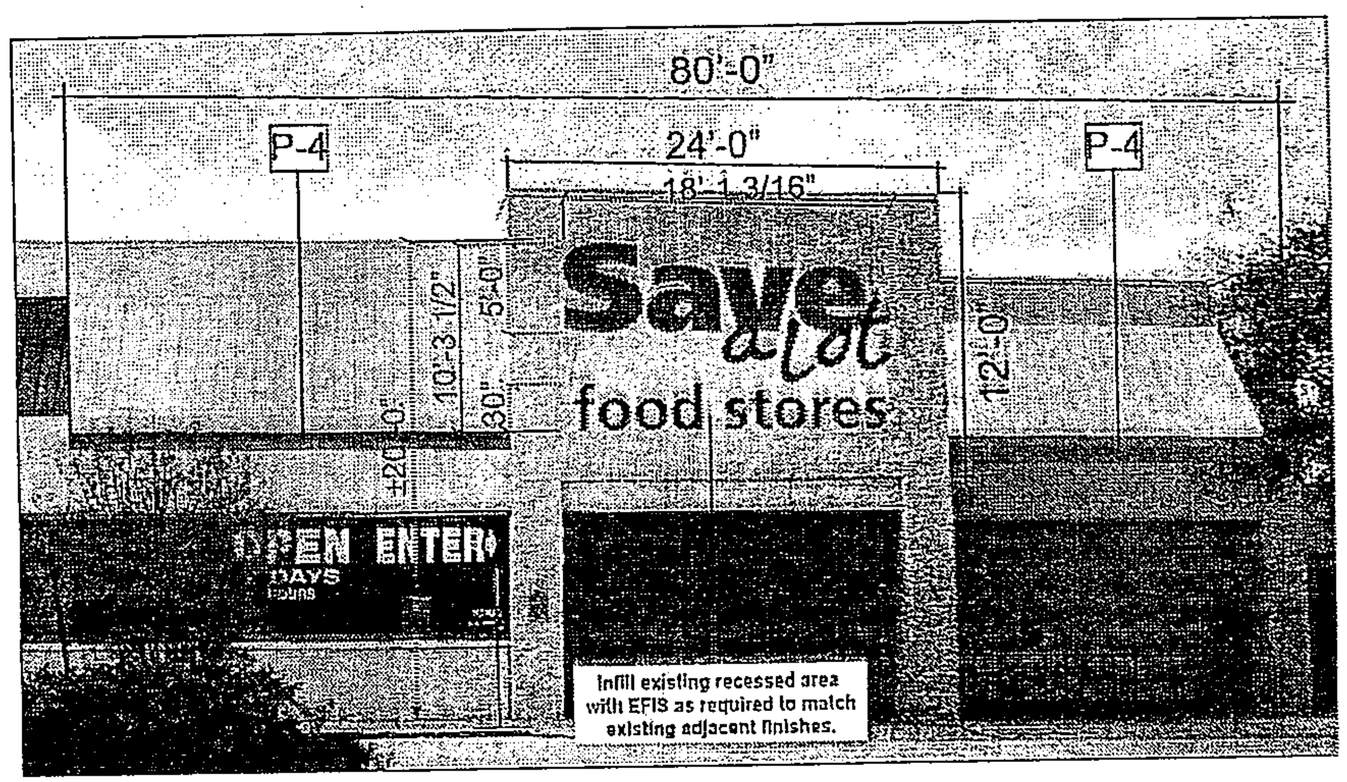

PROPOSED

288 S.F. - Overall Space - Signage = 186.25 S.F.
5' Letter Set with 30" food stores underneath

RECEIVED
SEP 23 2011
PORT ST. LUCIE

COAST SIGN
INCORPORATED
1500 West Embassy St. Anaheim, CA 92802
(714) 520-9144 FAX: (714) 520-5847

Date:	09-07-11
Scale:	NTS
Drawn:	Chris C.
Sales:	CB
Project Name:	Save a Lot
Address:	10105 S US Hwy 1
City / State:	Port St. Lucie, FL
Client Approval:	Date:

This is an original unpublished drawing created by Coast Sign, Inc. It is submitted for your personal use in conjunction with a project being planned for you by Coast Sign, Inc., And shall not be reproduced, used by or disclosed to any firm or corporation for any purpose whatsoever without written permission.

No.	Designer	Date	Revision Notes
1	HA	09-22-11	Revised square footage callout, added dimensions.
2			
3			
4			
5			
6			

DESIGN DRAWING 2 of 3

Request Number:
DEV-SVLT-00010-r1

File Location:
W:\Save A Lot\Art\Drawings\DEV-SVLT-00010

11 X 17 TEMPLATE VERSION 7.0

SITE PLAN

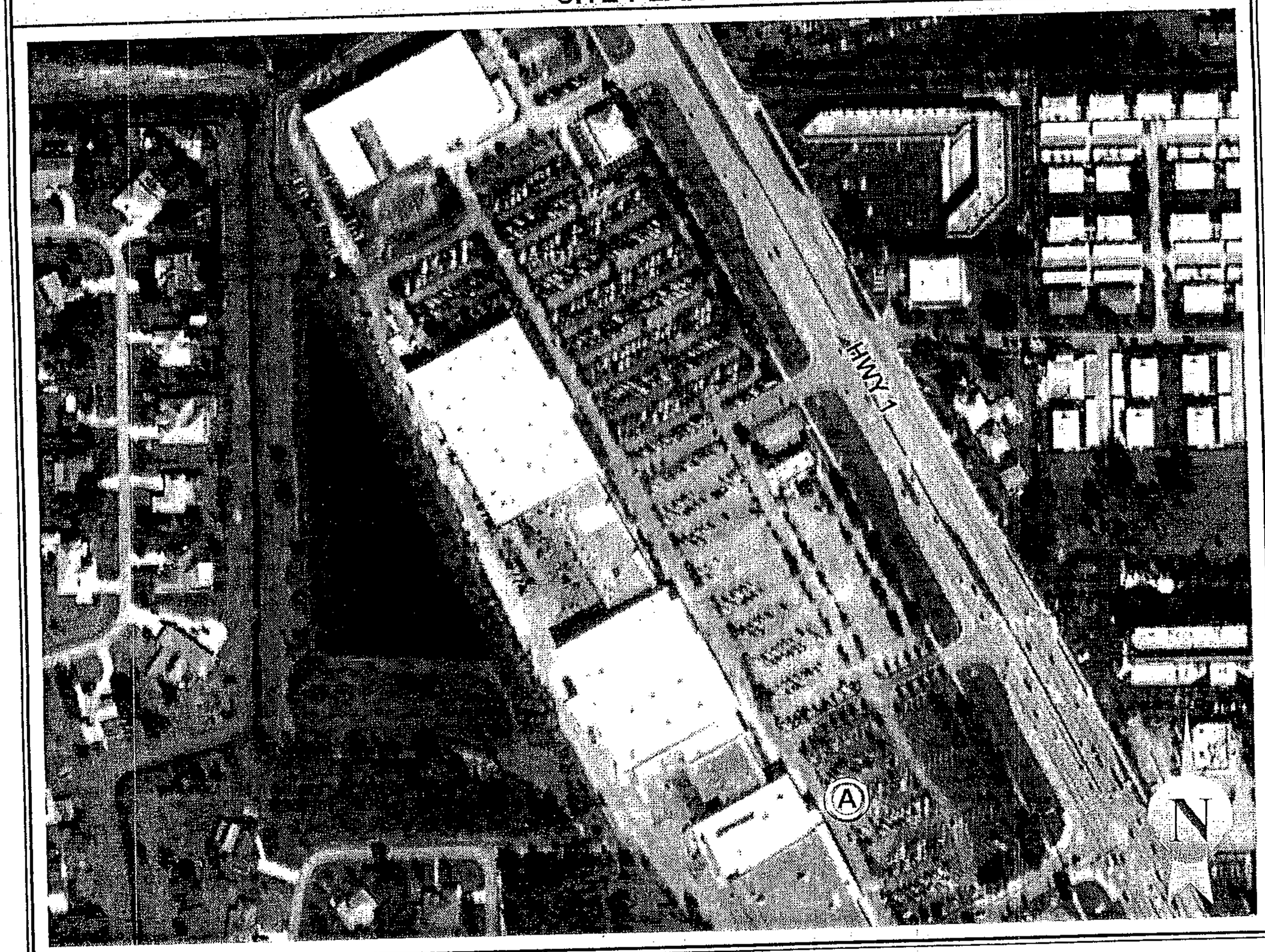

SIGNAGE SPECIFICATIONS

(A) ILLUMINATED CHANNEL LETTERS

RECEIVED
SEP 23 2011
PLANNING DEPARTMENT
CITY OF PORT ST. LUCIE, FL

COAST SIGN
INCORPORATED
1500 West Embassy St. Anaheim, CA 92802
(714) 520-9144 FAX: (714) 520-5847

Date: 09-07-11	Project Name: Save a Lot
Scale: NTS	Address: 10105 S US Hwy 1
Drawn: Chris C.	City / State: Port St. Lucie, FL
Sales: CB	Client Approval: Date:

This is an original unpublished drawing created by Coast Sign, Inc. It is submitted for your personal use in conjunction with a project being planned for you by Coast Sign, Inc., And shall not be reproduced, used by or disclosed to any firm or corporation for any purpose whatsoever without written permission.

No.	Designer	Date	Revision Notes
1	HA	09-22-11	Revised square footage callout, added dimensions.
2			
3			
4			
5			
6			

DESIGN DRAWING 1 of 3

Request Number:
DEV-SVLT-00010-r1

File Location:
W:\Save A Lot\Art\Drawings\DEV-SVLT-00010

11 X 17 TEMPLATE VERSION 7.0

Size that the code Allows.

Size that the code allows.

Save-a-lot location

Save-a-lot location

Surrounding Stores

Surrounding Stores

Surrounding Stores

Surrounding Stores

surrounding stores

EXHIBIT F

LESSEE'S SIGN CRITERIA

Proposed

Pylon rendering will be proved upon verification of the pylon face measurements. Do not order until approved pylon rendering has been provided.

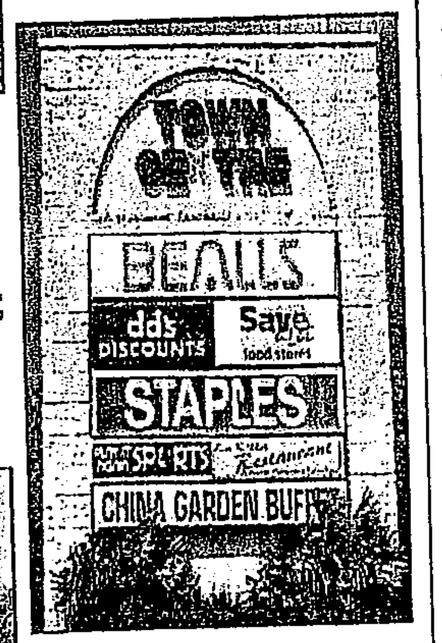

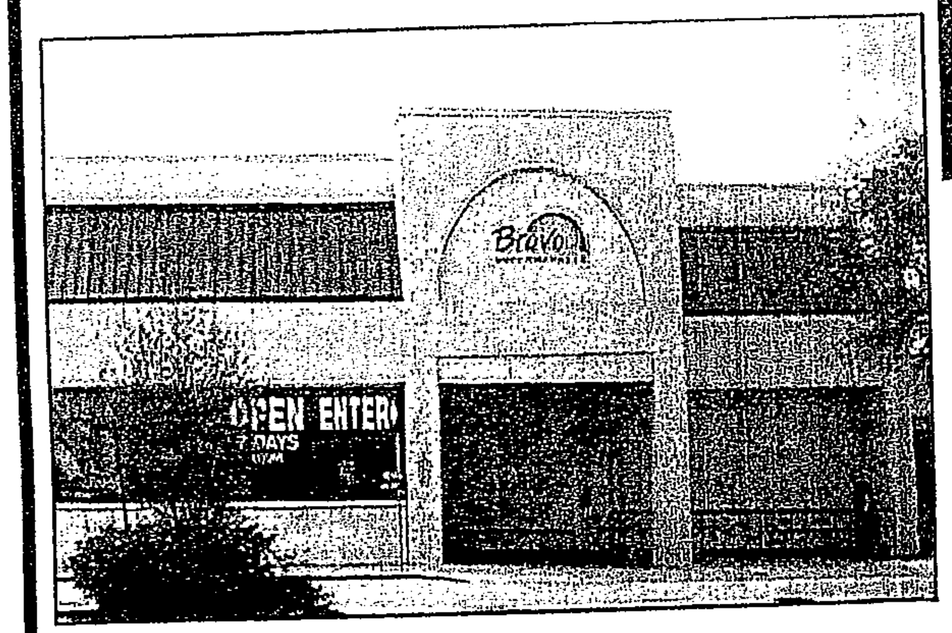

Current

APPROVAL VALID FOR 90 DAYS FROM THE LAST RENDERING DATE

FL Port St. Lucie (S. US Hwy. 1)

Corporate

Signage Requested: Request sign quote from Equipment Dept.

- ☐ 6' Letter Package. 30" "food stores".
- ☑ 5' Letter Package. 30" "food stores".
- ☐ 4' Letter Package. 24" "food stores".
- ☐ New Pylon Medium: 12'x6' Does not include Pole (recommend 25' Pole)
- ☐ Large: 16'x8' Does not include Pole (recommend 35' Pole)
- ☑ Re-face Existing Pylon (1)
- ☐ Red Metal Stripe. Bit Sections

Comments

1. Paint facade to match existing adjacent color. Patch and repair as required to provide a smooth surface for new painted finish

2. Place the baseline of "food stores" 1'-8" below the baseline of "Save". Place "food stores" 14" to the right of the Save-a-Lot letter set. The baseline of "food stores" is aligned with the bottom of the red stripe. Finish as specified

3. Infill existing recessed area with EIFS as required to match existing adjacent finishes.

4. Please advise if code requirements require alternate signage solution.

Architectural documents for construction of façade and final placement of signage to be forwarded to Save-A-Lot for review and approval prior to the start of construction.

	Part Name	Color	Dryvit/Finish
C-1	Field	Light Gray	Amcon 536 Snowdrift or Equivalent
C-2	Base	Dark Gray	Amcon 542 Aggezir or Equivalent
D-1	Tower	Warm Beige	EIFS Dryvit 463A Stophs Mood
D-2	Field	Grey White	EIFS Dryvit 103 Natural White. Hardie Board or Equivalent
D-3	Base*	Dark Brown	EIFS Dryvit 142 Spectrum Brown
M-1	Tower Roof/Cap	Silver Grey	UNA-CLAD Sandstone or Equivalent
P-1	Tower	Warm Beige	SW6371 Vanillin **
P-2	Field	Grey White	SW7029 Agreeable Gray **
P-3	Base*	Dark Brown	SW7031 Mega Greige**
P-4	Stripe	Red	SW4081 Safety Red **
P-5	Tower Roof/Cap	Silver Grey	SW4026 Slate Gray **
P-6	Canopy	Grey	SW7030 Anow Gray **

*Base height typically to correspond with window sill height (P-4) or at 36" if not site

** Refer to the Corporate Branding & Store Decor book for "Pratt & Lambert" & "Benjamin Moore" paint specs

REV. 5			
REV. 4			
REV. 3			
REV. 2	3/15/11	Revised paint	ADAMCSEK
REV. 1	4/21/10	APPROVED	SCHEVE
SUBMIT	4/1/10		
REV:	DATE:	COMMENTS:	REQSTED BY:

SAL REPRESENTATIVE NEIL KIRCHOFF
SAL STORE OWNER CORPORATE

CITY CODE

LANDLORD RESTRICTIONS:

Save a lot food stores
100 CORPORATE OFFICE DR.
EARTH CITY, MO 63045
PHONE: (314) 522-0150

inconsistent with the variance criteria and for denial. Mr. Gardner **seconded** the motion. The **motion passed** by roll call vote, with Mr. Gardner, Mr. Ojito, Mr. Blazak, Chair Parks, and Vice Chair Rooksberry voting in favor, and Mr. Martin and Mr. Battle voting against. Mr. Holbrook noted that if the applicant wishes to appeal they will have to apply to the City Clerk.

CITY OF PORT ST. LUCIE

CITY CLERK'S OFFICE

A CITY FOR ALL AGES

"A City for All Ages"

October 17, 2011

CERTIFIED MAIL

Mineola Signs
1808 SW Biltmore Street
Port St. Lucie, FL 34984

Dear Ms. Rezende,

RE: ZONING APPEAL 11-4, Appeal the decision of the Planning & Zoning Board of October 4, 2011, to deny granting a variance request for Save-A-Lot at Town Center to Chapter 155, Table 1, of the City of Port St. Lucie Sign Code for a variance of the allowable maximum square footage and maximum letter height, P10-113.

Please consider this a notice of **Public Hearing** before the City Council serving as Board of Zoning Appeals to be held on **Monday, November 21, 2011, at 1:30 p.m.** or as closely thereafter as business permits, at the Port St. Lucie Council Chambers, 121 SW Port St. Lucie Boulevard, Port St. Lucie, Florida.

Any back-up material you wish to have put into the meeting packet should be in the City Clerk's office by 12:00 noon on Wednesday, November 16, 2011.

If you should have any questions, please do not hesitate to contact me at 871-5157.

Sincerely,

Karen A. Phillips

Karen A. Phillips, CMC
City Clerk

cc: Daniel Holbrook, Director Planning & Zoning
Pam E. Hakim, Assistant City Attorney
Katherine H. Huntress, Planner

RECEIPT

CITY OF PORT ST. LUCIE
CITY CLERK'S OFFICE
121 SW Port St. Lucie Blvd. Port St. Lucie, FL 34984
(772) 871-5157

2025

DATE 10/13/11

RECEIVED FROM Mineola Signs

One hundred fifty and 00/100 $ 150 00 DOLLARS

FOR Variance (Save-a-lot)

AMOUNT OF ACCOUNT		
THIS PAYMENT		
BALANCE DUE		

☐ CASH
☒ CHECK
☐ M.O.

BY [signature]

THANK YOU

20955

GREAT NECK SIGNS DBA
MINEOLA SIGNS
255 MINEOLA BLVD
MINEOLA NY 11501-2407

1-32/210 NY
94022

DATE 10/12/11

PAY TO THE ORDER OF City of Port Saint Lucie $ 150.00

One hundred and fifty even DOLLARS

Security Features Details on Back.

Bank of America

ACH R/T 021000322

FOR Appeal - Sav-A-Lot

MP

⑈020955⑈ ⑆021000322⑆ 009419200969⑈

SENDER: *COMPLETE THIS SECTION*

- Complete items 1, 2, and 3. Also complete item 4 if Restricted Delivery is desired.
- Print your name and address on the reverse so that we can return the card to you.
- Attach this card to the back of the mailpiece, or on the front if space permits.

1. Article Addressed to:

Mineola Signs
1808 SW Biltmore Street
Port St. Lucie, FL 34984

Attn: Barbara Rezende

COMPLETE THIS SECTION ON DELIVERY

A. Signature
X
☐ Agent
☐ Addressee

B. Received by *(Printed Name)*

C. Date of Delivery

D. Is delivery address different from item 1? ☐ Yes
If YES, enter delivery address below: ☐ No

3. Service Type
☐ Certified Mail ☐ Express Mail
☐ Registered ☐ Return Receipt for Merchandise
☐ Insured Mail ☐ C.O.D.

4. Restricted Delivery? *(Extra Fee)* ☐ Yes

2. Article Number
(Transfer from service label) 7011 0470 0000 2759 6777

PS Form 3811, February 2004 Domestic Return Receipt 102595-02-M-1540

7011 0470 0000 2759 6777

U.S. Postal Service™
CERTIFIED MAIL™ RECEIPT
(Domestic Mail Only; No Insurance Coverage Provided)

For delivery information visit our website at www.usps.com®

OFFICIAL USE

Postage	$
Certified Fee	
Return Receipt Fee (Endorsement Required)	
Restricted Delivery Fee (Endorsement Required)	
Total Postage & Fees	$

Postmark Here

Sent To Mineola Signs
Street, Apt. No.; or PO Box No. 1808 SW Biltmore St.
City, State, ZIP+4 Port St. Lucie, FL 34984

PS Form 3800, August 2006 See Reverse for Instructions

U.S. Postal Service™
CERTIFIED MAIL™ RECEIPT
(Domestic Mail Only; No Insurance Coverage Provided)
For delivery information visit our website at www.usps.com®
OFFICIAL USE
Postage $
Certified Fee
Return Receipt Fee (Endorsement Required)
Restricted Delivery Fee (Endorsement Required)
Total Postage & Fees $
Postmark Here
Sent To Mineola Signs
Street, Apt. No.; or PO Box No. 1808 SW Biltmore St.
City, State, ZIP+4 Port St. Lucie, FL 34984
PS Form 3800, August 2006 See Reverse for Instructions

7011 0470 0000 2759 6777

7011 0470 0000 2759 6777

PLACE STICKER AT TOP OF ENVELOPE TO THE RIGHT OF THE RETURN ADDRESS. FOLD AT DOTTED LINE

CERTIFIED MAIL™

Foreign Account Number : 11515278

Ad # : 2327394

Ad Net Cost : $79.59

Name (Primary) : CITY OF PORT ST. LUCIE

Company (Primary) : CITY OF PORT ST. LUCIE

Street 1 (Primary) : 121 SW PORT ST. LUCIE BLVD

City (Primary) : PORT ST LUCIE

State (Primary) : FL

ZIP (Primary) : 34984

Phone (Primary) : (772) 344-4390

Class Code : 9424SC - Notice of Meeting

Start Date : 10/21/2011

Stop Date : 10/21/2011

Prepayment Amount : $0.00

Ad Sales Rep. : 190 - Barbara Wentzel

Width : 1

Depth : 108

NOTICE OF
PUBLIC HEARING

The City Council of the City of Port St. Lucie serving as the Board of Zoning Appeals will consider an appeal on November 21, 2011, at 1:30 p.m., at Port St. Lucie City Hall, 121 S.W. Port St. Lucie Boulevard, Port St. Lucie, Florida as follows:

Zoning Appeal
#11-4

Legal Description:
Town Center Shopping Center, Parcel D, Port St. Lucie Unit 4

Location:
10105 US Highway 1, Port St. Lucie, FL

Action Sought:
Appeal the decision of the Planning & Zoning Board of October 4, 2011, to deny granting a variance request for signage with greater than the permitted maximum square footage and maximum letter height, Chapter 155, City of Port St. Lucie Sign Code, Save-A-Lot Food Store, P10-113

Appellant:
Owner: EXT Owner, LLC, Travis M. Molis, Manager of Corporate Real Estate

Copies of the above appeal documents are available in the City Clerk's office for

public inspection Monday through Friday between the hours of 8:00 a.m. and 4:30 p.m. Interested parties may appear at the meeting and be heard with respect to the appeal.

No stenographic record by a certified court reporter will be made of the foregoing meeting. Accordingly, any person who may seek to appeal any decision involving the matters noticed herein will be responsible for making a verbatim record of the testimony and evidence at said meeting upon which any appeal is to be based.

Karen A. Phillips, CMC
City Clerk

Publish: October 21, 2011
2327394

SCRIPPS TREASURE COAST NEWSPAPERS

St. Lucie News-Tribune

600 Edwards Road, Ft Pierce, FL 34982

SCRIPPS

AFFIDAVIT OF PUBLICATION

STATE OF FLORIDA
COUNTY OF ST. LUCIE

Before the undersigned authority personally appeared, Tereliz Cloud, who on oath says that she is Classified Inside Sales Supervisor of the St. Lucie News-Tribune, a daily newspaper published at Fort Pierce in St. Lucie County, Florida: that the attached copy of advertisement was publshed in the St. Lucie News-Tribune in the following issues below. Affiant further says that the said St Lucie News-Tribune is a newspaper published in Fort Pierce, in said St. Lucie County, Florida, and that said newspaper has heretofore been continuously published in said St. Lucie County, Florida, daily and distributed in St. Lucie County, Florida, for a period of one year next preceding the first publication of the attached copy of advertisement; and affiant further says that she has neither paid or promised any person, firm or corporation any discount, rebate, commission or refund for the purpose of securing this advertisement for publication in the said newspaper. The St. Lucie News-Tribune has been entered as Periodical Matter at the Post Offices in Fort Pierce, St. Lucie County, Florida and has been for a period of one year next preceding the first publication of the attached copy of advertisement.

Customer	Ad Number	Pub Date	Copyline	PO #
CITY OF PORT ST. LUCIE	2327394	10/21/2011	NOTICE OF PUBLIC HEARING	NOV 21, 2011

Rec'd 10/24/11

NEWSPAPER E-Sheet®
LEGAL NOTICE
ATTACHED
****
DO NOT
SEPARATE PAGES

Sworn to and subscribed before me this day of, October 21, 2011, by

Tereliz Cloud, who is
Tereliz Cloud

[X] personally known to me or

[ ] who has produced _____ as identification.

Michael Merone
Michael Merone Notary Public

ORIGINAL

SEAL

MICHAEL MERONE
Notary Public - State of Florida
My Comm. Expires May 20, 2014
Commission # DD 994177

/ PO# NOV 21, 2011
CITY OF PORT ST LUCIE
Zone: Local/B10/St Lucie News Tribune
NOTICE OF PUBLIC HEA

Ad Number: 2327394 Client Name:
Insertion Number: Advertiser:
Size: 1 x 108 Section/Page/Zone:
Color Type: B&W Description:

Scripps Treasure Coast Newspapers
News/Press-Tribune • Jupiter Courier • Sebastian Sun
Publication Date: 10/21/2011
This E-Sheet(R) is provided as conclusive evidence that the ad appeared in Treasure Coast News/Press-Tribune on the date and page indicated. You may not create derivative works, or in any way exploit or repurpose any content.

NOTICE OF SALE

RECORDED IN PLAT BOOK 13, PAGE 5, 5A TO 5F OF THE PUBLIC RECORDS OF ST LUCIE COUNTY, FLORIDA

and commonly known as: 2958 SW ORTEGA STREET, PORT SAINT LUCIE, FL 34953; including the building, appurtenances, and fixtures located therein, at public sale, to the highest and best bidder, for cash, Jury Assembly Room, St. Lucie County Courthouse, 218 South 2nd Street, First Floor, Fort Pierce, Florida, on NOVEMBER 3, 2011 at 11 am.

Any persons claiming an interest in the surplus from the sale, if any, other than the property owner as of the date of the lis pendens must file a claim within 60 days after the sale.

Dated this ____day of _____, 20__.

Clark of the Circuit Court
By: Joseph E. Smith
161

Edward B. Pritchard
(813) 229-0900 x1309
Kass, Shuler, PA
PO Box 800
Tampa, FL 33601-0800
286750.081092A NOS

If you are a person with a disability who needs any accommodation in order to participate in this proceeding, you are entitled, at no cost to you, to the provision of certain assistance. Please contact Corrie Johnson, ADA Coordinator, 250 NW Country Club Drive, Suite 217, Port St. Lucie, FL 34986, (772) 807-4370 at least 7 days before your scheduled court appearance, or immediately upon receiving this notification if the time before the scheduled appearance is less than 7 days; if you are hearing or voice impaired, call 711.

Publish: October 14, 21, 2011
2325166

IN THE CIRCUIT COURT OF THE 19TH JUDICIAL CIRCUIT IN AND FOR ST LUCIE COUNTY, FLORIDA
CASE NO: 562009CA007643

NATIONAL CITY BANK SUCCESSOR BY MERGER TO HARBOR FEDERAL SAVINGS BANK,
Plaintiff,
vs.
MARTA BECERRA; UNKNOWN SPOUSE OF MARTA BECERRA IF ANY; ANY AND ALL UNKNOWN PARTIES CLAIMING BY THROUGH, UNDER, AND AGAINST THE HEREIN NAMED INDIVIDUAL DEFENDANT(S) WHO ARE NOT KNOWN TO BE DEAD OR ALIVE, WHETHER SAID UNKNOWN PARTIES MAY CLAIM AN INTEREST AS SPOUSES, HEIRS, DEVISEES, GRANTEES OR OTHER CLAIMANTS,
Defendant(s).

NOTICE OF SALE PURSUANT TO CHAPTER 45

NOTICE IS HEREBY GIVEN pursuant to an Order or Final Judgment of Foreclosure dated July 14, 2011, and entered in case no 562009CA007643 of the Circuit Court of the 19th Judicial Circuit in and for ST LUCIE County, Florida, wherein NATIONAL CITY BANK SUCCESSOR BY MERGER TO HARBOR FEDERAL SAVINGS BANK, is the Plaintiff and MARTA BECERRA and UNKNOWN TENANT(S) are the Defendants, Joseph E. Smith will sell to the highest and best bidder for cash at the Jury Assembly Room 1st Floor, 218 S. 2nd Street, Fort Pierce, FL 34950, St. Lucie County Courthouse, at 11:00 am on the 8th day of November, 2011, the following described property as set forth in said Order of Final Judgment, to wit:

THE NORTH HALF OF THE SOUTHEAST QUARTER OF THE NORTHEAST QUARTER OF THE SOUTHEAST QUARTER OF THE SOUTHWEST QUARTER OF SECTION 7, TOWNSHIP 34 SOUTH, RANGE

NOTICE OF SALE

40 EAST, ST. LUCIE COUNTY, FLORIDA, LESS THE EAST 30 FEET THEREOF.

IF YOU ARE A PERSON CLAIMING A RIGHT TO FUNDS REMAINING AFTER THE SALE, YOU MUST FILE A CLAIM WITH THE CLERK OF COURT NO LATER THAN 60 DAYS AFTER THE SALE. IF YOU FAIL TO FILE A CLAIM, YOU WILL NOT BE ENTITLED TO ANY REMAINING FUNDS. AFTER 60 DAYS, ONLY THE OWNER OF RECORD AS OF THE DATE OF THE LIS PENDENS MAY CLAIM THE SURPLUS.

DATED this 5th day of October, 2011.

By: Amy McGroty
Florida Bar # 829544

Weltman, Weinberg and Reis, Co., L.P.A.
Attorney for Plaintiff(s)
500 W. Cypress Creek Rd, Suite 190
Fort Lauderdale, FL 33309
Telephone (954) 740-5200
Facsimile (954) 740-5290
WWR 10054477

If you are a person with a disability who needs any accommodation in order to participate in this proceeding, you are entitled, at no cost to you, to the provision of certain assistance. Please contact Corrie Johnson, ADA Coordinator, 250 NW Country Club Drive, Suite 217, Port St. Lucie, FL 34986, (772) 807-4370 at least 7 days before your scheduled court appearance, or immediately upon receiving this notification if the time before the scheduled appearance is less than 7 days; if you are hearing or voice impaired, call 711.

Publish: October 21, 28, 2011
2325334

IN THE CIRCUIT COURT OF THE 19th JUDICIAL CIRCUIT OF FLORIDA, IN AND FOR SAINT LUCIE COUNTY
Case #: 2009 CA 008836
Division #:

Fannie Mae ("Federal National Mortgage Association")
Plaintiff
vs.
Brian P. Owens; et al
Defendant(s).

NOTICE OF SALE

NOTICE IS HEREBY GIVEN pursuant to an Order of Final Judgment of Foreclosure dated August 12, 2011, entered in Civil Case No. 2009 CA 008836 of the Circuit Court of the 19th Judicial Circuit in and for Saint Lucie County, Florida, wherein Fannie Mae ("Federal National Mortgage Association"), Plaintiff and Brian P. Owens are defendant(s), the Clerk of Court will sell to the highest and best bidder for cash at Jury Assembly Room of the St. Lucie County Courthouse, 218 South 2nd Street, Ft. Pierce, FL 34950, beginning at 11:00 a.m. on November 10, 2011, the following described property as set forth in said Final Judgment, to-wit:

LOT 22, BLOCK 2848, PORT ST. LUCIE SECTION FORTY, ACCORDING TO THE PLAT THEREOF, RECORDED IN PLAT BOOK 15, PAGE(S) 34, 34A THROUGH 34Y OF THE PUBLIC RECORDS OF ST. LUCIE COUNTY, FLORIDA

ANY PERSON CLAIMING AN INTEREST IN THE SURPLUS FROM THE SALE, IF ANY, OTHER THAN THE PROPERTY OWNER AS OF THE DATE OF THE LIS PENDENS MUST FILE A CLAIM WITHIN 60 DAYS AFTER THE SALE.

Dated this ___ day of _____, 2011.

Luciana Ugarte
FL Bar # 42532

SHAPIRO, FISHMAN & GACHE, LLP
2424 N. Federal Highway, Suite 360
Boca Raton, FL 33431
561-998-6700
561-998-6707
09-155054 FC01 NOS

If you are a person with a disability who needs any accommodation in order to participate in this proceeding, you are entitled, at no cost to you, to the provision of certain assistance. Please contact Corrie Johnson, ADA Coordinator, 250 NW Country Club Drive, Suite 217, Port St. Lucie, FL 34986, (772) 807-4370 at least 7 days before your scheduled court appearance, or immediately upon receiving this notification if the time before the scheduled appearance is less than 7 days; if you are hearing or voice impaired, call 711.

Publish: October 21, 28, 2011
2327325

IN THE CIRCUIT COURT OF THE

NOTICE OF FORECLOSURE

IN THE CIRCUIT COURT OF THE NINETEENTH JUDICIAL CIRCUIT IN AND FOR ST. LUCIE COUNTY, FLORIDA
CIVIL ACTION
CASE NO: 56-2009-CA-006357
DIVISION:

WELLS FARGO BANK, NA,
Plaintiff,
vs.
LARRY C. DOTSON, et al,
Defendant(s).

NOTICE OF FORECLOSURE SALE

NOTICE IS HEREBY GIVEN pursuant to a Final Judgment of Mortgage Foreclosure dated September 23, 2011 and entered in Case No. 56-2009-CA-006357 of the Circuit Court of the NINETEENTH Judicial Circuit in and for ST. LUCIE County, Florida wherein WELLS FARGO BANK, NA is the Plaintiff and LARRY C. DOTSON; CARMEN DUQUE DOTSON; ANY AND ALL UNKNOWN PARTIES CLAIMING BY, THROUGH, UNDER, AND AGAINST THE HEREIN NAMED INDIVIDUAL DEFENDANT(S) WHO ARE NOT KNOWN TO BE DEAD OR ALIVE, WHETHER SAID UNKNOWN PARTIES MAY CLAIM AN INTEREST AS SPOUSE, HEIRS, DEVISEES, GRANTEES, OR OTHER CLAIMANTS: WHIPPOORWILL RUN TOWNHOUSES ASSOCIATION, INC.; PANTHER WOODS MASTER ASSOCIATION, INC.; PANTHER WOODS LOT OWNERS ASSOCIATION, INC.; are the Defendants, The Clerk will sell to the highest and best bidder for cash at JURY ASSEMBLY ROOM, ST. LUCIE COUNTY COURTHOUSE, 218 SOUTH SECOND STREET, FORT PIERCE, FL 34950 at 11:00AM, on 11/01/2011, the following described property as set forth in said Final Judgment:

UNIT NO. 2973 BEING MORE PARTICULARLY DESCRIBED AS FOLLOWS: COMMENCE AT THE SOUTHWEST CORNER OF SECTION 27, TOWNSHIP 34 SOUTH, RANGE 39 EAST, SAINT LUCIE COUNTY, FLORIDA, AS PER PLAT OF MONTE CARLO COUNTRY CLUB UNIT THREE, A SUBDIVISION RECORDED IN PLAT BOOK 23, AT PAGES 27, 27A THROUGH 27C, INCLUSIVE, OF THE PUBLIC RECORDS OF SAINT LUCIE COUNTY, FLORIDA; THENCE NORTH 00 DEGREES 55 MINUTES 02 SECONDS EAST, ALONG THE WEST LINE OF SAID SECTION 27, A DISTANCE OF 624.05 FEET; THENCE NORTH 88 DEGREES 16 MINUTES 19 SECONDS EAST, A DISTANCE OF 37.08 FEET TO THE CORNER OF A BUILDING AND THE POINT OF BEGINNING; THENCE MEANDERING ALONG THE EXTERIOR SURFACE OF THE WALLS OF SAID BUILDING, CONTINUE NORTH 88 DEGREES 16 MINUTES 19 SECONDS EAST, A DISTANCE OF 30.40 FEET; THENCE NORTH 01 DEGREES 43 MINUTES 41 SECONDS WEST A DISTANCE OF 6.00 FEET; THENCE NORTH 88 DEGREES 16 MINUTES 19 SECONDS EAST, A DISTANCE OF 8.20 FEET; THENCE NORTH 01 DEGREES 43 MINUTES 41 SECONDS WEST A DISTANCE OF 4.00 FEET; THENCE NORTH 88 DEGREES 16 MINUTES 19 SECONDS EAST A DISTANCE OF 14.70 FEET; THENCE SOUTH 01 DEGREES 43 MINUTES 41 SECONDS EAST A DISTANCE OF 38.33 FEET TO THE CENTERLINE OF THE COMMON PARTY WALL DIVIDING UNITS 2973 AND 2971; THENCE SOUTH 88 DEGREES 16 MINUTES 19 SECONDS WEST ALONG THE CENTERLINE OF SAID COMMON PARTY WALL, A DISTANCE OF 53.30 FEET, TO THE EXTERIOR SURFACE OF THE BUILDING WALL; THENCE NORTH 01 DEGREES 43 MINUTES 41 SECONDS WEST ALONG THE EXTERIOR SURFACE OF THE BUILDING WALL, A DISTANCE OF 28.33 FEET TO THE POINT OF BEGINNING.
TOGETHER WITH THE FOLLOWING: COMMENCE AT THE SOUTHWEST CORNER OF SECTION 27, TOWNSHIP 34 SOUTH, RANGE 39 EAST, SAINT LUCIE COUNTY, FLORIDA, AS PER PLAT OF MONTE CARLO COUNTRY CLUB UNIT THREE, A SUBDIVISION RECORDED IN PLAT BOOK 23, AT PAGES 27, 27A THROUGH 27C, INCLUSIVE, OF THE PUBLIC RECORDS OF SAINT LUCIE COUNTY, FLORIDA, THENCE NORTH 00 DEGREES 55 MINUTES 02 SECONDS EAST ALONG THE WEST LINE OF SAID SECTION 27, A DISTANCE OF 653.25 FEET; THENCE NORTH 88 DEGREES 16 MINUTES 19 SECONDS EAST A DISTANCE OF 64.10 FEET, TO THE CORNER OF THE GARAGE BUILDING AND THE POINT OF BEGINNING; THENCE MEANDERING ALONG THE EXTERIOR SURFACE OF THE WALL OF SAID GARAGE BUILDING, CONTINUE NORTH 88 DEGREES 16 MINUTES 19 SECONDS EAST A DISTANCE OF 28.00 FEET; THENCE SOUTH 01 DEGREES 43 MINUTES 41 SECONDS EAST A DISTANCE OF 13.00 FEET; THENCE SOUTH 88 DEGREES 16 MINUTES 19 SECONDS WEST A DISTANCE OF 28.00 FEET; THENCE NORTH 01 DEGREES 43 MINUTES 41 SECONDS WEST A DISTANCE OF 13.00 FEET TO THE POINT OF BEGINNING.

A/K/A 2973 BENT PINE DRIVE, FORT PIERCE, FL 34951

Any person claiming an interest in the surplus from the sale, if any, other than the property owner as of the date of the Lis Pendens must file a claim within sixty (60) days after the sale.

By: Scott R. Lin
Florida Bar No. 11277

If you are a person with a disability who needs any accommodation in order to participate in this proceeding, you are entitled, at no cost to you, to the provision of certain assistance. Please contact Corrie Johnson, ADA Coordinator, 250 NW Country Club Drive, Suite 217, Port St. Lucie, FL 34986, (772) 807-4370 at least 7 days before your scheduled court appearance, or immediately upon receiving this notification if the time before the scheduled appearance is less than 7 days; if you are hearing or voice impaired, call 711.

ATTORNEY FOR PLAINTIFF
Florida Default Law Group, P.L.
P.O. Box 25018
Tampa, Florida 33622-5018
F09078971

Publish: October 14, 21, 2011
2324444

NOTICE OF SALE

19th JUDICIAL CIRCUIT OF FLORIDA, IN AND FOR SAINT LUCIE COUNTY
Case #: 2010 CA 000072
Division #:

American Home Mortgage Servicing, Inc.
Plaintiff
vs.
Alana Cohen and Kyle G. Cohen, Wife and Husband; et al
Defendant(s).

NOTICE OF SALE

NOTICE IS HEREBY GIVEN pursuant to an Order rescheduling foreclosure sale dated September 30, 2011, entered in Civil Case No. 2010 CA 000072 of the Circuit Court of the 19th Judicial Circuit in and for Saint Lucie County, Florida, wherein American

NOTICE OF FORECLOSURE

with a disability who needs any accommodation in order to participate in this proceeding, you are entitled, at no cost to you, to the provision of certain assistance. Please contact Corrie Johnson, ADA Coordinator, 250 NW Country Club Drive, Suite 217, Port St. Lucie, FL 34986, (772) 807-4370 at least 7 days before your scheduled court appearance, or immediately upon receiving this notification if the time before the scheduled appearance is less than 7 days; if you are hearing or voice impaired, call 711.

Publish: October 21, 28, 2011
2327325

IN THE CIRCUIT COURT OF THE 19th JUDICIAL CIRCUIT OF FLORIDA, IN AND FOR SAINT LUCIE COUNTY
Case #: 2009 CA 008836
Division #:

Fannie Mae ("Federal National Mortgage Association")
Plaintiff
vs.
Brian P. Owens; et al
Defendant(s).

NOTICE OF SALE

NOTICE IS HEREBY GIVEN pursuant to an Order of Final Judgment of Foreclosure dated August 12, 2011, entered in Civil Case No. 2009 CA 008836 of the Circuit Court of the 19th Judicial Circuit in and for Saint Lucie County, Florida, wherein Fannie Mae ("Federal National Mortgage Association"), Plaintiff and Brian P. Owens are defendant(s), the Clerk of Court will sell to the highest and best bidder for cash at Jury Assembly Room of the St. Lucie County Courthouse, 218 South 2nd Street, Ft. Pierce, FL 34950, beginning at 11:00 a.m. on November 10, 2011, the following described property as set forth in said Final Judgment, to-wit:

LOT 22, BLOCK 2848, PORT ST. LUCIE SECTION FORTY, ACCORDING TO THE PLAT THEREOF, RECORDED IN PLAT BOOK 15, PAGE(S) 34, 34A THROUGH 34Y OF THE PUBLIC RECORDS OF ST. LUCIE COUNTY, FLORIDA

ANY PERSON CLAIMING AN INTEREST IN THE SURPLUS FROM THE SALE, IF ANY, OTHER THAN THE PROPERTY OWNER AS OF THE DATE OF THE LIS PENDENS MUST FILE A CLAIM WITHIN 60 DAYS AFTER THE SALE.

Dated this ___ day of _____, 2011.

Luciana Ugarte
FL Bar # 42532

SHAPIRO, FISHMAN & GACHE, LLP
2424 N. Federal Highway, Suite 360
Boca Raton, FL 33431
561-998-6700
561-998-6707
09-155054 FC01 NOS

If you are a person

NOTICE OF SALE

Home Mortgage Servicing, Inc., Plaintiff and Alana Cohen and Kyle G. Cohen, Wife and Husband are defendant(s), the Clerk of Court will sell to the highest and best bidder for cash at Jury Assembly Room of the St. Lucie County Courthouse, 218 South 2nd Street, Ft. Pierce, FL 34950, beginning at 11:00 a.m. on November 10, 2011, the following described property as set forth in said Final Judgment, to-wit:

LOT 61, BLOCK A, VIZCAYA FALLS PLAT 1, ACCORDING TO THE MAP OR PLAT THEREOF, AS RECORDED IN PLAT BOOK 46, PAGE 32, OF THE PUBLIC RECORDS OF SAINT LUCIE COUNTY, FLORIDA.

ANY PERSON CLAIMING AN INTEREST IN THE SURPLUS FROM THE SALE, IF ANY, OTHER THAN THE PROPERTY OWNER AS OF THE DATE OF THE LIS PENDENS MUST FILE A CLAIM WITHIN 60 DAYS AFTER THE SALE.

Dated this ___ day of _____, 2011.

Luciana Ugarte
FL Bar # 42532

SHAPIRO, FISHMAN & GACHE, LLP
2424 N. Federal Highway, Suite 360
Boca Raton, FL 33431
561-998-6700
561-998-6707
09-164349 FC01 NOS

If you are a person with a disability who needs any accommodation in order to participate in this proceeding, you are entitled, at no cost to you, to the provision of certain assistance. Please contact Corrie Johnson, ADA Coordinator, 250 NW Country Club Drive, Suite 217, Port St. Lucie, FL 34986, (772) 807-4370 at least 7 days before your scheduled court appearance, or immediately upon receiving this notification if the time before the scheduled appearance is less than 7 days; if you are hearing or voice impaired, call 711.

Publish: October 21, 28, 2011
2327331

IN THE CIRCUIT COURT OF THE NINETEENTH JUDICIAL CIRCUIT IN AND FOR ST. LUCIE COUNTY, FLORIDA,
CIVIL ACTION
CASE NO.: 562011CA000297

AURORA LOAN SERVICES, LLC,
Plaintiff,
vs.
SHEILA V BOTANA, et al.
Defendant(s)

NOTICE OF SALE

Notice is hereby given that, pursuant to an Order of Final Judgment of Foreclosure dated October 7, 2011, entered in Civil Case Number 562011CA000297, in the Circuit Court for St. Lucie County, Florida, wherein AURORA LOAN SERVICES, LLC is the Plaintiff, and SHEILA V BOTANA, et al., are the Defendants, St. Lucie County Clerk of Court will sell the property situated in St. Lucie County, Florida, described as:

LOTS 4 AND 5, BLOCK 157 OF PORT ST LUCIE SECTION FOUR, ACCORDING TO THE PLAT THEREOF AS RECORDED IN PLAT BOOK 12, PAGE(S) 14A TO 14G, OF THE PUBLIC RECORDS OF ST LUCIE COUNTY, FLORIDA

at public sale, to the highest and best bidder, for cash, at St. Lucie County Courthouse, 218 South 2nd Street, Fort Pierce, FL 34954 at 11:00 AM, on the 15th day of November, 2011. Any person claiming an interest in the surplus from the sale, if any, other than the property owner as of the date of the lis pendens must file a claim within 60 days after the sale.

Dated: 10/10/2011

By:
Hayley C. Jones,
Esquire
(FBN 64902)

FLORIDA FORECLOSURE

NOTICE OF SALE

ATTORNEYS, PLLC
601 Cleveland Street, Suite 690
Clearwater, FL 33755
(727) 446-4826
CA11-03150 NOS

If you are a person with a disability who needs any accommodation in order to participate in this proceeding, you are entitled, at no cost to you, to the provision of certain assistance. Please contact Corrie Johnson, ADA Coordinator, 250 NW Country Club Drive, Suite 217, Port St. Lucie, FL 34986, (772) 807-4370 at least 7 days before your scheduled court appearance, or immediately upon receiving this notification if the time before the scheduled appearance is less than 7 days; if you are hearing or voice impaired, call 711.

Publish: October 21, 28, 2011
2327416

NOTICE OF SALE

NOTICE IS HEREBY GIVEN that the undersigned intends to sell the personal property described below to enforce a lien imposed on said property under The Florida Self Storage Facility Act Statutes (Section 83.801-83.809). The undersigned will sell at public sale by competitive bidding on Tuesday, November 15th, 2011, at 3:00 P.M. on the premises where said property has been stored and which are located at AMERICAN PERSONAL STORAGE, 1849 SW South Macedo Blvd, City of Port St. Lucie, County of St. Lucie, State of Florida, the following:

Name: Unit #: Contents:
C M B Electrical - 52 - Electrical equipment, supplies.
Arthur Ball - 63 - HHG
James Crabtree - 409 - HHG - Boxes
Micayla M. Hoehn - 617 - HHG
Mark Gaudette - 630 - HHG
Gina Marie Manfre - 662 - HHG
Lois Stukel - 901 - HHG

Purchases must be paid for at the time of purchase by cash or credit card only. All purchased items are sold as is, where is, and must be removed at the time of the sale. Sale is subject to cancellation in the event of settlement between owner and obligated party.
Dated this October 17, 2011.
Jerry Mahaffey, Auctioneer- AB 2314 AU 1139 - 10% BP.

Publish: October 21, 28, 2011
2327487

IN THE CIRCUIT COURT FOR ST. LUCIE COUNTY, FLORIDA
CIVIL DIVISION
CASE NO.: 562008CA004495 XXXXXX

BANK OF NEW YORK AS TRUSTEE FOR THE CERTIFICATEHOLDERS OF CWABS 2005-06
Plaintiff,
vs.
JOHN E. PASMORE; et al
Defendants.

RE-NOTICE OF SALE PURSUANT TO CHAPTER 45

NOTICE IS HEREBY GIVEN pursuant to an Order or Summary Final Judgment of Foreclosure Sale dated September 23, 2009, and an Order Resetting Sale dated September 14, 2011, and entered in Case No. 562008CA004495 XXXXXX of the Circuit Court of the 19th Judicial Circuit in and for Saint Lucie County, Florida, wherein BANK OF NEW YORK AS TRUSTEE FOR THE CERTIFICATEHOLDERS OF CWABS 2005-06 is Plaintiff and JOHN PASMORE; SAUNDRA LYNN PASMORE; UNKNOWN TENANT NO.1; UNKNOWN TENANT NO.2; and ALL UNKNOWN PARTIES CLAIMING INTERESTS BY, THROUGH, UNDER OR AGAINST A NAMED DEFENDANT TO THIS ACTION, OR HAVING OR CLAIMING TO HAVE ANY RIGHT, TITLE OR INTEREST IN THE PROPERTY HEREIN DESCRIBED, are Defendants. JOSEPH E. SMITH, Clerk of the Circuit Court, will

NOTICE OF SALE

sell to the highest and best bidder for cash, in the Jury Assembly Room of the St. Lucie County Courthouse, 218 South Second Street, Ft. Pierce, Florida 34950, at 11:00 a.m. on the 3rd day of November, 2011, the following described property as set forth in said Final Judgment, to-wit:

LOT 23, BLOCK 445, PORT ST. LUCIE SECTION THREE, ACCORDING TO THE MAP OR PLAT THEREOF, AS RECORDED IN PLAT BOOK 12, PAGES 13, 13A THROUGH 13H, PUBLIC RECORDS OF ST LUCIE COUNTY, FLORIDA.

ANY PERSON CLAIMING AN INTEREST IN THE SURPLUS FROM THE SALE, IF ANY, OTHER THAN THE PROPERTY OWNER AS OF THE DATE OF THE LIS PENDENS MUST FILE A CLAIM WITHIN 60 DAYS AFTER THE SALE.

If you are a person with a disability who needs any accommodation in order to participate in this proceeding, you are entitled, at no cost to you, to the provision of certain assistance. Please contact Corrie Johnson, ADA Coordinator, 250 NW Country Club Drive, Suite 217, Port St. Lucie, FL 34986, (772) 807-4370 at least 7 days before your scheduled court appearance, or immediately upon receiving this notification if the time before the scheduled appearance is less than 7 days; if you are hearing or voice impaired, call 711.

DATED at Fort Pierce, Florida on September 23, 2011.

By: Rick A. Garcia
Florida Bar No. 0078187

Attorneys for Plaintiff:
SMITH, HIATT & DIAZ, P. A.
PO Box 11438
Ft. Lauderdale FL 33339
(954) 564-0071
1183-49849 NOS

Publish: October 14, 21, 2011
2324988

IN THE CIRCUIT COURT OF THE NINETEENTH JUDICIAL CIRCUIT IN AND FOR ST. LUCIE COUNTY, FLORIDA
CIVIL ACTION
CASE NO.: 562009CA000535 XXXHC
DIVISION: GENERAL

GMAC MORTGAGE LLC,
Plaintiff,
vs.
JEFFREY WRIGHT A/K/A JEFFREY L WRIGHT, et al,
Defendant(s).

NOTICE OF RESCHEDULED FORECLOSURE SALE

NOTICE IS HEREBY GIVEN that the Clerk of St. Lucie County Court, will on the 8th day of November, 2011, at 11:00 am, at the SAINT LUCIE Courthouse, located at 218 South 2nd Street, Ft. Pierce, Florida, 34950, offer for sale and sell at public outcry to the highest and best bidder for cash, the following described property situate in SAINT LUCIE, Florida,

CONDOMINIUM UNIT A, BUILDING 27, CAMELOT GARDENS CONDOMINIUM, PHASE 12, A CONDOMINIUM ACCORDING TO THE DECLARATION THEREOF RECORDED IN OFFICIAL RECORD BOOK 374, PAGE 923, PUBLIC RECORDS OF ST LUCIE COUNTY, FLORIDA, TOGETHER WITH ALL AMENDMENTS THERETO.

pursuant to a Final Judgment of Foreclosure entered In Case No. 562009CA000535XXXHC of the Circuit Court of the NINETEENTH Judicial Circuit in and for SAINT LUCIE County, Florida, the style of which is indicated above.

Any person claiming an interest in the sur- [illegible] pendens must file a claim within 60 days

after the sale

WITNESS MY HAND this 22nd day of September, 2011.

By: Jennifer L. Howell
FLORIDA BAR NO.: 0383340
Joseph Wolenski
FLORIDA BAR NO.: 42948

JOHNSON & FREEDMAN, LLC
400 Northridge Road, Suite 1100, M/S 27
Sandy Springs, Georgia 30350
770-234-9181

If you are a person with a disability who needs any accommodation in order to participate in this proceeding, you are entitled, at no cost to you, to the provision of certain assistance. Please contact Corrie Johnson, ADA Coordinator, 250 NW Country Club Drive, Suite 217, Port St. Lucie, FL 34986, (772) 807-4370 at least 7 days before your scheduled court appearance, or immediately upon receiving this notification if the time before the scheduled appearance is less than 7 days; if you are hearing or voice impaired, call 711.

Publish: October 21, 28, 2011
2325342

IN THE CIRCUIT COURT OF THE NINETEENTH JUDICIAL CIRCUIT IN AND FOR ST. LUCIE COUNTY, FLORIDA
CIVIL ACTION
CASE NO.: 56-2008-CA-010003
DIVISION: GENERAL

AURORA LOAN SERVICES, LLC
Plaintiff,
vs.
FRED JOSEPH, ET AL
Defendant(s).

NOTICE OF RESCHEDULED FORECLOSURE SALE

NOTICE IS HEREBY GIVEN that the undersigned Clerk of St. Lucie County Court will, on the 8th day of November, 2011, at 11:00 am, at the SAINT LUCIE Courthouse, located in the Jury Assembly Room at 218 South 2nd Street, Ft. Pierce, Florida, 34950, offer for sale and sell at public outcry to the highest and best bidder for cash, the following described property situate in SAINT LUCIE, Florida,

THE NORTH 45 FEET OF LOT 12 AND THE SOUTH 30 FEET OF LOT 11, BLOCK 3, MELISSA MEADOWS, A SUBDIVISION, ACCORDING TO THE PLAT THEREOF AS RECORDED IN PLAT BOOK 9, PAGE 72, OF THE PUBLIC RECORDS OF ST. LUCIE COUNTY, FLORIDA.

AKA 2005 NORTH 42ND STREET, FORT PIERCE, FL 34947

pursuant to a Final Judgment of Foreclosure entered in Case No. 56-2008-CA-010003 of the Circuit Court of the NINETEENTH Judicial Circuit in and for SAINT LUCIE County, Florida, the style of which is indicated above.

Any person claiming an interest in the surplus from the sale, if any, other than the property owner as of the date of the lis pendens must file a claim within 60 days after the sale

WITNESS MY HAND this 27th day of September, 2011.

By: Joseph Wolenski
FLORIDA BAR NO.: 0042948

JOHNSON & FREEDMAN, LLC
400 Northridge Road, Suite 1100, M/S 27
Sandy Springs, Georgia 30350
770-234-9181

If you are a person with a disability who needs any accommodation in order to participate in this proceeding, you are entitled, at no cost to you, to the provision of certain assistance. Please contact Corrie Johnson, ADA Coordinator, 250 NW [illegible] Club Drive, [illegible] Port St. [illegible] at [illegible] days before [illegible] scheduled court appearance, or im-

NOTICE OF SALE

mediately upon receiving this notification if the time before the scheduled appearance is less than 7 days; if you are hearing or voice impaired, call 711.

Publish: October 21, 28, 2011
2325374

NOTICE OF MEETING

NOTICE OF LANDOWNERS AND BOARD OF SUPERVISORS MEETING PORTOFINO LANDINGS COMMUNITY DEVELOPMENT DISTRICT

Notice is hereby given to all landowners within Portofino Landings Community Development District (the "District") which contains approximately 34.27 acres and is generally located along the north side of Okeechobee Road (S.R. 70) and on the east and west sides of the McNeil Road Extension, advising that a meeting of landowners' will be held for the purpose of electing three Supervisors.

Date:
November 08, 2011
Time:
10:30 AM
Place:
2160 NW Reserve Park Trace,
Port St. Lucie FL
34986-3223

Each landowner may vote in person or by written proxy. Proxy forms may be obtained upon request at the office of the District Manager, Governmental Management Services, LLC, 5701 N. Pine Island Road, Suite 370, Ft. Lauderdale FL 33321. At said meeting each landowner or his proxy shall be entitled to cast one vote per acre of land owned by him and located within the District for each person to be elected. A fraction of an acre shall be treated as one acre.

Immediately following the landowners meeting there will be convened a regular meeting of the Board of Supervisors for the purpose of considering certain organizational matters of the Board to include election of certain District officers, and other such business which may properly come before the Board.

The meeting is open to the public and will be conducted in accordance with the provisions of Florida Law for Community Development Districts. A copy of the agenda for this meeting may be obtained from Governmental Management Services, LLC, 5701 N. Pine Island Road, Suite 370 Ft. Lauderdale FL 33321. There may be an occasion where one or more supervisors will participate by telephone. At the above location there will be present a speaker telephone so that any interested person can attend the meeting at the above location and be fully informed of the discussions taking place either in person or by telephone communication. Pursuant to provisions of the Americans with Disabilities Act, any person requiring special accommodations to participate in this hearing is asked to contact the District Office at (954) 721-8681, at least 48 hours before the hearing.

A person who decides to appeal any decision made by the Board with respect to any matter considered at the meeting is advised that person will need a record of the proceedings and that accordingly, the person may need to ensure that a verbatim record of the proceedings is made, including the testimony and evidence upon which the appeal is to be based.

Rich Hans
Manager

Publish: October 14, 21, 2011
2318031

NOTICE OF PUBLIC HEARING

The City Council of

NOTICE OF MEETING

the City of Port St. Lucie serving as the Board of Zoning Appeals will consider an appeal on November 21, 2011, at 1:30 p.m., at Port St. Lucie City Hall, 121 S.W. Port St. Lucie Boulevard, Port St. Lucie, Florida as follows:

Zoning Appeal
#11-4

Legal Description:
Town Center Shopping Center, Parcel D, Port St. Lucie Unit 4

Location:
10105 US Highway 1, Port St. Lucie, FL

Action Sought:
Appeal the decision of the Planning & Zoning Board of October 4, 2011, to deny granting a variance request for signage with greater than the permitted maximum square footage and maximum letter height, Chapter 155, City of Port St. Lucie Sign Code, Save-A-Lot Food Store, P10-113

Appellant:
Owner: EXT Owner, LLC, Travis M. Molis, Manager of Corporate Real Estate

Copies of the above appeal documents are available in the City Clerk's office for public inspection Monday through Friday between the hours of 8:00 a.m. and 4:30 p.m. Interested parties may appear at the meeting and be heard with respect to the appeal.

No stenographic record by a certified court reporter will be made of the foregoing meeting. Accordingly, any person who may seek to appeal any decision involving the matters noticed herein will be responsible for making a verbatim record of the testimony and evidence at said meeting upon which any appeal is to be based.

Karen A. Phillips, CMC
City Clerk

Publish: October 21, 2011
2327394

PUBLIC NOTICE

NOTICE IS HEREBY GIVEN THAT THE FOLLOWING COMMITTEES OF THE DISTRICT BOARD OF TRUSTEES OF INDIAN RIVER STATE COLLEGE WILL MEET TUESDAY, OCTOBER 25, 2011 IN ROOM 110, THE CENTER FOR ACADEMIC INNOVATION, IN THE CLARK ADVANCED LEARNING CENTER ON THE INDIAN RIVER STATE COLLEGE CHASTAIN CAMPUS AT 2400 S.E. SALERNO ROAD, STUART, FLORIDA 34997.

FINANCE & AUDIT COMMITTEE - 1:20 P.M.
CLARK ADVANCED LEARNING CENTER COMMITTEE - 2:00 P.M.
CURRICULUM COMMITTEE - 2:20 P.M.
PHYSICAL PLANT COMMITTEE - 2:40 P.M.

ANY PERSONS SEEKING TO APPEAL THE DECISIONS OF THE BOARD WITH RESPECT TO ANY MATTER CONSIDERED AT SUCH MEETING WILL NEED A RECORD OF THE PROCEEDINGS, AND FOR SUCH PURPOSE MAY NEED TO ENSURE THAT A VERBATIM RECORD OF THE PROCEEDING IS MADE.

Publish: Oct. 21, 2011
2327311

+A P11-115

dd's

dd's
DISCOUNTS®
dd's DISCOUNTS
10101
DISCOUNT DAY

BEALLS

OPEN ENTER

STAPLES
The Office Superstore

dd's
DISCOUNTS
Coming Soon
OPEN
7 DAYS