COUNCIL ITEM 13A
DATE 6/25/12

PORT ST. LUCIE CITY COUNCIL
AGENDA ITEM REQUEST

Meeting Date: June ~~11~~ 25, 2012

Public Hearing ____ Ordinance ____ Resolution ____ Motion X

Item: Contract #20120009 – Suppliers for Water & Sewer Products

Recommended Action: Approval to enter into a thirty six (36) month Fixed Unit Price Contract with HD Waterworks and Ferguson Waterworks with two (2) additional twelve month periods at a mutually agreed upon price with costs documented from the manufacturer. Each line item shall be awarded to the bidder with the lowest unit price with the exception of the pipe items that HD took exception to in their bid, which shall be awarded to Ferguson. All items are identified on the attached bid tabulation sheet.

Exhibits: Department memo attached [X] yes [ ] no

Copies of the Bid tabulation Report, Specifications, and the submitted Bid Reply Sheet.

Summary Explanation/Background Information:

The bid was posted to Demandstar on February 17, 2012, and after subsequent addenda (4), opened on April 4, 2012. There were 711 suppliers notified; 33 downloaded specifications and two submitted Bids: HD Waterworks and Ferguson Waterworks. HD Waterworks, the current supplier, was the overall lowest bidder for most line items, but took exception to the terms specified in the bid solicitation by declaring that "*all pipe pricing will be viewed quarterly*". The line items for which HD submitted the lowest bid will be awarded to HD with the exception of the pipe, which will be awarded to Ferguson along with the line items for which Ferguson was the lowest bidder. The contract period will be for thirty-six (36) months with two (2) additional twelve (12) month renewals at mutually agreed upon unit prices.

Purchase (X) was budgeted

Estimated Annual Expenditure: $ 487,942.70

RECEIVED
JUN 04 2012
City Manager's Office

Department requests expenditure from the following:

Fund	431	Utility Fund
Cost Center	000	
Object Code	141005	Inventory
Project	00000	

Director of OMB concurs with award: _____ City Manager concurs with award: _____

Submitted by: ***Jesus Merejo***

Title: Utility Director

Date Submitted: June 5, 2012

INTEROFFICE MEMORANDUM

TO: David K. Pollard, Budget Director

FROM: Jesus A. Merejo, Utility Director

MAY 10 2012

SUBJECT: Suppliers for Water and Wastewater Products
Sealed Bid #20120009

DATE: May 9, 2012

The Utility Systems Department has reviewed the Bid Tabulation and the copies of the bid submittals from HD Waterworks and Ferguson Waterworks.

Utility staff recommends awarding each item to the lowest bidder, excluding the pipe items that HD took exception to by stating "all pipe pricing will be reviewed quarterly". The items that HD took exception to should be awarded to Ferguson Waterworks.

Funding is available in account 431-0000-141005-00000.

Your assistance in forwarding this item for the City Council's consideration will be appreciated.

JT/

Copy: Helen Quintana, Contract Specialist, OMB
Brad Macek, Assistant Utility Director
Jeanette Thompson, Budget Manager
Michael Rossignol, Warehouse Supervisor

SUPPLIERS FOR WATER AND SEWER PRODUCTS
BID TABULATION
E-BID #20120009

	A	B	E	G	H	I	J	K	L
1		**Company Name:**		**HD WATERWORKS**			**FERGUSON WATERWORKS**		
2	Item	Item Description	Mfg. Part No.	Unit Price	Yrly Qty Est	Total	Unit Price	Yrly Qty Est	Total
3		**1. ALL GRINDER COMPENTS/FLOMATIC ONLY**							
4	3328	VALVE BALL CHECK 1-1/4IN PVC - 208T (S04-B19)	208T	$ 3.70	119	$ 440.30	$ 34.70	119	$ 4,129.30
5		**1. SUBTOTAL**				**$ 440.30**	$ -		**$ 4,129.30**
6		**2. BRASS ITEMS / FORD, MUELLER OR APPROVED EQUAL**							
7	10	ADAPTER HYD 2 1/2" x 2" FXM SWIVEL (S06-B33)		$ 59.63	5	$ 298.15	$ 63.88	5	$ 319.40
8	283	VALVE SWING CHECK 1 1/2" BRASS M31 5 PER BX (S06-F08)	M31	$ 16.79	553	$ 9,284.87	$ 28.00	553	$ 15,484.00
9	566	VALVE 1-1/2IN BALL MxFL - BF83-666W BRASS (S06-E39)	BF83-666W	$ 93.22	1	$ 93.22	$ 100.10	1	$ 100.10
10	567	VALVE 2IN BALL MIPxMF LW BRASS - BF83-77W FORD (S06-E41)	BF83-77W	$ 150.82	2	$ 301.64	$ 161.95	2	$ 323.90
11	568	CORP 1-1/2IN STOP MPTxCTS/PJ - BF1100-6 (S06-E40)	BF1100-6	$ 72.92	1	$ 72.92	$ 78.31	1	$ 78.31
12	569	BALL CORP 1-1/2IN MxF - FB1700-6 (S06-D05)	FB1700-6	$ 70.55	1	$ 70.55	$ 75.76	1	$ 75.76
13	570	BALL CORP 2IN MxF BRASS - FB1700-7 *2 PER BX* (S06-E38)	FB1700-7	$ 114.13	8	$ 913.04	$ 122.55	8	$ 980.40
14	578	BACKFLOW 3/4IN VAC BRKR 8B07 - WATTS EDP# 0061992 (S06-E45)	8B07 / 61992	$ 3.63	7	$ 25.41	$ 16.30	7	$ 114.10
15	592	NIPPLE 3/4xCL TBE BRASS - 2012-001 (S06-E26)	2012-001	$ 1.56	112	$ 174.72	$ 1.90	112	$ 212.80
16	593	NIPPLE 1IN X CL BRASS - 2016-001 (S06-E23)	2016-001	$ 2.28	41	$ 93.48	$ 2.80	41	$ 114.80
17	594	NIPPLE 1IN x 3IN BRASS TBE - 2016-300 (S06-E22)	2016-300	$ 3.79	1	$ 3.79	$ 4.60	1	$ 4.60
18	595	NIPPLE 1-1/2IN x CL BRASS - 2024-001 (S06-E17)	2024-001	$ 4.49	11	$ 49.39	$ 5.40	11	$ 59.40
19	596	NIPPLE 1-1/2 x 3IN BRASS - 2024-300 (S06-E18)	2024-300	$ 6.64	8	$ 53.12	$ 8.00	8	$ 64.00
20	597	NIPPLE 2IN X CL BRASS TBE - 2032-001 (S06-E21)	2032-001	$ 6.83	26	$ 177.58	$ 8.20	26	$ 213.20
21	598	NIPPLE 2INx4IN TBE BRASS - 2032-400 (S06-E14)	2032-400	$ 11.14	9	$ 100.26	$ 13.40	9	$ 120.60
22	599	VALVE 3/4IN GATE FPT BRASS - 3407GM300 (S06-F02)	3407GM300	$ 4.75	311	$ 1,477.25	$ 5.80	311	$ 1,803.80
23	600	VALVE 1IN GATE FPT BRASS - 200 WOG *5 PER BX* (S06-C01)	200 WOG	$ 7.69	1	$ 7.69	$ 7.60	1	$ 7.60
24	601	VALVE 1-1/2IN GATE FPT BRASS - #200 WOG FPT *4 PER BX* (S06-C02)	200 WOG	$ 15.26	5	$ 76.30	$ 15.70	5	$ 78.50
25	602	VALVE 2IN GATE FPT BRASS - #200 WOG FPT *2 PER BX* (S06-C03)	200 WOG	$ 23.29	1	$ 23.29	$ 22.80	1	$ 22.80
26	603	VALVE 3/4IN HOSE BIBB BRASS - 3407HBM (S06-C11)	3407HBM	$ 2.84	431	$ 1,224.04	$ 3.76	431	$ 1,620.56
27	604	VALVE 1IN HOSE BIBB BRASS - #107-265/T-531 MALE (S06-C12)	107-265/T-531	$ 8.09	1	$ 8.09	$ 10.00	1	$ 10.00
28	605	VALVE 3/4IN STR DUAL CK BRASS - HHS31-323 FORD *8 PER BX* (S06-D22)	HHS31-323	$ 35.27	2155	$ 76,006.85	$ 36.12	2155	$ 77,838.60
29	606	VALVE 1IN STRAIGHT DUAL CHECK - BRASS FORD#HHS31-344 (S06-D23)	HHS31-344	$ 38.33	21	$ 804.93	$ 39.24	21	$ 824.04
30	607	CORP 1IN STOP BRASS - CTS/PJ X TAPER MPT		$ 33.71	1	$ 33.71	$ 30.43	1	$ 30.43
31	610	VALVE 3/4X5/8IN ANGLE KEY - KV13-332W BRASS *12 PER BX* (S06-D28)	KV13-332W	$ 17.41	45	$ 783.45	$ 18.70	45	$ 841.50
32	611	VALVE 3/4X3/4IN ANGLE KEY - KV43-332WG BRASS *8 PER BX* (S06-D32)	KV43-332WG	$ 22.26	3	$ 66.78	$ 23.90	3	$ 71.70
33	613	VALVE 1IN ANGLE KEY BRASS - KV13-444W *5 PER BX* (S06-D26)	KV13-444W	$ 26.70	32	$ 854.40	$ 28.67	32	$ 917.44
34	614	VALVE 1X1IN ANGLE KEY - BRASS P/N-KV43-444WG *5 PER BX* (S06-D27)	KV43-444WG	$ 30.47	2	$ 60.94	$ 32.72	2	$ 65.44

SUPPLIERS FOR WATER AND SEWER PRODUCTS
BID TABULATION
E-BID #20120009

	A	B	E	G	H	I	J	K	L
1		**Company Name:**		**HD WATERWORKS**			**FERGUSON WATERWORKS**		
2	**Item**	**Item Description**	**Mfg. Part No.**	**Unit Price**	**Yrly Qty Est**	**Total**	**Unit Price**	**Yrly Qty Est**	**Total**
35	**615**	COUPLING 3/4IN COMP/SINGLE - C84-33G MPJxCTS/PJ BR 24 bx (S06-D15)	C84-33G	$ 8.38	7	$ 58.66	$ 9.00	7	$ 63.00
36	**616**	COUPLING 1IN COMP/SINGLE BRASS C84-44G MPTxCTS/PJ 14 PER BX (S06-D17)	C84-44G	$ 9.94	44	$ 437.36	$ 10.67	44	$ 469.48
37	**618**	COUPLING 3/4IN DOUBLE COMP - CTS/PJ #C44-33 BRASS	C44-33G	$ 10.21	1	$ 10.21	$ 10.96	1	$ 10.96
38	**620**	COUPLING 2IN COMP DBL GRIP/JNT - BRASS #C44-77G FORD (S06-D09)	C44-77G	$ 48.24	2	$ 96.48	$ 51.80	2	$ 103.60
39	**623**	SCREW OIL FOR OPERATING NUT STANDARD TRAFFIC 190703 (B02-28)	190703	$ 2.07	2	$ 4.14	$ 20.00	2	$ 40.00
40	**626**	METER COUPLING 3/4IN BRASS - PLUMBERS PIECES (S06-C17)		$ 3.07	75	$ 230.25	$ 5.98	75	$ 448.50
41	**627**	METER COUPLING 1 IN BRASS - PLUMBERS PIECE (S06-C18)		$ 5.39	35	$ 188.65	$ 9.20	35	$ 322.00
42	**629**	TEE 1IN BRASS FPT (S06-C19)		$ 5.64	13	$ 73.32	$ 7.20	13	$ 93.60
43	**630**	ELL 90 2IN ST FxMPT BRASS - 30209E (S06-C23)	30209E	$ 18.84	3	$ 56.52	$ 23.90	3	$ 71.70
44	**631**	REDUCER 1X3/4IN BRASS FXM/THD - MUELLER/METER (S06-E31)		$ 7.94	36	$ 285.84	$ 2.70	36	$ 97.20
45	**633**	REDUCER 1-1/2 X 1IN MPTxFPT - BRASS (S06-E30)		$ 4.55	118	$ 536.90	$ 5.80	118	$ 684.40
46	**634**	REDUCER 2-1/2IN x 2IN MxF - BRASS BUSHING (S06-E33)		$ 13.49	5	$ 67.45	$ 17.10	5	$ 85.50
47	**635**	ADAPTER HYD 2 1/2" X 2" BRASS - MNST (S06-B38)		$ 23.17	25	$ 579.25	$ 18.13	25	$ 453.25
48	**636**	ADAPTER HYD 2 1/2" x 3/4" BRASS - FNST X MIPT (S06-B34)		$ 18.74	3	$ 56.22	$ 11.90	3	$ 35.70
49	**637**	ADAPTER HYD 2 1/2" X 1" BRASS (S06-B35)		$ 18.74	3	$ 56.22	$ 12.50	3	$ 37.50
50	**638**	ADAPTER HYD 2 1/2" x 1 1/2" - BRASS (S06-B36)		$ 13.12	1	$ 13.12	$ 13.20	1	$ 13.20
51	**639**	ADAPTER HYD 2 1/2" X 2" BRASS FXM (S06-B37)		$ 14.20	3	$ 42.60	$ 12.50	3	$ 37.50
52	**644**	HOSE NOZZLE 2 1/2" BRASS AMLOK 84-20-3 (S06-B31)	84-20-3	$ 70.00	1	$ 70.00	$ 88.40	1	$ 88.40
53	**651**	RESETTER COPPER 5/8 x 3/4 x 7 - V42-7W (S06-F03)	V42-7W	$ 51.23	114	$ 5,840.22	$ 52.45	114	$ 5,979.30
54	**652**	RESETTER COPPER 5/8 x 3/4 x 9 - V42-9W FORD (S06-F04)	V42-9W	$ 51.87	23	$ 1,193.01	$ 53.10	23	$ 1,221.30
55	**653**	RESETTER COPPER 5/8 X 3/4 X 12 V42-12W (S06-F06)	V42-12W	$ 53.70	18	$ 966.60	$ 54.98	18	$ 989.64
56	**654**	RESETTER COPPER 1 X 10IN - FORD V44-10W (S07-E13)	V44-10W	$ 97.83	1	$ 97.83	$ 105.05	1	$ 105.05
57	**655**	RESETTER COPPER 1 X 12IN - FORD V44-12W (S07-E14)	V44-12W	$ 100.16	1	$ 100.16	$ 107.55	1	$ 107.55
58	**1198**	NIPPLE 1/4" X 2" BRASS 2271-419 (S06-C38)	2271-419	$ 1.02	3	$ 3.06	$ 1.22	3	$ 3.66
59	**1307**	BALL 2IN CURB STOP FXF BRASS - B11-77W FORD *2 PER BX* (S06-E43)	B11-77W	$ 123.68	4	$ 494.72	$ 132.80	4	$ 531.20
60	**1377**	NIPPLE 1 X 36IN BRASS TBE (S06-E03)		$ 45.05	4	$ 180.20	$ 52.40	4	$ 209.60
61	**1378**	NIPPLE 1 1/2 X 36IN BRASS TBE (S06-E04)		$ 79.05	1	$ 79.05	$ 91.90	1	$ 91.90
62	**1379**	NIPPLE 2IN X 3IN BRASS TBE - 2032-300 (S06-E15)	2032-300	$ 8.51	27	$ 229.77	$ 10.20	27	$ 275.40
63	**1380**	ELL 90 DEG.3/4IN FPTxFPT BRASS - 4501-150 (S06-C27)	4501-150	$ 2.59	1	$ 2.59	$ 3.30	1	$ 3.30
64	**1381**	ELL 90 1IN FPT X FPT - BRASS (S06-C28)		$ 3.99	11	$ 43.89	$ 5.10	11	$ 56.10
65	**1382**	ELL 1-1/2IN 90 FXF - BRASS (S06-C21)		$ 7.92	1	$ 7.92	$ 10.10	1	$ 10.10
66	**1383**	ELL 90 2IN FXF BRASS - 4501-400 (S06-C24)	4501-400	$ 12.89	5	$ 64.45	$ 16.40	5	$ 82.00
67	**1572**	ADAPTER METER 1 X 3/4 IN MXF - BRASS #3907A24 PER PR. (S06-E37)	3907A24	$ 14.20	1	$ 14.20	$ 15.24	1	$ 15.24

SUPPLIERS FOR WATER AND SEWER PRODUCTS
BID TABULATION
E-BID #20120009

	A	B	E	G	H	I	J	K	L
1		**Company Name:**		**HD WATERWORKS**			**FERGUSON WATERWORKS**		
2	**Item**	**Item Description**	**Mfg. Part No.**	**Unit Price**	**Yrly Qty Est**	**Total**	**Unit Price**	**Yrly Qty Est**	**Total**
68	**1573**	REDUCER 2 X 1-1/2IN MxF BRASS - HEX BUSHING (S06-E32)		$ 6.75	8	$ 54.00	$ 8.60	8	$ 68.80
69	**1606**	REDUCER 1 X 3/4IN MPTxFPT - BRASS BUSHING (S06-E28)		$ 2.09	69	$ 144.21	$ 2.70	69	$ 186.30
70	**1640**	COUPLING 5/8 X 3/4IN METER - C31-23 Ford BRASS (S06-E36)	C31-23	$ 7.97	2	$ 15.94	$ 8.56	2	$ 17.12
71	**1655**	REDUCER 1 1/4X1IN MXF/THD - BRASS (S06-E29)		$ 3.57	7	$ 24.99	$ 4.60	7	$ 32.20
72	**1656**	NIPPLE 3/4 X 36IN BRASS TBE - 2012-3600 (S06-E02)	2012-3600	$ 30.05	1	$ 30.05	$ 34.90	1	$ 34.90
73	**1657**	NIPPLE 2 X 36IN BRASS TBE - 2032-3600 (S06-E01)	2032-3600	$ 102.17	3	$ 306.51	$ 118.60	3	$ 355.80
74	**1775**	VALVE 1/2IN BALL FPT BRASS (S06-C04)		$ 3.25	5	$ 16.25	$ 3.70	5	$ 18.50
75	**1776**	VALVE 1IN BALL FPT BRASS - 68-100 (S06-C06)		$ 7.70	34	$ 261.80	$ 8.20	34	$ 278.80
76	**1809**	REDUCER 2 x 3/4IN MxF BRASS - 3020B07020B07 (S06-E34)	3020B07020B07	$ 8.13	8	$ 65.04	$ 10.30	8	$ 82.40
77	**1810**	REDUCER 2x1IN MPTxFPT BRASS - 3020B10 (S06-E35)	3020B10	$ 8.13	15	$ 121.95	$ 10.30	15	$ 154.50
78	**1811**	ELL 90 2IN CTS/PJ X CTS/PJ - L44-77 BRASS (S06-D06)	L44-77	$ 100.70	4	$ 402.80	$ 108.13	4	$ 432.52
79	**1812**	VALVE 2IN ANGLE MTR STOP FxFLG - FORD #BFA13-777W *2 PER BX* (S06-E42)	BFA13-777W	$ 136.25	4	$ 545.00	$ 146.30	4	$ 585.20
80	**1830**	TEE 2IN FPT BRASS (S06-C20)		$ 17.85	7	$ 124.95	$ 22.70	7	$ 158.90
81	**2054**	MARKER BRASS - FOR 2" WATER VALVE (S10-D23)		$ 11.36	1	$ 11.36	$ 15.00	1	$ 15.00
82	**2055**	VALVE 3/4X1IN ANGLE BRASS - KV13-342W *10 PER BX* (S06-D30)	KV13-342W	$ 18.58	36	$ 668.88	$ 19.95	36	$ 718.20
83	**2056**	ADAPTER HYD 2 1/2" X 2" BRASS (S06-B32)		$ 53.83	1	$ 53.83	$ 12.50	1	$ 12.50
84	**2091**	COUPLING 2IN FPT x FPT BRASS - 4540-400 flagg (S06-C16)	4540-400	$ 11.11	13	$ 144.43	$ 14.10	13	$ 183.30
85	**2459**	CROSS 2IN FPT BRASS (S06-C22)		$ 34.05	1	$ 34.05	$ 44.50	1	$ 44.50
86	**2667**	CAP 1-1/4IN THREADED BRASS (S06-C29)		$ 3.97	1	$ 3.97	$ 5.10	1	$ 5.10
87	**2668**	ELL 90 3/4IN STREET FxM BRASS - X103-12 (S06-C25)	X103-12	$ 3.37	2	$ 6.74	$ 4.30	2	$ 8.60
88	**2669**	ELL 90 1IN STREET FPTxMPT BRAS - X103-16 (S06-C26)	X103-16	$ 5.58	9	$ 50.22	$ 7.10	9	$ 63.90
89	**2755**	NUT & 1IN GASKET ASSEMBLY GRIP NUT - BRASS (S06-C34)		$ 3.77	1	$ 3.77	$ 7.30	1	$ 7.30
90	**2756**	NUT & 1IN GASKET ASSEMBLY GRIP NUT GJCN4-4 - BRASS (S06-C35)	GJCN4-4	$ 6.67	51	$ 340.17	$ 7.30	51	$ 372.30
91	**2762**	VALVE 2IN BALL FPT BRASS - 3420BM200 *2 PER BX* (S06-C08)	3420BM200	$ 29.78	15	$ 446.70	$ 27.00	15	$ 405.00
92	**2907**	VALVE 3/4IN BALL FPT BRASS - 3407BM200 (S06-C05)	3407BM200	$ 4.96	131	$ 649.76	$ 5.20	131	$ 681.20
93	**3022**	NIPPLE 3/4 X 3IN BRASS (S06-E27)		$ 2.61	25	$ 65.25	$ 3.20	25	$ 80.00
94	**3112**	UNION 3/4IN FPT BRASS (S06-C30)		$ 6.75	1	$ 6.75	$ 8.60	1	$ 8.60
95	**3113**	UNION 1IN FPT BRASS (S06-C31)		$ 8.94	1	$ 8.94	$ 11.40	1	$ 11.40
96	**3126**	UNION 1 1/2IN FPT - BRASS (S06-C32)		$ 15.46	1	$ 15.46	$ 19.60	1	$ 19.60
97	**3127**	UNION 2IN 3/PC FPT BRASS - 3020U (S06-C33)	3020U	$ 23.79	1	$ 23.79	$ 30.20	1	$ 30.20
98	**3481**	VALVE 1 X 3/4IN STRAIGHT BALL 5/BX- B43-342WG (S06-D29)	B43-342WG	$ 41.69	2	$ 83.38	$ 44.77	2	$ 89.54
99	**3484**	VALVE 1X1IN STRAIGHT BALL - BRASS (S06-D31)		$ 45.92	1	$ 45.92	$ 49.82	1	$ 49.82
100	**3978**	VALVE 1-1/2IN BALL FPT BRASS 3415BM200 (S06-C07)	3415BM200	$ 17.88	47	$ 840.36	$ 18.80	47	$ 883.60

SUPPLIERS FOR WATER AND SEWER PRODUCTS
BID TABULATION
E-BID #20120009

	A	B	E	G	H	I	J	K	L
1		**Company Name:**		**HD WATERWORKS**			**FERGUSON WATERWORKS**		
2	**Item**	**Item Description**	**Mfg. Part No.**	**Unit Price**	**Yrly Qty Est**	**Total**	**Unit Price**	**Yrly Qty Est**	**Total**
101	**4039**	VALVE 4IN GATE BRASS FPT #300 PART #3440GM300 (S06-C10)	3440GM300	$ 119.97	1	$ 119.97	$ 112.30	1	$ 112.30
102	**5325**	COUPLING 1IN DOUBLE COMP BRASS - C44-44G CTS GRIP *12 PER BX* (S06-D	C44-44G	$ 11.69	152	$ 1,776.88	$ 12.25	152	$ 1,862.00
103	**5380**	COUPLING 2IN GRIP/JOINT BRASS - C84-77G MPTxCTS/GJ (S06-D18)	C84-77G	$ 35.54	16	$ 568.64	$ 37.99	16	$ 607.84
104	**5381**	ELL 90 1IN COMP.GRIP BRASS - L44-44G FORD *8 PER BX* (S06-D21)	L44-44G	$ 16.96	129	$ 2,187.84	$ 17.77	129	$ 2,292.33
105	**5383**	VALVE 3/4x1IN ANGLE U-BRANCH - UV-43-42-WG FORD *8 PER BX* (S06-F0	UV-43-42-WG	$ 63.11	464	$ 29,283.04	$ 64.62	464	$ 29,983.68
106	**5384**	CORP STOP 1IN BRASS MPTxCTS/G - F1100-4G FORD *6 PER BX* (S06-D24)	F1100-4G	$ 28.34	386	$ 10,939.24	$ 29.01	386	$ 11,197.86
107	**5389**	COUPLING 1-1/2IN FPTxFPT BRASS - 30155 (S06-C15)	30155	$ 6.75	3	$ 20.25	$ 8.60	3	$ 25.80
108	**5390**	VALVE ANGLE 3/4 x 1IN BRASS - KV43-342WG GRIP JNT (S06-D25)	KV43-342WG	$ 24.62	315	$ 7,755.30	$ 25.21	315	$ 7,941.15
109	**5403**	VALVE 3IN GATE BRASS FPT - FIG. M300 (S06-C09)	M300	$ 68.10	1	$ 68.10	$ 70.50	1	$ 70.50
110	**5406**	BALL 1-1/2IN CURB STOP FPTxFPT - BRASS FORD B11-666W *2 PER BX* (S06-	B11-666W	$ 84.94	1	$ 84.94	$ 89.04	1	$ 89.04
111	**5429**	NUT ASSEM 1IN/FORD GRIP JOINTS - GJN4-4 (S06-B26)	GJN4-4	$ 5.70	1	$ 5.70	$ 5.46	1	$ 5.46
112	**5430**	NUT ASSEM 2IN/FORD GRIP JOINTS - GJN4-7 (S06-B25)	GJN4-7	$ 16.51	1	$ 16.51	$ 16.13	1	$ 16.13
113	**5471**	COUPLING 3/4IN DBL COMP BRASS GRIP/JOINT C44-33G 14/BX (S06-D19)	C44-33G	$ 10.21	3	$ 30.63	$ 10.96	3	$ 32.88
114	**5476**	COUPLING 3/4IN FPT x FPT - BRASS (S06-C13)		$ 2.09	14	$ 29.26	$ 2.70	14	$ 37.80
115	**5477**	COUPLING 1IN FPT x FPT BRASS (S06-C14)		$ 3.18	9	$ 28.62	$ 4.10	9	$ 36.90
116	**5479**	NIPPLE 1IN X 6IN TBE BRASS (S06-E19)		$ 7.27	14	$ 101.78	$ 8.70	14	$ 121.80
117	**5588**	NIPPLE 3/4 IN X 6 IN BRASS TBE (S06-E24)		$ 4.97	4	$ 19.88	$ 6.00	4	$ 24.00
118	**5589**	NIPPLE 1 IN X 4 IN BRASS TBE (S06-E20)		$ 4.94	12	$ 59.28	$ 5.90	12	$ 70.80
119	**5590**	NIPPLE 3/4 IN X 4 IN BRASS TBE (S06-E25)		$ 3.41	4	$ 13.64	$ 4.10	4	$ 16.40
120	**5677**	NIPPLE 2IN X 6IN BRASS TBE (S06-E16)		$ 16.44	14	$ 230.16	$ 19.70	14	$ 275.80
121	**5748**	VALVE SWING CHECK 2" BRASS M31 2 PER BX (S06-C36)	M31	$ 26.43	11	$ 290.73	$ 27.50	11	$ 302.50
122	**5771**	ELL 90 3/4IN COMP GRIP BRASS L44-33G (S06-D16)	L44-33G	$ 13.20	1	$ 13.20	$ 14.17	1	$ 14.17
123	**5802**	VALVE 3/4IN X 3/4IN BALL CURB - FORD #B43-332W-G *5 PER BX* (S06-D11	B43-332W-G	$ 38.57	21	$ 809.97	$ 41.41	21	$ 869.61
124	**5898**	NIPPLE 3/4 x 12IN BRASS (S06-E05)		$ 9.54	1	$ 9.54	$ 11.40	1	$ 11.40
125	**5899**	NIPPLE 3/4 x 18IN BRASS (S06-E07)		$ 15.02	1	$ 15.02	$ 17.50	1	$ 17.50
126	**5900**	NIPPLE 3/4 x 24IN BRASS (S06-E09)		$ 20.03	2	$ 40.06	$ 23.30	2	$ 46.60
127	**5901**	NIPPLE 1 x 12IN BRASS (S06-E06)		$ 14.30	4	$ 57.20	$ 17.10	4	$ 68.40
128	**5902**	NIPPLE 1 x 18IN BRASS (S06-E08)		$ 22.52	1	$ 22.52	$ 26.20	1	$ 26.20
129	**5903**	NIPPLE 1 x 24IN BRASS (S06-E11)		$ 30.04	2	$ 60.08	$ 34.90	2	$ 69.80
130	**5904**	NIPPLE 2 x 12IN BRASS (S06-E10)		$ 32.40	2	$ 64.80	$ 38.80	2	$ 77.60
131	**5905**	NIPPLE 2 x18IN BRASS (S06-E13)		$ 51.03	2	$ 102.06	$ 59.30	2	$ 118.60
132	**5906**	NIPPLE 2 x 24IN BRASS (S06-E12)		$ 68.03	1	$ 68.03	$ 82.30	1	$ 82.30
133	**5918**	VALVE 1 1/2 IN FPT x FPT - 2621-015 (S05-D03)	2621-015	$ 15.50	2	$ 31.00	$ 18.80	2	$ 37.60

SUPPLIERS FOR WATER AND SEWER PRODUCTS
BID TABULATION
E-BID #20120009

	A	B	E	G	H	I	J	K	L
1		**Company Name:**		**HD WATERWORKS**			**FERGUSON WATERWORKS**		
2	Item	Item Description	Mfg. Part No.	Unit Price	Yrly Qty Est	Total	Unit Price	Yrly Qty Est	Total
134	5927	COPR STOP 3/4 IN BRASS - 3/4 IN F1100-3-G *10 PER BX* (S06-D14)	F1100-3-G	$ 18.73	1	$ 18.73	$ 20.11	1	$ 20.11
135	5983	COUPLING COMP. 1 1/2" BRASS C44-66G (S06-D08)	C44-66G	$ 35.74	1	$ 35.74	$ 38.38	1	$ 38.38
136	5984	MALE ADPT. COMP. 1 1/2" BRASS C84-66G (S06-D07)	C84-66G	$ 24.87	1	$ 24.87	$ 26.80	1	$ 26.80
137	6015	VALVE 1 1/2 CHECK SINGLE HS11-666 *4 PER BX* (S06-E44)	HS11-666	$ 90.97	1	$ 90.97	$ 82.10	1	$ 82.10
138	6031	MARKER BRASS - FOR 2" SEWER F/M (S10-D11)		$ 11.36	1	$ 11.36	$ 15.00	1	$ 15.00
139	6070	VALVE BALL METER B13-332W 3/4x1 *6 PER BX* (S06-D13)	B13-332W	$ 40.84	11	$ 449.24	$ 36.90	11	$ 405.90
140	6071	VALVE BALL METER B13-344W 3/4x1 *5 PER BX* (S06-D12)	B13-344W	$ 44.54	1	$ 44.54	$ 40.20	1	$ 40.20
141	6072	MARKER BRASS - FOR 4" WATER VALVE (S10-D12)		$ 11.36	2	$ 22.72	$ 15.00	2	$ 30.00
142	6074	MARKER BRASS - FOR 6" WATER VALVE (S10-D13)		$ 11.36	1	$ 11.36	$ 15.00	1	$ 15.00
143	6075	MARKER BRASS - FOR 8" WATER VALVE (S10-D14)		$ 11.36	1	$ 11.36	$ 15.00	1	$ 15.00
144	6076	MARKER BRASS - FOR 10" WATER VALVE (S10-D15)		$ 11.36	1	$ 11.36	$ 15.00	1	$ 15.00
145	6077	MARKER BRASS - FOR 12" WATER VALVE (S10-D16)		$ 11.36	1	$ 11.36	$ 15.00	1	$ 15.00
146	6078	MARKER BRASS - FOR 16" WATER VALVE (S10-D17)		$ 11.36	1	$ 11.36	$ 15.00	1	$ 15.00
147	6079	MARKER BRASS - FOR 20" WATER VALVE (S10-D18)		$ 11.36	1	$ 11.36	$ 15.00	1	$ 15.00
148	6080	MARKER BRASS - FOR 24" WATER VALVE (S10-D19)		$ 11.36	1	$ 11.36	$ 15.00	1	$ 15.00
149	6081	MARKER BRASS - FOR 30" WATER VALVE (S10-D20)		$ 11.36	1	$ 11.36	$ 15.00	1	$ 15.00
150	6082	MARKER BRASS - FOR 36" WATER VALVE (S10-D21)		$ 11.36	1	$ 11.36	$ 15.00	1	$ 15.00
151	6083	MARKER BRASS - FOR 42" WATER VALVE (S10-D22)		$ 11.36	1	$ 11.36	$ 15.00	1	$ 15.00
152		**2. SUBTOTAL**				**$ 166,673.58**			**$ 178,701.45**
153		**3. D/I PARTS, ALL TYPES AMERICAN OR APPROVED EQUAL**							
155	680	GASKET 12IN FIELD LOCK (S08-A01)		$ 175.97	1	$ 175.97	$ 97.76	1	$ 97.76
156	734	MEGALUG 10 IN FOR D/I PIPE (S11-D21)		$ 47.30	1	$ 47.30	$ 47.70	1	$ 47.70
157	834	RISER 1IN VALVE BOX - 59VR010I (S09-D17)	59VR010I	$ 5.11	44	$ 224.84	$ 4.80	44	$ 211.20
158	835	RISER 2IN VALVE BOX - 59VR020I (S09-D18)	59VR020I	$ 10.90	63	$ 686.70	$ 10.80	63	$ 680.40
159	836	RISER 3IN VALVE BOX - 59VR030I (S09-D19)	59VR030I	$ 16.35	49	$ 801.15	$ 14.40	49	$ 705.60
160	837	RISER 4IN VALVE BOX - 59VR040I (S09-D20)	59VR040I	$ 21.81	36	$ 785.16	$ 20.80	36	$ 748.80
161	868	GASKET RUBBER 7.25-7.65 F/STEEL COUPLING (S10-A23)		$ 11.73	1	$ 11.73	$ 30.00	1	$ 30.00
162	869	GASKET 9.40-9.74 STEEL COUPLIN - FORD PN=20377 (S10-A24)	20377	$ 9.97	1	$ 9.97	$ 30.00	1	$ 30.00
163	870	GASKET RUBBER 9.46-9.85 F/STEEL COUPLING (S10-A25)		$ 9.97	1	$ 9.97	$ 30.00	1	$ 30.00
164	871	GASKET RUBBER 6.63 F/STEEL COUPLING (S10-A26)		$ 7.82	1	$ 7.82	$ 30.00	1	$ 30.00
165	872	GASKET RUBBER 8.60-9.06 F/STEEL COUPLING (S10-A27)		$ 9.97	1	$ 9.97	$ 30.00	1	$ 30.00
166	873	GASKET RUBBER F/STEEL COUPLING - PN=33813 (S10-A28)	33813	$ 18.90	1	$ 18.90	$ 30.00	1	$ 30.00

SUPPLIERS FOR WATER AND SEWER PRODUCTS
BID TABULATION
E-BID #20120009

	A	B	E	G	H	I	J	K	L
1		**Company Name:**		**HD WATERWORKS**			**FERGUSON WATERWORKS**		
2	**Item**	**Item Description**	**Mfg. Part No.**	**Unit Price**	**Yrly Qty Est**	**Total**	**Unit Price**	**Yrly Qty Est**	**Total**
167	**874**	GASKET RUBBER 11.90-12.20 - F/STEEL COUPLING (S10-A29)		$ 12.46	1	$ 12.46	$ 30.00	1	$ 30.00
168	**901**	KIT 3IN COMPANION FLANGE D/I (S11-B02)		$ 12.29	1	$ 12.29	$ 13.30	1	$ 13.30
169	**902**	KIT 4IN COMPANION FLANGE - DUCTILE IRON (S11-B04)		$ 15.13	1	$ 15.13	$ 18.00	1	$ 18.00
170	**903**	KIT 6IN RESTRAINER - 1300 SINGLE FLANGE (S11-A04)		$ 36.88	1	$ 36.88	$ 24.50	1	$ 24.50
171	**904**	RESTRAINER FOR 8" PVC BELL JOINT - 1390 1300 (S11-B07)		$ 59.67	1	$ 59.67	$ 64.07	1	$ 64.07
172	**905**	KIT MJ 3IN ACCESSORY (S11-B01)		$ 7.81	1	$ 7.81	$ 8.50	1	$ 8.50
173	**906**	KIT MJ 4IN ACCESSORY (S11-B03)		$ 10.74	7	$ 75.18	$ 9.90	7	$ 69.30
174	**907**	KIT MJ 6IN ACC. WITH GLAND - FLANGE/GASKET/T-BOLT (S11-B05)		$ 14.65	1	$ 14.65	$ 17.60	1	$ 17.60
175	**908**	KIT MJ 8IN ACCESSORY (S11-B08)		$ 16.60	2	$ 33.20	$ 13.50	2	$ 27.00
176	**909**	KIT MJ 10IN ACCESSORY (S11-B09)		$ 23.93	1	$ 23.93	$ 17.70	1	$ 17.70
177	**910**	KIT MJ 12IN ACCESSORY - PART #21AMMJR12 (S11-B10)	21AMMJR12	$ 24.91	1	$ 24.91	$ 19.10	1	$ 19.10
178	**911**	KIT MJ 16IN ACCESSORY (S11-B12)		$ 41.02	1	$ 41.02	$ 30.20	1	$ 30.20
179	**912**	GASKET 3IN MJ RUBBER (S11-C01)		$ 1.31	1	$ 1.31	$ 3.10	1	$ 3.10
180	**913**	GASKET 3IN RUBBER TRANSITION - PART #21AMG503 (S11-C02)	21AMG503	$ 2.16	1	$ 2.16	$ 2.90	1	$ 2.90
181	**914**	GASKET MJ 4IN RUBBER (S11-C03)		$ 2.34	24	$ 56.16	$ 3.10	24	$ 74.40
182	**915**	GASKET 4IN RUBBER TRANSITION (S11-C04)		$ 2.81	16	$ 44.96	$ 3.70	16	$ 59.20
183	**916**	GASKET 6IN MJ RUBBER - FOR D/I PIPE (S11-C05)		$ 2.34	71	$ 166.14	$ 3.10	71	$ 220.10
184	**917**	GASKET 6IN TRANSITION RUBBER - 21AMG506 (S11-C06)	21AMG506	$ 3.42	6	$ 20.52	$ 4.50	6	$ 27.00
185	**918**	GASKET MJ 8IN RUBBER (S11-C07)		$ 2.93	24	$ 70.32	$ 3.90	24	$ 93.60
186	**919**	GASKET 8IN TRANSITION RUBBER (S11-C08)		$ 3.49	1	$ 3.49	$ 6.30	1	$ 6.30
187	**920**	GASKET 10IN MJ RUBBER (S11-C09)		$ 3.52	1	$ 3.52	$ 4.70	1	$ 4.70
188	**921**	GASKET 10IN TRANSITION RUBBER (S11-C10)		$ 5.73	1	$ 5.73	$ 7.60	1	$ 7.60
189	**922**	GASKET MJ 12IN RUBBER (S11-C11)		$ 4.75	23	$ 109.25	$ 6.30	23	$ 144.90
190	**923**	GASKET 12IN TRANSITION RUBBER (S11-C12)		$ 6.60	7	$ 46.20	$ 8.70	7	$ 60.90
191	**924**	GASKET MJ 16IN RUBBER (S11-C14)		$ 7.81	1	$ 7.81	$ 10.30	1	$ 10.30
192	**925**	GASKET MJ 18IN RUBBER (S11-C15)		$ 8.95	1	$ 8.95	$ 14.00	1	$ 14.00
193	**926**	FLANGE 3IN COMPANION D/I (S11-D01)		$ 9.54	4	$ 38.16	$ 13.89	4	$ 55.56
194	**927**	FLANGE 3IN UNION (S11-D02)		$ 14.93	2	$ 29.86	$ 19.58	2	$ 39.16
195	**928**	MEGALUG 3IN FOR D/I PIPE - PART #21AMF8031103 (S11-D03)	21AMF80311C	$ 16.72	1	$ 16.72	$ 16.90	1	$ 16.90
196	**929**	MEGALUG 3IN FOR PVC PIPE (S11-D04)		$ 20.26	1	$ 20.26	$ 20.50	1	$ 20.50
197	**930**	FLANGE 4IN SPLIT (S11-D05)		$ 16.83	1	$ 16.83	$ 40.78	1	$ 40.78
198	**931**	FLANGE 4IN FEMALE THD 8 HOLE - 2404FCCS STEEL (S11-D06)	2404FCCS	$ 15.13	1	$ 15.13	$ 22.58	1	$ 22.58
199	**932**	FLANGE 4 IN UNION - PART #2404FU (S11-D07)	2404FU	$ 25.26	4	$ 101.04	$ 25.74	4	$ 102.96

SUPPLIERS FOR WATER AND SEWER PRODUCTS
BID TABULATION
E-BID #20120009

	A	B	E	G	H	I	J	K	L
1		**Company Name:**		**HD WATERWORKS**			**FERGUSON WATERWORKS**		
2	**Item**	**Item Description**	**Mfg. Part No.**	**Unit Price**	**Yrly Qty Est**	**Total**	**Unit Price**	**Yrly Qty Est**	**Total**
200	**933**	MEGALUG 4IN FOR D/I PIPE (S11-D08)		$ 17.81	5	$ 89.05	$ 18.00	5	$ 90.00
201	**934**	MEGALUG 4IN FOR PVC PIPE (S11-D09)		$ 21.85	17	$ 371.45	$ 22.10	17	$ 375.70
202	**935**	FLANGE 6IN FEMALE THD 8 HOLE - STEEL (S11-D10)		$ 19.42	1	$ 19.42	$ 30.11	1	$ 30.11
203	**936**	FLANGE 6IN SPLIT (S11-D11)		$ 26.13	1	$ 26.13	$ 49.39	1	$ 49.39
204	**937**	MEGALUG 6IN FOR D/I PIPE (S11-D12)		$ 20.94	4	$ 83.76	$ 21.20	4	$ 84.80
205	**938**	MEGALUG 6IN FOR PVC PIPE - 21AMF8062006PV (S11-D13)	21AMF806200	$ 26.48	26	$ 688.48	$ 26.80	26	$ 696.80
206	**939**	FLANGE 6IN UNION DUCTILE IRON (S11-D14)		$ 30.62	1	$ 30.62	$ 29.61	1	$ 29.61
207	**940**	FLANGE 8IN UNION (S11-D15)		$ 37.74	1	$ 37.74	$ 41.16	1	$ 41.16
208	**941**	MEGALUG 8IN FOR D/I PIPE (S11-D16)		$ 29.37	2	$ 58.74	$ 32.30	2	$ 64.60
209	**942**	MEGALUG 8IN FOR PVC PIPE (S11-D17)		$ 39.17	24	$ 940.08	$ 39.50	24	$ 948.00
210	**943**	RING 8IN SPLIT 1300 (S11-D18)	1300	$ 34.72	1	$ 34.72	$ 37.28	1	$ 37.28
211	**944**	FLANGE 10 IN UNION (S11-D19)		$ 54.46	1	$ 54.46	$ 72.59	1	$ 72.59
212	**945**	MEGALUG 10IN FOR PVC PIPE (S11-D20)		$ 74.06	1	$ 74.06	$ 74.70	1	$ 74.70
213	**946**	RESTRAINT 12IN SPLIT 1300C (S11-B11)	1300C	$ 66.31	1	$ 66.31	$ 71.21	1	$ 71.21
214	**947**	MEGALUG 12IN FOR D/I PIPE (S11-E02)		$ 68.80	1	$ 68.80	$ 69.40	1	$ 69.40
215	**948**	FLANGE 12 IN UNION (S11-E03)		$ 63.02	1	$ 63.02	$ 86.51	1	$ 86.51
216	**949**	MEGALUG 12IN FOR PVC PIPE (S11-E01)		$ 77.84	32	$ 2,490.88	$ 78.50	32	$ 2,512.00
217	**950**	MEGALUG 16IN FOR D/I PIPE (S11-E04)		$ 125.47	1	$ 125.47	$ 126.40	1	$ 126.40
218	**951**	MEGALUG 16IN FOR PVC PIPE (S11-E05)		$ 166.60	1	$ 166.60	$ 167.90	1	$ 167.90
219	**952**	FLANGE 16IN UNION (S11-E06)		$ 229.32	1	$ 229.32	$ 246.24	1	$ 246.24
220	**953**	MEGALUG 18IN FOR D/I PIPE (S11-E07)		$ 177.73	1	$ 177.73	$ 179.10	1	$ 179.10
221	**954**	MEGALUG 18IN FOR PVC PIPE (S11-E08)		$ 206.64	1	$ 206.64	$ 208.20	1	$ 208.20
222	**955**	FLANGE 18IN UNION-400C (S11-E09)	400C	$ 259.25	1	$ 259.25	$ 278.39	1	$ 278.39
223	**956**	FLANGE 20IN UNION-400C (S11-E10)	400C	$ 313.45	2	$ 626.90	$ 336.59	2	$ 673.18
224	**957**	MEGALUG 20IN FOR PVC PIPE (S11-E11)		$ 256.18	1	$ 256.18	$ 258.10	1	$ 258.10
225	**996**	BOLT 5/8 X 3IN T-HEAD & NUT 120 b/x (S12-E14)		$ 0.68	4	$ 2.72	$ 1.10	4	$ 4.40
226	**997**	BOLT 3/4 X 4IN T-HEAD & NUT - NON-ROTATING (S12-E16)		$ 1.48	24	$ 35.52	$ 1.40	24	$ 33.60
227	**998**	BOLT 3/4 X 4IN T-HEAD - 60 PER BOX (S12-E17)		$ 1.02	276	$ 281.52	$ 2.30	276	$ 634.80
228	**999**	BOLT 3/4 X 4-1/2IN T-HEAD - & NUT (S12-E18)		$ 1.07	73	$ 78.11	$ 2.60	73	$ 189.80
229	**1000**	BOLT 3/4 X 4-1/2IN T-HEAD &NUT - NON ROTATING (S12-E19)		$ 1.50	1	$ 1.50	$ 1.50	1	$ 1.50
230	**1001**	BOLT 3/4 X 5IN T-HEAD & NUT (S12-E20)		$ 1.18	52	$ 61.36	$ 1.60	52	$ 83.20
231	**1002**	EYEBOLT 3/4IN ANGLED *DUC-LUG* (S12-E21)		$ 1.56	8	$ 12.48	$ 2.50	8	$ 20.00
232	**1194**	BEND 90 3IN FLANGED DI - PART #24039F (YD-67)	24039F	$ 37.48	1	$ 37.48	$ 43.42	1	$ 43.42

SUPPLIERS FOR WATER AND SEWER PRODUCTS
BID TABULATION
E-BID #20120009

	A	B	E	G	H	I	J	K	L
1		**Company Name:**		**HD WATERWORKS**			**FERGUSON WATERWORKS**		
2	**Item**	**Item Description**	**Mfg. Part No.**	**Unit Price**	**Yrly Qty Est**	**Total**	**Unit Price**	**Yrly Qty Est**	**Total**
233	**1195**	FLANGE 3IN MJ DI (YD-68)		$ 3.36	1	$ 3.36	$ 29.53	1	$ 29.53
234	**1196**	CAP 3IN MJ DI (YD- 70)		$ 10.99	1	$ 10.99	$ 12.74	1	$ 12.74
235	**1197**	BEND 45 3IN MJ DI (YD-69)		$ 25.48	1	$ 25.48	$ 29.60	1	$ 29.60
236	**1199**	SLEEVE 3 x 12IN MJ DI (YD-64)		$ 23.99	1	$ 23.99	$ 27.80	1	$ 27.80
237	**1200**	BEND 45 4IN FLANGED DI (YD-62)		$ 51.47	1	$ 51.47	$ 59.70	1	$ 59.70
238	**1201**	BEND 90 4IN FLANGED DI C/L C110 (YD-63)		$ 57.97	1	$ 57.97	$ 67.20	1	$ 67.20
239	**1202**	PLUG 4IN MJ DI (YD-60)		$ 13.49	1	$ 13.49	$ 15.70	1	$ 15.70
240	**1203**	CAP 4IN MJ DI (YD-61)		$ 11.49	1	$ 11.49	$ 13.40	1	$ 13.40
241	**1204**	FLANGE 4IN MJ DI (YD-58)		$ 5.50	7	$ 38.50	$ 34.20	7	$ 239.40
242	**1205**	BEND 45 4IN MJ DI (YD-59)		$ 25.48	1	$ 25.48	$ 29.60	1	$ 29.60
243	**1206**	BEND 90 4IN MJ DI (YD-56)		$ 30.98	1	$ 30.98	$ 35.90	1	$ 35.90
244	**1207**	FLANGE 4IN WELD NECK - R.F. #150 B-16-A105 (S09-A03)	150 B-16-A105	$ 14.85	1	$ 14.85	$ 150.00	1	$ 150.00
245	**1208**	SLEEVE 4 x 12IN MJ DI - NOT COATED (YD-53)		$ 25.48	6	$ 152.88	$ 29.60	6	$ 177.60
246	**1209**	CAP 6IN MJ DI (YD-50)		$ 20.49	1	$ 20.49	$ 23.80	1	$ 23.80
247	**1210**	PLUG 6IN MJ DI (YD-51)		$ 25.48	1	$ 25.48	$ 29.60	1	$ 29.60
248	**1211**	FLANGE 6IN UNI-FLANGE - TWO HOLE FOR DI (YD-52)		$ 23.12	1	$ 23.12	$ 29.61	1	$ 29.61
249	**1212**	FLANGE 6IN MJ DI (YD-49)		$ 5.87	11	$ 64.57	$ 47.50	11	$ 522.50
250	**1213**	BEND 45 6IN FLANGED DI (YD-48)		$ 79.45	1	$ 79.45	$ 92.10	1	$ 92.10
251	**1214**	BEND 45 6IN MJ DI (YD-47)		$ 41.47	1	$ 41.47	$ 48.10	1	$ 48.10
252	**1215**	BEND 90 6IN FLANGED DI - EPOXY LINED	EPOXY LINED	$ 140.77	1	$ 140.77	$ 215.60	1	$ 215.60
253	**1216**	BEND 90 6IN MJ X SPIGOT DI (YD-45)		$ 61.96	1	$ 61.96	$ 71.80	1	$ 71.80
254	**1217**	BEND 90 6IN MJ DI CEMENT LINED YD-44)	CEMENT LINED	$ 50.97	1	$ 50.97	$ 59.10	1	$ 59.10
255	**1218**	SLEEVE 6 X 12IN MJ DI - CEMENT LINED (YD-43)	CEMENT LINED	$ 45.97	12	$ 551.64	$ 53.30	12	$ 639.60
256	**1219**	TEE 6 X 6 X 6 MJ DI (YD-41)		$ 74.46	1	$ 74.46	$ 86.30	1	$ 86.30
257	**1220**	FLANGE 8 IN MJ DI (YD-40)		$ 7.76	1	$ 7.76	$ 72.40	1	$ 72.40
258	**1221**	CAP 8IN MJ DI - 2108CT (YD-39)		$ 33.48	1	$ 33.48	$ 38.80	1	$ 38.80
259	**1222**	BEND 45 8 IN MJ DI CEMENT LINED (YD-38)	CEMENT LINED	$ 60.46	1	$ 60.46	$ 70.10	1	$ 70.10
260	**1223**	SLEEVE 8 X 12 MJ DI (YD-37)		$ 75.45	6	$ 452.70	$ 87.50	6	$ 525.00
261	**1224**	FLANGE 10 IN MJ DI (YD-36)		$ 11.37	1	$ 11.37	$ 125.70	1	$ 125.70
262	**1225**	BEND 45 10 IN MJ DI (YD-35)		$ 88.45	1	$ 88.45	$ 102.50	1	$ 102.50
263	**1226**	SLEEVE 10 X 12 IN MJ DI (YD-34)		$ 90.45	1	$ 90.45	$ 104.80	1	$ 104.80
264	**1227**	FLANGE 12 IN MJ DI (YD-33)		$ 11.74	1	$ 11.74	$ 161.00	1	$ 161.00
265	**1228**	CAP 12 IN MJ DI (YD-32)		$ 63.96	4	$ 255.84	$ 74.20	4	$ 296.80

SUPPLIERS FOR WATER AND SEWER PRODUCTS
BID TABULATION
E-BID #20120009

	A	B	E	G	H	I	J	K	L
1		**Company Name:**		**HD WATERWORKS**			**FERGUSON WATERWORKS**		
2	**Item**	**Item Description**	**Mfg. Part No.**	**Unit Price**	**Yrly Qty Est**	**Total**	**Unit Price**	**Yrly Qty Est**	**Total**
266	**1229**	BEND 45 12IN MJ DI CEMENT LINED (YD-31)	CEMENT LINED	$ 132.42	1	$ 132.42	$ 153.50	1	$ 153.50
267	**1230**	SLEEVE 12IN X 12IN MJ DI (YD-30)		$ 121.93	11	$ 1,341.23	$ 141.30	11	$ 1,554.30
268	**1232**	BEND 90 12 IN FLANGED DI (YD-28)		$ 306.82	1	$ 306.82	$ 355.50	1	$ 355.50
269	**1233**	FLANGE 16 IN MJ DI (YD-27)		$ 19.49	1	$ 19.49	$ 293.00	1	$ 293.00
270	**1234**	SLEEVE 16 X 15 IN MJ DI (YD-26)		$ 233.86	1	$ 233.86	$ 271.00	1	$ 271.00
271	**1235**	FLANGE 18 IN MJ DI (YD-25)		$ 33.86	1	$ 33.86	$ 448.20	1	$ 448.20
272	**1236**	SLEEVE 18 X 15 IN MJ DI (YD-23)		$ 299.32	1	$ 299.32	$ 346.80	1	$ 346.80
273	**1237**	FLANGE 20 IN MJ DI (YD-21)		$ 47.47	1	$ 47.47	$ 533.30	1	$ 533.30
274	**1238**	SLEEVE 20 X 15 IN MJ DI (YD-20)		$ 361.28	1	$ 361.28	$ 418.60	1	$ 418.60
275	**1239**	LID WATER LOCKING (YD-74)		$ 15.22	11	$ 167.42	$ 18.80	11	$ 206.80
276	**1240**	LID SEWER VALVE BOX LOCKING (YD-71)		$ 15.22	2	$ 30.44	$ 18.80	2	$ 37.60
277	**1241**	LID WATER NON LOCKING - 5-1/4IN (YD-75)		$ 10.33	85	$ 878.05	$ 12.50	85	$ 1,062.50
278	**1242**	VALVE BOX TOP DI 461S (YD-73)	461S	$ 17.38	13	$ 225.94	$ 19.20	13	$ 249.60
279	**1244**	VALVE BOX TOP & BOTTOM - 461-S LESS LID (YD-76)	461-S	$ 31.69	61	$ 1,933.09	$ 35.00	61	$ 2,135.00
280	**1254**	REDUCER 6 X 4 IN MJ DI (YD-11)		$ 29.48	1	$ 29.48	$ 34.20	1	$ 34.20
281	**1255**	REDUCER 8 X 6 IN MJ DI (YD-12)		$ 42.97	1	$ 42.97	$ 49.80	1	$ 49.80
282	**1256**	TEE 6 X 6 X 4 IN MJ DI CEMENT LINED (YD-22)	CEMENT LINED	$ 68.96	1	$ 68.96	$ 79.90	1	$ 79.90
283	**1397**	WYE 2-1/2IN X 2-1/2IN PUSH ON - EPOXY COATED FOR D/I (S09-A02)	EPOXY COATED	$ 57.24	1	$ 57.24	$ 150.00	1	$ 150.00
284	**2498**	TEE 4 X 4 X 4 IN MJ DI (YD-57)		$ 40.98	1	$ 40.98	$ 47.50	1	$ 47.50
285	**2502**	BEND 11-1/4 3 IN MJ CP DI (YD-66)		$ 18.99	1	$ 18.99	$ 22.00	1	$ 22.00
286	**2503**	BEND 11-1/4 4 IN MJ CP DI C153 (YD-55)		$ 22.99	1	$ 22.99	$ 26.70	1	$ 26.70
287	**2504**	BEND 22-1/2 3 IN CP DI C153 (YD-65)		$ 15.99	1	$ 15.99	$ 18.60	1	$ 18.60
288	**2505**	BEND 22-1/2 4IN MJ CP DI C153 (YD-54)		$ 24.49	1	$ 24.49	$ 28.40	1	$ 28.40
289	**2805**	BOLT 3/4 X 3-1/2IN T-HEAD & - NUT *85 PER BX* (S12-E15)		$ 0.95	517	$ 491.15	$ 2.10	517	$ 1,085.70
290	**2814**	BEND 90 12IN MJ DI - 21129M (YD-29)	21129M	$ 159.90	1	$ 159.90	$ 185.30	1	$ 185.30
291	**2815**	LID SEWER NON LOCKING (YD-72)		$ 10.33	8	$ 82.64	$ 12.50	8	$ 100.00
292	**5021**	FLANGE 8 IN BLIND D/I - 8 HOLE		$ 79.54	1	$ 79.54	$ 52.70	1	$ 52.70
293	**5388**	ELL 45 DEG. 4IN GALV FPTxFPT		$ 73.88	1	$ 73.88	$ 47.90	1	$ 47.90
294	**5462**	EXTENSION 6FT VALVE STEM - PART #65VSE060C	65VSE060C	$ 77.45	1	$ 77.45	$ 106.67	1	$ 106.67
295	**5642**	ELL 45 12IN MJ DI		$ 132.42	1	$ 132.42	$ 153.50	1	$ 153.50
296	**5643**	KIT 12IN MEGALUG ACCESSORY - FOR PVC		$ 99.28	1	$ 99.28	$ 20.90	1	$ 20.90
297	**5772**	SLEEVE 12 X 6IN TAPPING D/I - OD 13.20-13.50		$ 827.73	1	$ 827.73	$ 935.70	1	$ 935.70
298	**5781**	TEE 3 x 3 x 3IN FLANGED D/I - PART #2403T030F	2403T030F	$ 53.47	1	$ 53.47	$ 62.00	1	$ 62.00

SUPPLIERS FOR WATER AND SEWER PRODUCTS
BID TABULATION
E-BID #20120009

	A	B	E	G	H	I	J	K	L
1		**Company Name:**		**HD WATERWORKS**			**FERGUSON WATERWORKS**		
2	**Item**	**Item Description**	**Mfg. Part No.**	**Unit Price**	**Yrly Qty Est**	**Total**	**Unit Price**	**Yrly Qty Est**	**Total**
299	**5782**	TEE 3 x 3 x 2IN FLANGED D/I - BRANCH IS 2IN		$ 56.97	1	$ 56.97	$ 66.00	1	$ 66.00
300	**5783**	FLANGE 2 IN COMPANION - WITH 2IN FIPT		$ 6.54	1	$ 6.54	$ 16.80	1	$ 16.80
301	**5784**	SLEEVE 3IN X 12IN FLANGED - D/I SPOOL PIECE		$ 132.38	1	$ 132.38	$ 138.90	1	$ 138.90
302	**5786**	TEE 3 x 3 x 3IN MJ D/I - PART #2103T030M	2103T030M	$ 38.48	1	$ 38.48	$ 44.60	1	$ 44.60
303	**5787**	CAP 3IN MJ TAPPED W/2IN IPT - DUCTILE IRON		$ 23.49	1	$ 23.49	$ 27.30	1	$ 27.30
304	**5788**	REDUCER 6x4 DI EPOXY LINED - PART #2406R04FE	2406R04FE	$ 98.50	1	$ 98.50	$ 176.00	1	$ 176.00
305	**5791**	CROSS 6IN D/I EPOXY LINED - FLANGED #2406X060FE	2406X060FE	$ 352.81	1	$ 352.81	$ 344.90	1	$ 344.90
306	**5792**	FLANGE 6x4 REDUCING COMPANION - THRD D/I #2406FC40S	2406FC40S	$ 39.25	1	$ 39.25	$ 48.70	1	$ 48.70
307	**5804**	TEE 8IN FLANGED DUCTILE IRON		$ 220.87	1	$ 220.87	$ 255.90	1	$ 255.90
308	**5805**	TEE 6IN FLANGED DUCTILE IRON		$ 132.42	1	$ 132.42	$ 153.50	1	$ 153.50
309	**5808**	BEND 6IN 90 DEG D/I FLANGED - NOT LINED (YD-46)		$ 89.95	4	$ 359.80	$ 104.30	4	$ 417.20
310	**5822**	TEE 8 x 8 x 6IN DUCTILE IRON - FLANGED CEMENT LINED		$ 191.39	1	$ 191.39	$ 221.80	1	$ 221.80
311	**5828**	CAP 16IN DUCTILE IRON MJ - W/2" CENTER TH TAP (YD-24)		$ 149.91	1	$ 149.91	$ 173.70	1	$ 173.70
312	**5842**	CROSS 4IN DI EPOXY LINE FLANGD - PART #2404X040FE	2404X040FE	$ 244.30	1	$ 244.30	$ 216.30	1	$ 216.30
313	**5860**	FLANGE 12 IN BELL - 073019 for C-900 (S07-E09)		$ 108.63	1	$ 108.63	$ 179.40	1	$ 179.40
314	**5868**	RESTRAINT FOR 6in P.V.C. - 1390-C - 2 FLANGES (S11-B06)	1390-C	$ 29.78	1	$ 29.78	$ 44.80	1	$ 44.80
315	**5938**	GASKET 20" MJ (S11-C16)		$ 11.99	1	$ 11.99	$ 12.30	1	$ 12.30
316	**5939**	GASKET 24" MJ (S11-C17)		$ 14.85	1	$ 14.85	$ 15.29	1	$ 15.29
317	**5977**	TEE 8 X 8 X 6 MJ DI CEMENT LINED (ORDER ON REQUEST)		$ 111.43	1	$ 111.43	$ 107.20	1	$ 107.20
318	**6019**	TEE 24" EPOXY MJ (YD-14)		$ 1,420.15	1	$ 1,420.15	$ 1,690.70	1	$ 1,690.70
319	**6020**	SLEEVE 24" EPOXY MJ (YD-18)		$ 808.57	1	$ 808.57	$ 962.70	1	$ 962.70
320	**6021**	SLEEVE 12" EPOXY MJ (YD-42)		$ 274.90	1	$ 274.90	$ 327.30	1	$ 327.30
321	**6022**	MEGALUG 24IN FOR PVC PIPE (S10-E02)		$ 295.66	1	$ 295.66	$ 297.90	1	$ 297.90
322	**6023**	GASKET 24" MJ (S11-C18) SEE PART # 5939		$ 14.85	1	$ 14.85	$ 15.00	1	$ 15.00
323	**6105**	SLEEVE 6 X 12" MJ DI EPOXY COATED (YD-04)	EPOXY COATED	$ 123.22	1	$ 123.22	$ 153.40	1	$ 153.40
324		**3. SUBTOTAL**				**$ 27,977.34**			**$ 34,116.40**
325		**4. DUCTILE IRON PIPE / McWANE OR APPROVED EQUAL**							
326	**1185**	PIPE 3IN DI C/51 CEMENT LINED (PR4-A01)	C/51 CEMENT LINED	$ 28.34	1	$ 28.34	$ 39.40	1	$ 39.40
327	**1186**	PIPE 4IN DI C/51 CEMENT LINED (PR4-A02)	C/51 CEMENT LINED	$ 17.24	5	$ 86.20	$ 20.24	5	$ 101.20
328	**1187**	PIPE 6IN D/I CEMENT LINED - CLASS 51 (PR4-C01)	C/51 CEMENT LINED	$ 18.49	1	$ 18.49	$ 21.71	1	$ 21.71
329	**1188**	PIPE 8IN DI C/51 CEMENT LINED (PR3-A01)	C/51 CEMENT LINED	$ 25.34	1	$ 25.34	$ 29.75	1	$ 29.75
330	**2099**	PIPE 10IN CLASS 51 EPOXY LINED - DI (PR3-C02)	C/51 EPOXY LINED	$ 59.23	1	$ 59.23	$ 69.53	1	$ 69.53
331	**2100**	PIPE 10IN CLASS 51 CEMENT LINE - DI (PR3-C01)	C/51 CEMENT LINED	$ 36.75	1	$ 36.75	$ 43.15	1	$ 43.15

SUPPLIERS FOR WATER AND SEWER PRODUCTS
BID TABULATION
E-BID #20120009

	A	B	E	G	H	I	J	K	L
1		**Company Name:**		**HD WATERWORKS**			**FERGUSON WATERWORKS**		
2	**Item**	**Item Description**	**Mfg. Part No.**	**Unit Price**	**Yrly Qty Est**	**Total**	**Unit Price**	**Yrly Qty Est**	**Total**
332	**2101**	PIPE 12IN CLASS 51 EPOXY LINED - DI (PR3-D01)	C/51 EPOXY LINED	$ 67.56	1	$ 67.56	$ 79.32	1	$ 79.32
333	**2102**	PIPE 12IN CLASS 51 CEMENT LINE - DI (PR3-E01)	C/51 CEMENT LINE	$ 42.25	1	$ 42.25	$ 49.60	1	$ 49.60
334	**2103**	PIPE 16IN CLASS 51 EPOXY LINED - DI (YDP-03)	C/51 EPOXY LINED	$ 93.27	1	$ 93.27	$ 109.51	1	$ 109.51
335	**2104**	PIPE 16IN CLASS 51 CEMENT LINE - DI (YDP-01)	C/51 CEMENT LINE	$ 61.53	1	$ 61.53	$ 72.24	1	$ 72.24
336	**2105**	PIPE 20IN CLASS 51 EPOXY LINED - DI (YDP-02)	C/51 EPOXY LINED	$ 105.96	1	$ 105.96	$ 139.04	1	$ 139.04
337	**2106**	PIPE 20IN CLASS 51 CEMENT LIN - DI (YDP-04)	C/51 CEMENT LINE	$ 79.50	1	$ 79.50	$ 93.33	1	$ 93.33
338	**2107**	PIPE 18IN CLASS 51 EPOXY LINED - DI (YDP-06)	C/51 EPOXY LINED	$ 101.81	1	$ 101.81	$ 136.84	1	$ 136.84
339	**2108**	PIPE 18IN CLASS 51 CEMENT LINE - DI (YDP-05)	C/51 CEMENT LINE	$ 77.62	1	$ 77.62	$ 91.13	1	$ 91.13
340	**2109**	PIPE 24IN CLASS 51 EPOXY LINED - DI (YDP-07)	C/51 EPOXY LINED	$ 131.51	1	$ 131.51	$ 172.56	1	$ 172.56
341	**2110**	PIPE 24IN CLASS 51 CEMENT LINE - DI (YDP-08)	C/51 CEMENT LINE	$ 98.69	1	$ 98.69	$ 115.87	1	$ 115.87
342	**5775**	PIPE 8IN DI EPOXY LINED	EPOXY LINED	$ 34.77	1	$ 34.77	$ 51.52	1	$ 51.52
343	**6104**	PIPE 6" CL-51 DI EPOXY LINED (PR4-B01)	CL/51 EPOXY LINED	$ 33.45	18	$ 602.10	$ 39.27	18	$ 706.86
344		**4. SUBTOTAL**				**$ 1,750.92**	$ -		**$ 2,122.56**
345		**5. FIRE HYDRANT & PARTS**							
346	**131**	COUPLING SAFETY STEM MUELLER 158259 - A-25 HYD PART (B02-01)	158259	$ 37.51	5	$ 187.55	$ 40.00	5	$ 200.00
347	**132**	NOZZLE LOCK 5 1/4 FIRE HYD (B02-14) 143137 A13	143137	$ 0.66	5	$ 3.30	$ 0.90	5	$ 4.50
348	**133**	PIN 3/32 X 1IN COTTER F/MUEL HYD - A29/195235 (B02-04)	A29/195235	$ 0.66	37	$ 24.42	$ 0.90	37	$ 33.30
349	**134**	PIN CLEVIS MUELLER HYD. A30 / 195234 (B02-03) 4 1/2" & 5 1/4"	195234	$ 6.53	4	$ 26.12	$ 6.43	4	$ 25.72
350	**135**	O-RING PUMPER NOZZLE A16 1988 - MULLER HYD. 5 1/4 (B02-07)	A16	$ 3.11	1	$ 3.11	$ 3.65	1	$ 3.65
351	**136**	O-RING BOTTOM SEAT MUELLER HYD. 4 1/2" A44 / 195161 (B02-06)	195161	$ 4.74	1	$ 4.74	$ 4.03	1	$ 4.03
352	**137**	O-RING BOTTOM SEAT MUELLER HYD. 5 1/4" A44 / 142893 (B02-05)	142893	$ 4.74	1	$ 4.74	$ 4.03	1	$ 4.03
353	**138**	O-RING M&H 5 1/4 1987 HYD A36 - 2-1/4 X 2-5/8 X 3/16 (B02-08)	A36	$ 2.81	2	$ 5.62	$ 4.03	2	$ 8.06
354	**139**	O-RING 4-1/2" & 5 1/4" T MUELLER HYD - A414 / 195271 (B02-09)	195271	$ 4.74	23	$ 109.02	$ 3.70	23	$ 85.10
355	**140**	O-RING HOLD DOWN NUT A3 / 194898 MUELLER 4 1/2" & 5 1/4"(B02-10)	194898	$ 4.74	24	$ 113.76	$ 3.75	24	$ 90.00
356	**141**	O-RING BONNET A5 / 142779 CENTURION, 4 1/2" & 5 1/4"(B02-16)	142779	$ 4.74	54	$ 255.96	$ 3.65	54	$ 197.10
357	**142**	WASHER ANTI-FRICTION A6 / 195546 CENTURION 4 1/2" & 5 1/4"(B02-15)	195546	$ 1.41	6	$ 8.46	$ 2.11	6	$ 12.66
358	**143**	GASKET 5-1/4 1988 MUELLER HYD A15 192345 CENTURION (S06-B44)	192345	$ 7.82	11	$ 86.02	$ 5.95	11	$ 65.45
359	**144**	HOOK S FOR HYD. 147738 (S06-B23)	147738	$ 1.23	51	$ 62.73	$ 1.44	51	$ 73.44
360	**145**	PLUG OIL BRASS A7 / 194932 4 1/2" & 5 1/4" (B02-12)	194932	$ 2.46	2	$ 4.92	$ 2.01	2	$ 4.02
361	**171**	O-RING 5 1/4 HYD HOUSING COVER B84B / 84-2-1 (B02-22)	B84B / 84-2-1	$ 5.69	1	$ 5.69	$ 3.70	1	$ 3.70
362	**172**	GASKET 5 1/4 HYD.HOUSING COVER B84B / 84-13 SEE PID# 622	B84B / 84-13	$ 5.69	1	$ 5.69	$ 7.00	1	$ 7.00
363	**332**	DIFFUSER 2 1/2 IN FOR HYDRANT - POLLARD P67501-100 (B13-A01)	P67501-100	$ 369.10	1	$ 369.10	$ 450.00	1	$ 450.00
364	**548**	OIL HYDRANT LUBE 1 GAL. - #51 (S15-A02)		$ 21.26	6	$ 127.56	$ 23.04	6	$ 138.24

SUPPLIERS FOR WATER AND SEWER PRODUCTS
BID TABULATION
E-BID #20120009

	A	B	E	G	H	I	J	K	L
1		**Company Name:**		**HD WATERWORKS**			**FERGUSON WATERWORKS**		
2	**Item**	**Item Description**	**Mfg. Part No.**	**Unit Price**	**Yrly Qty Est**	**Total**	**Unit Price**	**Yrly Qty Est**	**Total**
365	**573**	OPERATING NUT 146430 4 1/2&5 1/4 SUPR CENTURION 1987 OR LATER (S06-B11)	146430	$ 120.18	1	$ 120.18	$ 60.00	1	$ 60.00
366	**574**	OPERATING NUT / BRASS - 4 1/2 & 5 1/4 CHATTANOOGA ST 175001 (S06-B14)	175001	$ 120.18	1	$ 120.18	$ 60.00	1	$ 60.00
367	**576**	PIN & COTTER PIN F/ROD/COUP - F/AMER/DARL HYD		$ 3.18	1	$ 3.18	$ 7.00	1	$ 7.00
368	**577**	COUPLING ROD BREAKABLE 5-1/4 - AMER DAR HYD B84B HRP-3009 (S06-B18)	B84B HRP-3009	$ 42.22	1	$ 42.22	$ 52.00	1	$ 52.00
369	**579**	OPERATING NUT 4-1/2 WEATHR CAP - CLOW EDDY 1977 (S06-B19)		$ 26.50	1	$ 26.50	$ 52.80	1	$ 52.80
370	**580**	CAP PUMPER NOZZLE - 5 1/4 MUELLER C/I (S06-B21)		$ 112.09	1	$ 112.09	$ 220.00	1	$ 220.00
371	**581**	SCREW OIL FOR HOLD DOWN NUT 4 1/2&5 1/4 STANDRD TRAFFIC 190702 (S06-B12)	190702	$ 1.03	1	$ 1.03	$ 5.00	1	$ 5.00
372	**583**	BOLT 1/2" x 3" FIRE HYDRANT - BREAK-AWAY TYPE 280049 (S06-B24)	280049	$ 5.32	24	$ 127.68	$ 7.00	24	$ 168.00
373	**584**	KIT REPAIR FOR 1989 4-1/2 M&H - HYDRANT/PART 442929 (S06-B27)	442929	$ 129.38	1	$ 129.38	$ 140.00	1	$ 140.00
374	**585**	GASKET 2-1/2IN RUBBER - HYDRANT FOR PART # 636,637,638,639 (S06-B28)		$ 0.91	11	$ 10.01	$ 7.00	11	$ 77.00
375	**586**	CHAIN & HOOK FOR 5-1/4 A-D - HYDRANT CAP		$ 9.74	1	$ 9.74	$ 12.00	1	$ 12.00
376	**587**	CAP HOSE 2-1/2" HYD AMER-DARLING 84-21 (S06-B20)	84-21	$ 62.53	1	$ 62.53	$ 77.00	1	$ 77.00
377	**621**	WEATHER SHIELD / RUBBER AMER. DARLING 84-144 5 1/4" (B02-26)	84-144	$ 8.18	1	$ 8.18	$ 7.00	1	$ 7.00
378	**622**	FIBER COVER GASKET AMER. DARLING 84-13 5 1/4" (B02-27)	84-13	$ 6.54	4	$ 26.16	$ 7.00	4	$ 28.00
379	**640**	HOLD DOWN NUT / BRASS MUELLER 107 HYD. 4", 5", 6" H-118 / 158383 (S0(	158383	$ 40.67	1	$ 40.67	$ 95.00	1	$ 95.00
380	**641**	HOLD DOWN NUT 4 1/2 & 5 1/4CHATTANOOGA ST TRAFFIC (LEFT)175082 (S(	175082	$ 47.09	1	$ 47.09	$ 95.00	1	$ 95.00
381	**642**	HOSE NOZZLE 2 1/2 BRASS 4 1/2&5 1/4 CENTURION A18 STANDARD THREAD (S06-B42)	A18	$ 43.39	1	$ 43.39	$ 99.00	1	$ 99.00
382	**643**	PUMP NOZZLE 5 1/4 BRASS F/MUELLER 1988 HYD. A-14 (S06-B43)	A-14	$ 139.45	1	$ 139.45	$ 193.92	1	$ 193.92
383	**647**	ADAPTER HYD 2 1/2" X 3" SWIVEL (S06-B10)		$ 54.04	1	$ 54.04	$ 75.30	1	$ 75.30
384	**727**	HYDRANT EXTENSION 5 1/4" X 18" CLOW / MED *R1620666* (S10-D24)	R1620666	$ 273.38	1	$ 273.38	$ 321.00	1	$ 321.00
385	**740**	O-RING / SEAT 84-36-1 5 1/4" AMER. DARLING (B02-30)	84-36-1	$ 3.43	2	$ 6.86	$ 13.00	2	$ 26.00
386	**757**	VALVE / HYDRANT 84-41 5 1/4" AMER. DARLING (S06-C37)	84-41	$ 50.67	2	$ 101.34	$ 80.00	2	$ 160.00
387	**758**	O-RING / OPERATING NUT M-1/ T2400815 CLOW / MED. 5 1/4" (B02-32)	M-1/ T2400815	$ 3.11	11	$ 34.21	$ 3.70	11	$ 40.70
388	**764**	O-RING / THRUST NUT M-28 / T2400948 CLOW / MED. 5 1/4" (B02-33)	M-28 / T2400948	$ 3.11	22	$ 68.42	$ 3.70	22	$ 81.40
389	**765**	O-RING / STEM M-31 / T2401026 CLOW / MED. 5 1/4" (B02-34)	M-31 / T2401026	$ 3.11	6	$ 18.66	$ 3.70	6	$ 22.20
390	**768**	OPERATING NUT M-3 / 61CLM3 (RIGHT) CLOW / MED. 5 1/4" (S06-B09)	M-3 / 61CLM3	$ 140.64	1	$ 140.64	$ 165.00	1	$ 165.00
391	**824**	KIT SAFETY FLANGE REPAIR 4 1/2" MUELR195992 A300-00 PRE-1972 (S09-D01)	195992	$ 151.27	1	$ 151.27	$ 177.60	1	$ 177.60
392	**825**	KIT SAFETY FLANGE 5 1/4" MUELLER RTS A301 1972-LATER HRPI-301 (S(	HRPI-301	$ 103.03	2	$ 206.06	$ 120.96	2	$ 241.92
393	**826**	KIT SAFETY FLANGE REPAIR 4 1/2" 1977 CLOW-EDDY F.H. (S09-D03)		$ 114.07	1	$ 114.07	$ 133.92	1	$ 133.92
394	**827**	HYDRANT 6" EXTENSION KIT 4 1/2 CLOW MEDALLION R1620658 (S09-D05	R1620658	$ 185.34	1	$ 185.34	$ 217.60	1	$ 217.60
395	**828**	HYDRANT 6" EXTENSION KIT 4 1/2 CLOW/EDDY 1977 HYDRANT (S09-D06)		$ 185.34	1	$ 185.34	$ 217.60	1	$ 217.60
396	**829**	HYDRANT 12" EXTENSION KIT 4 1/2" CLOW/EDDY 1977 F.HYD (S09-D08)		$ 216.23	1	$ 216.23	$ 250.00	1	$ 250.00

SUPPLIERS FOR WATER AND SEWER PRODUCTS
BID TABULATION
E-BID #20120009

	A	B	E	G	H	I	J	K	L
1		**Company Name:**		**HD WATERWORKS**			**FERGUSON WATERWORKS**		
2	**Item**	**Item Description**	**Mfg. Part No.**	**Unit Price**	**Yrly Qty Est**	**Total**	**Unit Price**	**Yrly Qty Est**	**Total**
397	**830**	HYDRANT 6" EXTENSION KIT 4 1/2" MUELLER STD. TRAFFIC A337 (S09-D11	A337	$ 204.42	2	$ 408.84	$ 240.00	2	$ 480.00
398	**831**	HYDRANT 6" EXTENSION KIT 5 1/4" MUELLER SUPER FIRE HYD. HRPI-375 CENTURION IMPROVED (S09-D12)	HRPI-375	$ 224.87	1	$ 224.87	$ 264.00	1	$ 264.00
399	**832**	HYDRANT 12" EXTENSION KIT 4 1/2" 61MUA319010 / MUELLER SUPER HYD. A319 HRPI-374 CENTURION IMPROVED NEW STYLE (S09-D13)	A319 HRPI-374	$ 238.49	2	$ 476.98	$ 280.00	2	$ 560.00
400	**833**	HYDRANT 12" EXTENSION KIT 5 1/4" HRPI-375 A320-010 MUELLER SUPER FIRE HYDRANT CENTURION IMPROVED NEW STYLE (S09-D15)	HRPI-375 A320-010	$ 265.75	1	$ 265.75	$ 312.00	1	$ 312.00
401	**1231**	HYDRANT EXTENSION KIT 5 1/4" X 6" WATEROUS PACER WB AMER. DARLING (S09-D16)		$ 356.51	1	$ 356.51	$ 221.33	1	$ 221.33
402	**1264**	HYDRANT EXTENSION 4 1/2" X 12" (YD-19)		$ 216.23	1	$ 216.23	$ 199.27	1	$ 199.27
403	**1265**	HYDRANT GRADELOK 6" X 24" OFFSET SWIVEL JOINT (YD-08)		$ 352.52	1	$ 352.52	$ 383.21	1	$ 383.21
404	**1266**	HYDRANT EXTENSION 5 1/4" X 12" (YD-10)		$ 238.49	1	$ 238.49	$ 199.27	1	$ 199.27
405	**1267**	HYDRANT EXTENSION 4 1/2" X 18" STD TRAFFIC A337 (YD-07)	A337	$ 283.92	1	$ 283.92	$ 250.00	1	$ 250.00
406	**1269**	OFF-SET 6 X 18 IN MJ (YD-06)		$ 314.09	1	$ 314.09	$ 158.70	1	$ 158.70
407	**1270**	HYDRANT ADAPTER 6" X 13" SWIVEL SOLID MJ (YD-13)		$ 98.85	11	$ 1,087.35	$ 96.50	11	$ 1,061.50
408	**1271**	ELL-SWIVEL 90 6" X 13" MJ X HYD - D/I (YD-09)		$ 98.94	1	$ 98.94	$ 150.00	1	$ 150.00
409	**1650**	O-RING BONNET CLOW 5 1/4" HYD. 442 / M32 & M-47 (S06-B30)	M32 & M-47	$ 2.13	1	$ 2.13	$ 7.80	1	$ 7.80
410	**1651**	O-RING RUBBER CLOW 5 1/4" HYD. 444 / M-53 T2401040 (S06-B29)	T2401040	$ 2.13	1	$ 2.13	$ 7.80	1	$ 7.80
411	**2169**	KIT REPAIR 4 1/2" MAIN VALVE R1620654 / CLOW MED (S09-C08)	R1620654	$ 69.92	1	$ 69.92	$ 379.20	1	$ 379.20
412	**2170**	KIT REPAIR 5 1/4" MAIN VALVE 1620655 CLOW MED. (S09-C09)	R1620655	$ 69.92	66	$ 4,614.72	$ 379.20	66	$ 25,027.20
413	**2496**	KIT REPAIR 5 1/4" FIRE HYD. - AMER DARLING B84B HRPI-473-584 (S09-D(	B84B HRPI-473-584	$ 91.17	1	$ 91.17	$ 110.00	1	$ 110.00
414	**2683**	HYDRANT 12" EXTENSION KIT 5 1/4" CLOW MEDALLION HRPI-475 R1620665 (S09-D09)	R1620665	$ 240.95	4	$ 963.80	$ 282.88	4	$ 1,131.52
415	**2692**	HYDRANT 12" EXTENSION KIT 4 1/2" MUELLER SUPER A337 / 61MUA337010 STANDARD TRAFFIC IMPROVED NEW STYLE (S09-D14)		$ 305.31	5	$ 1,526.55	$ 250.00	5	$ 1,250.00
416	**3269**	FIRE HYD 4 1/2" MUELLER W 42 B - 604426M3A421	604426M3A421	$ 1,426.42	1	$ 1,426.42	$ 1,419.90	1	$ 1,419.90
417	**3465**	HYDRANT 12" EXTENSION KIT 4-1/2 MK73 AM DARLING 5-1/2 B84-B (S09-I	B84-B	$ 177.17	1	$ 177.17	$ 201.29	1	$ 201.29
418	**3521**	PIN COTTER SS 3/32" X 1" T0400980 CLOW HYD.	T0400980	$ 0.66	1	$ 0.66	$ 0.90	1	$ 0.90
419	**3522**	PIN SS 4 1/2" & 5 1/4" CLOW HYD. T0400891 (B02-11)	T0400891	$ 2.67	11	$ 29.37	$ 6.50	11	$ 71.50
420	**3523**	COUPLING MEDALN 4 1/2" & 5 1/4" (B02-13) M2202349	M2202349	$ 32.56	1	$ 32.56	$ 38.40	1	$ 38.40
421	**3692**	KIT REPAIR SAFETY FLANGE 5 1/4" CLOW MED. R1620653 (S09-C10)	R1620653	$ 103.03	2	$ 206.06	$ 120.96	2	$ 241.92
422	**3801**	MAIN VALVE RING 4 1/2" RUBBER MUELLER H-88 IMPROVED / 195800 (B0:	195800	$ 40.88	2	$ 81.76	$ 48.00	2	$ 96.00

SUPPLIERS FOR WATER AND SEWER PRODUCTS
BID TABULATION
E-BID #20120009

	A	B	E	G	H	I	J	K	L
1		**Company Name:**		**HD WATERWORKS**			**FERGUSON WATERWORKS**		
2	**Item**	**Item Description**	**Mfg. Part No.**	**Unit Price**	**Yrly Qty Est**	**Total**	**Unit Price**	**Yrly Qty Est**	**Total**
423	**3921**	DRAIN VALVE FACING MUELLER H-81 IMPROVED 4 1/4", 4 1/2", 5 1/4" 192447 (S06-B46)	192447	$ 4.54	1	$ 4.54	$ 250.00	1	$ 250.00
424	**3922**	MAIN VALVE 4 1/4" RUBBER H-88 IMPROVED 190435 MUELLER HYD. (S06-	190435	$ 63.08	1	$ 63.08	$ 43.00	1	$ 43.00
425	**5082**	GASKET 3 1/8" OD RUBBER HYD. HOSE CAP T0600547 (S06-B40)	T0600547	$ 1.07	49	$ 52.43	$ 3.26	49	$ 159.74
426	**5083**	GASKET 5 3/4" OD RUBBER HYD. STMR CAP T0600548 (S06-B41)	T0600548	$ 3.20	21	$ 67.20	$ 5.94	21	$ 124.74
427	**5084**	STEM UPPER 5 1/4" HYDRANT - F/1987 MUELLER 42IN		$ 106.45	1	$ 106.45	$ 110.93	1	$ 110.93
428	**5085**	STEM LOWER 5 1/4" HYDRANT - F/1987 MUELLER 42IN		$ 78.34	1	$ 78.34	$ 95.76	1	$ 95.76
429	**5128**	FIRE HYD. 5 1/4" CLOW 54" BURY 605546M3 CLMED (YD-05)	605546M3	$ 1,369.64	1	$ 1,369.64	$ 1,547.30	1	$ 1,547.30
430	**5167**	FIRE HYD 5 1/4" CLOW 48" BURY 605486M3 CLMED (YD-87)	605486M3	$ 1,320.80	6	$ 7,924.80	$ 1,512.20	6	$ 9,073.20
431	**5552**	FIRE HYD. 5 1/4" CLOW RED 30" BURY		$ 1,249.25	1	$ 1,249.25	$ 1,442.00	1	$ 1,442.00
432	**5684**	HYDRANT EXTENSION KIT 12" KENNEDY HYD - MODEL K81A 5 1/4"	K81A	$ 211.60	1	$ 211.60	$ 263.04	1	$ 263.04
433	**5779**	HYDRANT EXTENSION KIT 12" KENNEDY 81A PART 61KEK81A EXT125	61KEK81A	$ 224.05	1	$ 224.05	$ 263.04	1	$ 263.04
434	**5801**	HYDRANT EXTENSION 12" 4 1/2" X 12" MUELLER A322 NON-TRAFFIC	A322	$ 265.66	1	$ 265.66	$ 280.00	1	$ 280.00
435	**5817**	CHAIN (ONLY) FOR FIRE HYDRANT CAPS - M-44 T1600709 (S06-B22)	T1600709	$ 2.91	64	$ 186.24	$ 33.50	64	$ 2,144.00
436	**5831**	HYDRANT 6" EXTENSION 5 1/4" VO R1620664 61CLR1620664 CLOW MEDALLION HRPI-475 (S09-D10)	R1620664	$ 203.88	1	$ 203.88	$ 239.36	1	$ 239.36
437	**5915**	FIRE HYD. 5 1/4" CLOW 60" BURY		$ 1,590.76	1	$ 1,590.76	$ 1,582.40	1	$ 1,582.40
438	**5990**	O-RING STEM 4 1/2" & 5 1/4" CENTURION A12 / 194514 (B02-02)	194514	$ 4.74	31	$ 146.94	$ 3.65	31	$ 113.15
439	**6052**	FIRE HYD. 42" 5-1/4 CLOW 2546-5B (YD-03)	2546-5B	$ 1,461.29	4	$ 5,845.16	$ 1,477.10	4	$ 5,908.40
440	**6056**	OPERATING NUT 4 1/2" & 5 1/4" CENTURION 158477 (S06-B17)	158477	$ 120.18	1	$ 120.18	$ 65.00	1	$ 65.00
441	**6057**	WEATHER CAP 4 1/2 & 5 1/4 CENTURION 142818 LEFT (S06-B16)	142818	$ 18.39	1	$ 18.39	$ 26.40	1	$ 26.40
442	**6058**	HOLD DOWN NUT / CENTURION 146501 / LEFT (S06-B15)	146501	$ 38.18	1	$ 38.18	$ 54.59	1	$ 54.59
443	**6062**	WEATHER SHIELD / RUBBER AMER. DARLING 84-144 6" (B02-19)	84-144	$ 6.50	2	$ 13.00	$ 8.00	2	$ 16.00
444	**6063**	FIBER COVER GASKET AMER. DARLING 84-13 6" (B02-20)	84-13	$ 6.54	1	$ 6.54	$ 7.00	1	$ 7.00
445	**6087**	OPERATING NUT THRUST WASHER T-020-0669 (B02-17)	T-020-0669	$ 3.60	11	$ 39.60	$ 4.30	11	$ 47.30
446	**6089**	O-RING THRUST NUT M-28 T-240-0948 (B02-18)	T-240-0948	$ 3.11	17	$ 52.87	$ 3.70	17	$ 62.90
447	**6090**	O-RINGS STEM M-31 T-240-1026 (B02-23)	T-240-1026	$ 3.11	1	$ 3.11	$ 3.70	1	$ 3.70
448		**5. SUBTOTAL**				**$ 37,664.83**			**$ 63,134.62**
449		**6. FLO-CONTROL HOT TAP SADDLES ONLY**							
450	**741**	SADDLE HOT TAP 2x1-1/2INx2IN - 3220 FLO CONTROL * 5/BX* (S05-F01)	3220 FLO CONTROL	$ 47.97	61	$ 2,926.17	$ 52.15	61	$ 3,181.15
451	**742**	SADDLE HOT TAP 2-1/2x1-1/2IN - 3225 FLO CONTROL *5/BX* (S05-F02)	3225 FLO CONTROL	$ 49.57	128	$ 6,344.96	$ 53.89	128	$ 6,897.92
452	**743**	SADDLE HOT TAP 3 x 1-1/2IN - 3230 FLO CONTROL *5 PER BX* (S05-F03)	3230 FLO CONTROL	$ 53.00	59	$ 3,127.00	$ 57.62	59	$ 3,399.58
453	**744**	SADDLE HOT TAP 4x1-1/2IN - 3240 FLO CONTROL *5 PER BX* (S05-F04)	3240 FLO CONTROL	$ 57.83	21	$ 1,214.43	$ 62.86	21	$ 1,320.06

SUPPLIERS FOR WATER AND SEWER PRODUCTS
BID TABULATION
E-BID #20120009

	A	B	E	G	H	I	J	K	L
1		Company Name:		HD WATERWORKS			FERGUSON WATERWORKS		
2	Item	Item Description	Mfg. Part No.	Unit Price	Yrly Qty Est	Total	Unit Price	Yrly Qty Est	Total
454	745	SADDLE HOT TAP 6x1-1/2IN - 3260 FLO CONTROL *5 PER BX* (S05-F05)	3260 FLO CONTROL	$ 78.19	11	$ 860.09	$ 85.00	11	$ 935.00
455	2213	SADDLE HOT TAP 8x1-1/2-2 - FLO CTL-3280 (S0F-F08)	3280	$ 103.03	1	$ 103.03	$ 90.72	1	$ 90.72
456	3175	SADDLE HOT TAP 6x1-1/2-2 C-900 - 9260 FLO CONTROL (S05-F07)	9260	$ 78.19	5	$ 390.95	$ 85.53	5	$ 427.65
457	3176	SADDLE HOT TAP 8 x 1-1/2 C-900 - FLO CONTROL #9280	9280	$ 105.19	1	$ 105.19	$ 89.34	1	$ 89.34
458	5027	SADDLE HOT TAP 4 X 1 1/2IN-2 F/C-900 PIPE P/N9240 (S05-F06)	9240	$ 72.55	1	$ 72.55	$ 65.73	1	$ 65.73
459	5888	SADDLE WEDGE 225 - 225 WEDGE (S05-E13)	225 WEDGE	$ 4.82	1	$ 4.82	$ 50.00	1	$ 50.00
460	5889	SADDLE WEDGE 380 - 380 WEDGE (S05-E14)	380 WEDGE	$ 7.33	1	$ 7.33	$ 50.00	1	$ 50.00
461	5890	SADDLE WEDGE 480 - 480 WEDGE (S05-E15)	480 WEDGE	$ 4.38	1	$ 4.38	$ 50.00	1	$ 50.00
462		**6. SUBTOTAL**				**$ 15,160.90**			**$ 16,557.15**
463		**7. GENERAL ITEMS**							
464	61	SPRING FOR CLOW 3" CHECK VALVE T-120-0120 (B01-D13)	T-120-0120	$ 47.09	4	$ 188.36	$ 125.00	4	$ 500.00
465	76	SPRING FOR CLOW 4" CHECK VALVE T-120-0086 (B01-D14)	T-120-0086	$ 47.09	12	$ 565.08	$ 125.00	12	$ 1,500.00
466	77	SPRING FOR CLOW 6" CHECK VALVE T-120-0038 (B01-D15)	T-120-0038	$ 47.09	2	$ 94.18	$ 135.00	2	$ 270.00
467	326	TEFLON 8 OZ PACKING & - MOLDING COMPOUND (B08-A01)		$ 8.56	1	$ 8.56	$ 10.00	1	$ 10.00
468	327	LUBRICANT PIPE JOINT 2 LB - 29APLQ (B13-E02)	29APLQ	$ 3.12	1	$ 3.12	$ 3.30	1	$ 3.30
469	360	CEMENT PORTLAND TYPE II SKU# 169-846 (S01-D02)	SKU# 169-846	$ 8.72	2	$ 17.44	$ 9.00	2	$ 18.00
470	549	METER LOCKSEAL HEAD - 93280148 ALUM. SEAL (S15-A03)	93280148	$ 1.07	3311	$ 3,542.77	$ 3.00	3311	$ 9,933.00
471	550	METER LOCK STUD X-LONG 1-1/2 - 93210142 REGULAR DIA (S15-A04)	93210142	$ 1.11	3171	$ 3,519.81	$ 3.00	3171	$ 9,513.00
472	551	LOCK 3/4IN JONES - J-288 (S15-A05)	J-288	$ 23.43	1	$ 23.43	$ 55.00	1	$ 55.00
473	552	LOCK 3/4IN FOR ANGLE VALVE (S15-A06)		$ 18.90	1	$ 18.90	$ 40.00	1	$ 40.00
474	553	LOCK 1IN JONES		$ 18.90	1	$ 18.90	$ 0.20	1	$ 0.20
475	558	GASKET WASHER 3/4 x 1/16IN - RUBBER (S06-B01)		$ 0.06	711	$ 42.66	$ 0.30	711	$ 213.30
476	559	GASKET WASHER 3/4 x 1/8IN - RUBBER (S06-B02)		$ 0.07	4111	$ 287.77	$ 0.20	4111	$ 822.20
477	560	WASHER-PAPER/FIBER 3/4 X 1/16 - PAPER (S06-B03)		$ 0.09	1	$ 0.09	$ 0.20	1	$ 0.20
478	562	GASKET WASHER 1 x 1/16IN - RUBBER (S06-B05)		$ 0.09	1	$ 0.09	$ 0.20	1	$ 0.20
479	563	GASKET WASHER 1 x 1/16IN - PAPER (S06-B06)		$ 0.07	1	$ 0.07	$ 0.20	1	$ 0.20
480	564	GASKET WASHER 1 x 1/8IN - RUBBER (S06-B07)		$ 0.08	211	$ 16.88	$ 0.20	211	$ 42.20
481	812	CAP 4IN DAY PVC (S09-A09)		$ 1.77	7	$ 12.39	$ 9.00	7	$ 63.00
482	813	CAP 6IN DAY PVC SDR26 - TEMP PIPE PLUG #2706 (S09-A10)	2706	$ 2.63	4	$ 10.52	$ 10.00	4	$ 40.00
483	814	PLUG TEST PNEUMATIC 4IN - 262-048 (S09-A11)	262-048	$ 103.06	1	$ 103.06	$ 121.00	1	$ 121.00
484	815	PLUG TEST PNEUMATIC 6IN - 262-064 (S09-A12)	262-064	$ 121.80	1	$ 121.80	$ 143.03	1	$ 143.03
485	816	PLUG TEST PNEUMATIC 8IN - 262-080 (S09-A13)	262-080	$ 153.32	1	$ 153.32	$ 180.07	1	$ 180.07
486	817	PLUG TEST PNEUMATIC 10IN - 262-110 (S09-A14)	262-110	$ 201.87	1	$ 201.87	$ 236.90	1	$ 236.90

SUPPLIERS FOR WATER AND SEWER PRODUCTS
BID TABULATION
E-BID #20120009

	A	B	E	G	H	I	J	K	L
1		**Company Name:**		**HD WATERWORKS**			**FERGUSON WATERWORKS**		
2	Item	Item Description	Mfg. Part No.	Unit Price	Yrly Qty Est	Total	Unit Price	Yrly Qty Est	Total
487	875	GASKET RUBBER 12.75 - F/STEEL COUPLING (S10-A31)		$ 13.47	1	$ 13.47	$ 30.00	1	$ 30.00
488	876	GASKET RUBBER 14.21-14.40 - F/STEEL COUPLING (S10-A30)		$ 13.47	1	$ 13.47	$ 30.00	1	$ 30.00
489	2010	VALVE BOX SEWER WITH COVER - 75RC7635 (S07-E07)	75RC7635	$ 149.35	1	$ 149.35	$ 149.48	1	$ 149.48
490	2152	PRECO PLUG 5/GAL BUCKET - 96THOROC (S13-E04)	96THOROC	$ 26.12	6	$ 156.72	$ 26.10	6	$ 156.60
491	2201	GASKET 12 X 1/8 IN RED RUBBER - 12 HOLE F/F FG 12 (S11-B14)		$ 4.71	2	$ 9.42	$ 7.50	2	$ 15.00
492	2680	NUT OPERATING 2 SQ.IN. FOR 4IN - CLOW MJ GATE VALVE (S09-A04)		$ 14.95	1	$ 14.95	$ 65.00	1	$ 65.00
493	3807	VALVE BOX WATER WITH COVER P/N=7630-125 (S07-E08)	7630-125	$ 138.86	2	$ 277.72	$ 149.84	2	$ 299.68
494	5473	LOCK SEAL SHANK - LONG - PART #65FMLSSL	65FMLSSL	$ 3.00	1	$ 3.00	$ 20.00	1	$ 20.00
495	5811	CUTTER RATCHET FOR RS-1 - REED 94051 (B02-82)	94051	$ 29.20	1	$ 29.20	$ 25.00	1	$ 25.00
496	5812	CUTTER SPRING FOR RS1 - 40142 REED (B02-80)	40142	$ 10.30	1	$ 10.30	$ 25.00	1	$ 25.00
497	5813	CUTTER NUT FOR RS-1 - REED 30088 (B02-81)	30088	$ 0.27	1	$ 0.27	$ 10.00	1	$ 10.00
498	5814	CUTTER SPRING FOR RS2 - 40164 REED (B02-79)	40164	$ 13.74	1	$ 13.74	$ 31.10	1	$ 31.10
499	5982	CONCRETE MIX 80 LB BAG (SAKRETE)		$ 4.10	1	$ 4.10	$ 4.98	1	$ 4.98
500	6018	GREASE HYDRANT PETRO BLEND FG-2 (S09-B10)	FG-2	$ 15.12	242	$ 3,659.04	$ 23.00	242	$ 5,566.00
501	6068	MARKER WATER BALL 3M 1403XR *30 PER BX* (S09-C03)	1403XR	$ 7.85	571	$ 4,482.35	$ 10.00	571	$ 5,710.00
502	6069	MARKER SEWER BALL 3M 1404XR *30 PER BX* (S09-C07)	1404XR	$ 7.85	726	$ 5,699.10	$ 10.00	726	$ 7,260.00
503	6084	GASKET 16" X 1/8" RED RUBBER (S11-B13)		$ 9.36	1	$ 9.36	$ 11.30	1	$ 11.30
504		**7. SUBTOTAL**				**$ 23,496.63**			**$ 43,113.94**
505		**8. LIFT STATION PARTS / US FOUNDRY OR APPROVED EQUAL**							
506	808	RAIN GUARD SEWER MANHOLE W/STR - 22 1/2IN OD W/STRAP (S09-A01)		$ 31.80	1	$ 31.80	$ 35.00	1	$ 35.00
507	1262	RISER MANHOLE 23 1/2 X 1 1/2 - FOR 1 1/4 IN LID (YD-97)		$ 112.43	1	$ 112.43	$ 280.90	1	$ 280.90
508	1274	MANHOLE RING AND LID - USF-465B *DON'T RE-ORDER* (YD-101)		$ 252.12	3	$ 756.36	$ 279.35	3	$ 838.05
509	1275	MANHOLE RING & LID 24" * CDPA60EHSSE * SANITARY SEWER (YD-102)	CDPA60EHSSE	$ 283.92	1	$ 283.92	$ 185.00	1	$ 185.00
510	3625	RISER MANHOLE 22-3/4ID x 1-1/2 - FOR 2IN LID (YD-96)		$ 201.53	1	$ 201.53	$ 280.90	1	$ 280.90
511	3626	RISER MANHOLE 22-3/4ID x 2-1/2 - FOR 2IN LID		$ 267.36	1	$ 267.36	$ 315.00	1	$ 315.00
512	3731	RISER MANHOLE 24 X 1 1/2 IN - FOR 1 1/4 IN LID (YD-98)		$ 116.98	1	$ 116.98	$ 280.90	1	$ 280.90
513	5079	RISER MANHOLE 22-3/4ID x 1IN FOR 2IN #465 LID (YD-94)		$ 112.43	2	$ 224.86	$ 207.38	2	$ 414.76
514	5742	RISER MANHOLE 22-3/4ID x 2IN - FOR 2IN LID (YD-95)		$ 140.82	1	$ 140.82	$ 295.00	1	$ 295.00
515		**8. SUBTOTAL**				**$ 2,136.06**			**$ 2,925.51**
516		**9. METER BOXES & LIDS**							
517	354	LID ONLY SINGLE PLASTIC W/CI/R - 1419H	1419H	$ 11.72	1	$ 11.72	$ 11.80	1	$ 11.80
518	355	LID ONLY DOUBLE PLASTIC W/CI R - 1220H	1220H	$ 26.26	1	$ 26.26	$ 20.10	1	$ 20.10

SUPPLIERS FOR WATER AND SEWER PRODUCTS
BID TABULATION
E-BID #20120009

	A	B	E	G	H	I	J	K	L
1		**Company Name:**		**HD WATERWORKS**			**FERGUSON WATERWORKS**		
2	**Item**	**Item Description**	**Mfg. Part No.**	**Unit Price**	**Yrly Qty Est**	**Total**	**Unit Price**	**Yrly Qty Est**	**Total**
519	**356**	LID ONLY SGL/CI W/CI READER - 36T (YD-78)	36T	$ 54.51	3	$ 163.53	$ 62.20	3	$ 186.60
520	**357**	LID ONLY /DUAL-H C.I. COVER (YD-82)		$ 63.60	3	$ 190.80	$ 32.93	3	$ 98.79
521	**420**	METER BOX JUMBO PLASTIC - W/CI READER LID (YD-02)		$ 89.72	1	$ 89.72	$ 48.80	1	$ 48.80
522	**1276**	METER BX DBL CONCRETE / NO LID (YD-86)		$ 28.39	13	$ 369.07	$ 30.49	13	$ 396.37
523	**1278**	METER BX JUMBO CONCRETE (YD-84)		$ 85.18	1	$ 85.18	$ 56.10	1	$ 56.10
524	**1280**	LID ONLY JUMBO CONCRETE - W / CONCRETE READER (YD-77)		$ 72.68	3	$ 218.04	$ 78.05	3	$ 234.15
525	**1281**	METER BOX SINGLE W/READ LID CONCRETE (YD-85)		$ 47.70	5	$ 238.50	$ 25.61	5	$ 128.05
526	**1282**	LID ONLY DOUBLE CONCRETE - DUAL H/CI W/READER (YD-81)	DUAL H	$ 50.62	27	$ 1,366.74	$ 32.93	27	$ 889.11
527	**1283**	LID SINGLE CONCRETE W/CI READ - 36H (YD-83)	36H	$ 24.42	4	$ 97.68	$ 25.61	4	$ 102.44
528	**3189**	LID SINGLE CONC. SOLID - 36H (YD-79)	36H	$ 23.85	1	$ 23.85	$ 17.07	1	$ 17.07
529	**5959**	LID, METER BOX WC00-1118-2C (YD-80)	WC00-1118-2C	$ 27.20	1	$ 27.20	$ 28.05	1	$ 28.05
530	**6048**	LID ONLY DOUBLE/SOLID PLASTIC/OVERLAPPING 117CW (YD-15)	117CW	$ 10.86	1576	$ 17,115.36	$ 12.01	1576	$ 18,927.76
531	**6049**	LID ONLY SINGLE / SOLID OVERLAPPING / PLASTIC 113CW (YD-01)	113CW	$ 5.49	611	$ 3,354.39	$ 12.17	611	$ 7,435.87
532	**6050**	METER BOX COMPLETE/DOUBLE / SOLID OVERLAPPING LID 117B12CW-3 (	117B12CW-3	$ 28.63	1624	$ 46,495.12	$ 31.67	1624	$ 51,432.08
533	**6051**	METER BOX COMPLETE/SINGLE / SOLID OVERLAPPING LID 113BCW (YD-17	113BCW	$ 13.88	546	$ 7,578.48	$ 15.35	546	$ 8,381.10
534		**9. SUBTOTAL**				**$ 77,451.64**			**$ 88,394.24**
535		**10. METERS, WATER & ALL PARTS**							
536	**3**	BACKFLOW 3/4IN PREV. RPZ WILKINS 975 XL (S10-B01)	975XL	$ 127.96	32	$ 4,094.72	$ 122.50	32	$ 3,920.00
537	**646**	BACKFLOW 1IN PREVENTER RPZ WILKINS 975XL BRASS (S10-B02)	975XL	$ 134.50	19	$ 2,555.50	$ 132.50	19	$ 2,517.50
538	**650**	BACKFLOW 2IN PREVENTER RPZ - WILKINS 975XL BRASS (S10-B04)	975XL	$ 298.97	13	$ 3,886.61	$ 297.50	13	$ 3,867.50
539	**5408**	LOCK SEAL KEY 93280139 - 65FMLSK (PC-B03)	65FMLSK	$ 3.86	68	$ 262.48	$ 20.00	68	$ 1,360.00
540	**5608**	BACKFLOW 1-1/2IN RPZ PREVENTER - WILKINS 975XL BRASS (S10-B03)	975XL	$ 252.18	3	$ 756.54	$ 233.80	3	$ 701.40
541		**10. SUBTOTAL**				**$ 11,555.85**			**$ 12,366.40**
542		**11. PIPE, PVC 40, C900**							
543	**1093**	PIPE 1/2IN SCH40 PVC - 20FT LENGTHS (PR1-B01)		$ 0.24	481	$ 115.44	$ 0.23	481	$ 110.63
544	**1094**	PIPE 3/4IN SCH40 PVC - 20FT SILVER LINE (PR5-D01)		$ 0.26	22511	$ 5,852.86	$ 0.35	22511	$ 7,878.85
545	**1095**	PIPE 1IN SCH40 PVC - 20FT SILVER LINE (PR2-E01)		$ 0.43	2211	$ 950.73	$ 0.50	2211	$ 1,105.50
546	**1096**	PIPE 3IN SCH40 PVC SILVER LINE (PR4-D01)		$ 1.39	6141	$ 8,535.99	$ 1.75	6141	$ 10,746.75
547	**1097**	PIPE 2IN SCH40 PVC - 20FT SILVER LINE (PR7-D01)		$ 0.72	811	$ 583.92	$ 0.85	811	$ 689.35
548	**1098**	PIPE 1-1/4IN SCH40 PVC SILVER LINE (PR2-D01)		$ 0.49	3261	$ 1,597.89	$ 0.70	3261	$ 2,282.70
549	**1099**	PIPE 2-1/2IN SCH40 PVC - 20FT SILVER LINE (PR7-C01)		$ 1.34	1	$ 1.34	$ 1.75	1	$ 1.75
550	**1100**	PIPE 1-1/2IN SCH40 PVC - 20FT SILVER LINE (PR5-C01)		$ 0.51	22581	$ 11,516.31	$ 0.65	22581	$ 14,677.65
551	**1101**	PIPE 4IN SCH40 PVC SILVER LINE (PR4-E01)		$ 1.94	1541	$ 2,989.54	$ 2.40	1541	$ 3,698.40

SUPPLIERS FOR WATER AND SEWER PRODUCTS
BID TABULATION
E-BID #20120009

	A	B	E	G	H	I	J	K	L
1		Company Name:		HD WATERWORKS			FERGUSON WATERWORKS		
2	Item	Item Description	Mfg. Part No.	Unit Price	Yrly Qty Est	Total	Unit Price	Yrly Qty Est	Total
552	1102	POLY TUBING 1-1/2IN 200 PSI - 100 FT ROLL (PR7-I01)		$ 0.68	1	$ 0.68	$ 0.75	1	$ 0.75
553	1103	POLY TUBING 2IN 200 PSI - 100FT ROLLS (PR7-H01)		$ 1.27	175	$ 222.25	$ 1.36	175	$ 238.00
554	1107	POLY TUBING 1IN 200 PSI - 300FT ROLL DRISCO (YD-105)		$ 0.34	12311	$ 4,185.74	$ 0.35	12311	$ 4,308.85
555	1183	PIPE 8IN X 14FT SEWER SDR26 (PR6-J01)	SDR-26	$ 6.20	9	$ 55.80	$ 5.69	9	$ 51.21
556	1184	PIPE 8IN DR 18-C-900 BLUE PVC (PR6-E01)	DR 18-C-900	$ 9.94	33	$ 328.02	$ 9.11	33	$ 300.63
557	1189	PIPE 4IN DR18 C-900 BLUE PVC (PR6-C01)	DR18 C-900	$ 2.87	51	$ 146.37	$ 2.64	51	$ 134.64
558	1190	PIPE 6IN DR-18 C900 BLUE PVC (PR6-D01)	DR-18 C900	$ 5.75	122	$ 701.50	$ 5.27	122	$ 642.94
559	1191	PIPE 4IN X 14FT SEWER SDR26 (PR6-H01)	SDR-26	$ 1.58	9	$ 14.22	$ 1.45	9	$ 13.05
560	1192	PIPE 6IN X 14FT SEWER SDR26 (PR6-I01)	SDR-26	$ 3.44	42	$ 144.48	$ 3.16	42	$ 132.72
561	1402	PIPE 6IN SCH40 PVC (PR7-B01)		$ 4.92	58	$ 285.36	$ 6.10	58	$ 353.80
562	1407	PIPE 8IN SCH40 PVC - 0508040 (PR7-A01)		$ 5.55	1	$ 5.55	$ 6.50	1	$ 6.50
563	2095	PIPE 18IN DR18 BLUE C905 CL235 (YDP-15)	DR18	$ 43.68	1	$ 43.68	$ 43.58	1	$ 43.58
564	2096	PIPE 18IN DR18 GREEN C905 CL235	DR18	$ 45.97	1	$ 45.97	$ 43.58	1	$ 43.58
565	2097	PIPE 24IN DR18 BLUE C905 CL235 (YDP-17)	DR18	$ 77.48	1	$ 77.48	$ 77.50	1	$ 77.50
566	2098	PIPE 24IN DR18 [MARKED W/GREEN (YDP-14)	DR18	$ 81.54	1	$ 81.54	$ 77.50	1	$ 77.50
567	2111	PIPE 12IN DR18 BLUE C900 CL150 - 021218B (PR6-F01)	DR18	$ 21.07	74	$ 1,559.18	$ 19.32	74	$ 1,429.68
568	2112	PIPE 10IN DR18 BLUE C900 CL150 (PR7-F01)	DR18	$ 14.92	1	$ 14.92	$ 13.69	1	$ 13.69
569	2113	PIPE 16IN DR18 BLUE C905 CL235 (YDP-11)	DR18	$ 34.65	1	$ 34.65	$ 34.50	1	$ 34.50
570	2114	PIPE 20IN DR18 BLUE C905 CL235 (YDP-16)	DR18	$ 53.89	1	$ 53.89	$ 53.83	1	$ 53.83
571	2115	PIPE 10IN DR18 GREEN C900 CL150 (YDP-09)	DR18	$ 15.71	1	$ 15.71	$ 13.69	1	$ 13.69
572	2116	PIPE 12IN DR18 GREEN C900 CL150	DR18	$ 22.17	1	$ 22.17	$ 19.32	1	$ 19.32
573	2117	PIPE 16IN DR18 GREEN C905 CL235 (YDP-12)	DR18	$ 36.47	1	$ 36.47	$ 34.50	1	$ 34.50
574	2118	PIPE 20IN DR18 GREEN C905 CL23 (YDP-10)	DR18	$ 56.72	5	$ 283.60	$ 53.83	5	$ 269.15
575	5770	POLY TUBING 3/4IN 200 PSI - 100FT ROLL (S04-E04)		$ 0.19	6	$ 1.14	$ 0.25	6	$ 1.50
576	5895	PIPE 20IN DR25 GREEN C905 (YDP-13)	DR25	$ 41.28	1	$ 41.28	$ 53.83	1	$ 53.83
577		**11. SUBTOTAL**				**$ 40,545.67**	$ -		**$ 49,540.52**
578		**12. PLUMBING PARTS / STREAMLINE-MUELLER OR APPROVED EQUAL**							
579	777	TEE 3/4 X 3/4 X 3/4 COPPER WB04031 (S12-D48)	WB04031	$ 2.21	15	$ 33.15	$ 2.10	15	$ 31.50
580	2824	ESCUTCHEON PLATE-WHITE PVC 3/4" HOLE/PVC PIPE *921-3W* (S12-D36)	921-3W	$ 0.17	25	$ 4.25	$ 0.25	25	$ 6.25
581	5263	ADAPTER 3/4IN MPT X COPPER - W1146 (S12-D38)	W1146	$ 1.89	118	$ 223.02	$ 1.80	118	$ 212.40
582	5264	ADAPTER REDUCER 3/4 MPT X 1/2IN C - W1130 COPPER (S12-D37)	W1130	$ 3.28	4	$ 13.12	$ 1.40	4	$ 5.60
583	5265	ELL 90 DEG 3/4IN COPPER CxC - C9F - W1634 (S12-D39)	W1634	$ 1.20	61	$ 73.20	$ 1.10	61	$ 67.10
584	5267	FLUX WATER SOLUBLE 16OZ PASTE - 30133 Oatey (S12-D46)	30133 Oatey	$ 7.63	12	$ 91.56	$ 10.90	12	$ 130.80

SUPPLIERS FOR WATER AND SEWER PRODUCTS
BID TABULATION
E-BID #20120009

	A	B	E	G	H	I	J	K	L
1		**Company Name:**		**HD WATERWORKS**			**FERGUSON WATERWORKS**		
2	**Item**	**Item Description**	**Mfg. Part No.**	**Unit Price**	**Yrly Qty Est**	**Total**	**Unit Price**	**Yrly Qty Est**	**Total**
585	**5321**	ESCUTCHEON PLATE 3/4" CHROME - E01075 25/BX (S12-D44)	E01075	$ 0.37	1	$ 0.37	$ 0.70	1	$ 0.70
586	**5322**	ESCUTCHEON PLATE - WHITE PVC 3/4in HOLE / COPPER * 920-3W * (S12-D43)	920-3W	$ 0.85	11	$ 9.35	$ 0.20	11	$ 2.20
587	**5323**	ADAPTER 3/4IN MPT BRASS x FS - CPVC 6033 (S12-D45)	CPVC 6033	$ 9.28	3	$ 27.84	$ 10.00	3	$ 30.00
588	**5362**	CAP 3/4IN COPPER - W7009 (S12-D42)	W7009	$ 0.73	2	$ 1.46	$ 0.70	2	$ 1.40
589	**5750**	COUPLING 3/4IN COPPER CxC - CCF- WBO1034 (S12-D40)	WBO1034	$ 0.82	27	$ 22.14	$ 0.84	27	$ 22.68
590	**5751**	ELL 45 DEG 3/4IN COPPER CxC - C4F- W3034 (S12-D41)	W3034	$ 1.73	1	$ 1.73	$ 1.60	1	$ 1.60
591	**5752**	ADAPTER 3/4IN COPPER CxF - CFAF- W1246 (S12-C33)	W1246	$ 2.45	129	$ 316.05	$ 2.30	129	$ 296.70
592	**5753**	REDUCER 1x3/4IN COPPER FTGxC - BUSHING -CRCGF- W1337 (S12-C32)	W1337	$ 1.44	1	$ 1.44	$ 2.50	1	$ 2.50
593	**5754**	UNION 3/4IN COPPER CxC - CUF- W8004 (S12-C35)	W8004	$ 7.37	1	$ 7.37	$ 6.60	1	$ 6.60
594	**5755**	PIPE 3/4IN COPPER - K HARD F20(PR1-D03)	K HARD	$ 4.03	141	$ 568.23	$ 4.10	141	$ 578.10
595	**5756**	COUPLING 1IN COPPER CxC - CCG- W1047 (S12-C36)	W1047	$ 1.64	1	$ 1.64	$ 1.60	1	$ 1.60
596	**5757**	ELL 90 DEG 1IN COPPER CxC - C9G- W1647 10/BX (S12-C38)	W1647	$ 2.96	11	$ 32.56	$ 2.80	11	$ 30.80
597	**5758**	ELL 45 DEG 1IN COPPER CxC - C4G- W3044 (S12-C37)	W3044	$ 4.34	1	$ 4.34	$ 4.00	1	$ 4.00
598	**5759**	ADAPTER 1IN COPPER CxM - CMAG- W1163 (S12-C39)	W1163	$ 4.88	91	$ 444.08	$ 4.50	91	$ 409.50
599	**5760**	ADAPTER 1IN COPPER CxF - CFAG- W1263 (S12-C40)	W1263	$ 5.67	21	$ 119.07	$ 5.20	21	$ 109.20
600	**5761**	UNION 1IN COPPER CxC - CUG- W8005 10/BX (S12-C41)	W8005	$ 12.40	4	$ 49.60	$ 11.30	4	$ 45.20
601	**5762**	PIPE 1IN COPPER - K HARD G20 (PR1-D02)	K HARD	$ 5.37	81	$ 434.97	$ 5.46	81	$ 442.26
602	**5764**	ELL 90 DEG 3/4IN COPPER FTGxC - STREET W1654(S12-C34)	W1654	$ 1.74	95	$ 165.30	$ 1.70	95	$ 161.50
603	**5765**	ELL 90 DEG 1IN COPPER FTGxC - STREET- CS9G- W2344 (S12-C42)	W2344	$ 4.51	28	$ 126.28	$ 4.30	28	$ 120.40
604	**5836**	PIPE 2IN COPPER K-HARD K20 (PR1-D01)	K-HARD	$ 13.16	21	$ 276.36	$ 13.41	21	$ 281.61
605	**5837**	COUPLING 2IN CxC COPPER - CCK- W1072 (S12-C46)	W1072	$ 6.39	4	$ 25.56	$ 5.90	4	$ 23.60
606	**5838**	ADAPTER MALE 2IN COPPER CxM - W1187 (S12-C45)	W1187	$ 14.05	7	$ 98.35	$ 12.80	7	$ 89.60
607	**5839**	ADAPTER FEMALE 2IN COPPER CxF - CFAK- W1287 (S12-C43)	W1287	$ 17.63	4	$ 70.52	$ 16.10	4	$ 64.40
608	**5840**	ELL 90 DEG. 2IN COPPER CxC - C9K- W2086 (S12-C44)	W2086	$ 12.73	7	$ 89.11	$ 11.60	7	$ 81.20
609		**12. SUBTOTAL**				**$ 3,332.02**			**$ 3,261.00**
610		**13. PVC PARTS & FITTINGS / SPEARS OR APPROVED EQUAL**							
611	**105**	VALVE 3/4IN BALL SXS SCH40 PVC - 2622-007 *SPEARS* (S16-E43)	2622-007	$ 6.00	33	$ 198.00	$ 6.12	33	$ 201.96
612	**106**	VALVE BALL 1IN SXS SCH 40 2622-010 *SPEARS* (S16-E44)	2622-010	$ 7.76	6	$ 46.56	$ 8.32	6	$ 49.92
613	**361**	ADAPTER 4IN SCH40 TO 4IN SDR26 - PVC (S06-A06)	SDR-26	$ 4.75	31	$ 147.25	$ 6.10	31	$ 189.10
614	**362**	REDUCER 6x4IN SxG SDR-26 SEWER (S06-A03)	SDR-26	$ 17.63	2	$ 35.26	$ 19.00	2	$ 38.00
615	**363**	REDUCER 8x6IN GASKET ENDS - SDR-26 (S07-A17)	SDR-26	$ 35.36	1	$ 35.36	$ 41.70	1	$ 41.70
616	**364**	SADDLE WYE 8x4IN SEWER SDR-26 - GASKET END (S07-A19)	SDR-26	$ 17.74	1	$ 17.74	$ 41.60	1	$ 41.60
617	**369**	TEE 8x8x6IN SANITARY - BELL ENDS (S07-A16)		$ 38.03	1	$ 38.03	$ 46.60	1	$ 46.60

SUPPLIERS FOR WATER AND SEWER PRODUCTS
BID TABULATION
E-BID #20120009

	A	B	E	G	H	I	J	K	L
1		**Company Name:**		**HD WATERWORKS**			**FERGUSON WATERWORKS**		
2	**Item**	**Item Description**	**Mfg. Part No.**	**Unit Price**	**Yrly Qty Est**	**Total**	**Unit Price**	**Yrly Qty Est**	**Total**
618	**372**	WYE 6x4IN SINGLE - PVC P601-532 *SPEARS* (S07-A21)	P601-532	$ 23.75	1	$ 23.75	$ 29.70	1	$ 29.70
619	**374**	WYE SEWER 6x4x4IN DOUBLE - SDR26 (S07-A20)	SDR-26	$ 39.61	3	$ 118.83	$ 49.00	3	$ 147.00
620	**376**	WYE 8x6IN SEWER SDR-26 - GASKET END (S07-A15)	SDR-26	$ 38.94	2	$ 77.88	$ 47.80	2	$ 95.60
621	**379**	PLUG 4IN SEWER SPIGOT - PVC (S06-A05)		$ 1.90	1	$ 1.90	$ 2.60	1	$ 2.60
622	**380**	CAP 6IN SEWER GASKET END SDR26 - PVC (S07-A25)	SDR-26	$ 19.44	1	$ 19.44	$ 20.90	1	$ 20.90
623	**382**	PLUG 6IN SEWER SPIGOT - PVC (S07-A24)		$ 3.15	6	$ 18.90	$ 3.90	6	$ 23.40
624	**384**	PLUG 8IN SEWER SPIGOT - SDR-26 (S07-A23)	SDR-26	$ 12.82	1	$ 12.82	$ 13.80	1	$ 13.80
625	**385**	COUPLING 4 X 4IN SDR 26 PVC - GASKET END (S06-A07)	SDR-26	$ 8.93	5	$ 44.65	$ 9.60	5	$ 48.00
626	**387**	COUPLING 6IN PVC FOR SDR26 - GASKET END (S06-A01)	SDR-26	$ 20.53	2	$ 41.06	$ 22.10	2	$ 44.20
627	**391**	ELL 22-1/2 DEG.4IN BELL X BELL - FOR SDR-26 (S06-A09)	SDR-26	$ 12.36	1	$ 12.36	$ 13.30	1	$ 13.30
628	**392**	ELL 45 DEG.4IN BELL X BELL PVC - SDR-26 (S06-A08)	SDR-26	$ 9.32	1	$ 9.32	$ 10.10	1	$ 10.10
629	**393**	ELL 45 DEG. 4IN BELL X SPIGOT - SDR-26 PVC (S06-A11)	SDR-26	$ 8.60	1	$ 8.60	$ 9.30	1	$ 9.30
630	**394**	ELL 45 DEG 6IN BELL X BELL PVC - SDR26 (S06-A02)	SDR-26	$ 17.07	1	$ 17.07	$ 18.40	1	$ 18.40
631	**395**	ELL 45 DEG.6IN BELL X SPICKET - 27064GS SDR 26 (S06-A16)	SDR-26	$ 13.47	6	$ 80.82	$ 13.60	6	$ 81.60
632	**396**	CLEAN OUT 4 IN S-SDR 26 X THRD - SCH40 PVC *PER EA.* (S06-A12)	SDR-26	$ 2.15	5	$ 10.75	$ 2.56	5	$ 12.80
633	**397**	PLUG 3IN THRD SCH40 *FLUSH* - P110-030 CLEANOUT 50/BX *SPEARS* (S06-A13)	P110-030	$ 1.43	317	$ 453.31	$ 1.39	317	$ 440.63
634	**398**	PLUG 4IN THRD SCH40 *FLUSH* - P110-40 25/BX *SPEARS* (S06-A14)	P110-40	$ 1.40	158	$ 221.20	$ 1.40	158	$ 221.20
635	**399**	PLUG 6IN THRD SCH 40 FLUSH - P110-060 *SPEARS* (S06-A15)	P110-060	$ 3.13	11	$ 34.43	$ 3.43	11	$ 37.73
636	**400**	ADAPTER FEMALE 6IN SCH40 PVC - 435-060 *SPEARS* (S06-A32)	435-060	$ 9.06	3	$ 27.18	$ 10.94	3	$ 32.82
637	**401**	ADAPTER MALE 6IN SCH/40 436-060 *SPEARS* S06-A31)	436-060	$ 8.43	1	$ 8.43	$ 7.40	1	$ 7.40
638	**402**	CAP 6IN SLIP SCH 40 447-060 *SPEARS* (S06-A30)	447-060	$ 8.92	2	$ 17.84	$ 7.93	2	$ 15.86
639	**403**	COUPLING 6IN SCH 40 SXS PVC 429-060 *SPEARS* (S06-A29)	429-060	$ 8.64	2	$ 17.28	$ 7.69	2	$ 15.38
640	**404**	COUPLING 6IN COMP. SCH40 - 0110-60 *SPEARS* (S06-A28)	0110-60	$ 58.98	1	$ 58.98	$ 51.90	1	$ 51.90
641	**405**	ELL 45 DEG.6IN SXS SCH 40 PVC 417-060 * SPEARS* (S06-A27)	417-060	$ 19.17	2	$ 38.34	$ 16.84	2	$ 33.68
642	**406**	ELL 90 6IN SxS SCH40 406-060 *SPEARS* (S06-A26)	406-060	$ 18.94	6	$ 113.64	$ 16.65	6	$ 99.90
643	**407**	REDUCER 6x4IN SxS SCH40 - 437-532 *SPEARS* (S06-A25)	437-532	$ 8.95	8	$ 71.60	$ 7.96	8	$ 63.68
644	**408**	TEE 6IN SLIP SCH40 - 401-060 *SPEARS* (S06-A24)	401-060	$ 29.75	1	$ 29.75	$ 25.52	1	$ 25.52
645	**410**	COUPLING 8IN SCH 40 SXS - 429-080 *SPEARS* (S06-A21)	429-080	$ 16.14	1	$ 16.14	$ 13.85	1	$ 13.85
646	**411**	ELL 45 DEG.8IN SXS SCH 40 - 417-080 *SPEARS* (S06-A20)	417-080	$ 46.10	1	$ 46.10	$ 39.54	1	$ 39.54
647	**421**	COUPLING 4IN SXS SCH40 PVC 429-040 *SPEARS* *6/BX* (S05-A01)	429-040	$ 2.74	119	$ 326.06	$ 2.40	119	$ 285.60
648	**422**	ELL 22-1/2 DEG 4IN SxS SCH40 - 416-040 *SPEARS*	416-040	$ 11.08	1	$ 11.08	$ 9.74	1	$ 9.74
649	**423**	ELL 45 DEG 4IN SxS SCH40 PVC - 417-040 *SPEARS*	417-040	$ 7.76	1	$ 7.76	$ 6.82	1	$ 6.82
650	**424**	ELL 90 4IN SxS SCH40 PVC 406-040 *SPEARS* (S05-A03)	406-040	$ 5.95	11	$ 65.45	$ 5.23	11	$ 57.53

SUPPLIERS FOR WATER AND SEWER PRODUCTS
BID TABULATION
E-BID #20120009

	A	B	E	G	H	I	J	K	L
1		Company Name:		HD WATERWORKS			FERGUSON WATERWORKS		
2	Item	Item Description	Mfg. Part No.	Unit Price	Yrly Qty Est	Total	Unit Price	Yrly Qty Est	Total
651	425	PLUG 4 IN THRD SCH40 PVC *5 PER BX* (S05-A04)		$ 5.04	1	$ 5.04	$ 4.78	1	$ 4.78
652	426	REDUCER 4INx3IN SLIP SCH40 PVC 437-422 *SPEARS* *6/BX* (S05-A07)	437-422	$ 3.61	33	$ 119.13	$ 3.18	33	$ 104.94
653	427	TEE 4IN SLIP SCH40 PVC 401-040 *SPEARS* (S05-A13)	401-040	$ 8.85	2	$ 17.70	$ 7.77	2	$ 15.54
654	428	VALVE 4IN CHECK SxS SCH40 - S475P PVC (S05-A14)	S475P	$ 21.02	1	$ 21.02	$ 439.29	1	$ 439.29
655	429	WYE 4 IN SINGLE DWV PVC (S05-A15)		$ 13.11	5	$ 65.55	$ 12.90	5	$ 64.50
656	430	COUPLING 3IN SxS SCH40 PVC 429-030 *SPEARS* *10/BX* (S05-B01)	429-030	$ 1.89	194	$ 366.66	$ 1.65	194	$ 320.10
657	431	ELL 22-1/2 DEG 3IN SxS SCH40 - 416-030 *SPEARS*	416-030	$ 6.18	1	$ 6.18	$ 5.43	1	$ 5.43
658	432	ELL 45 DEG 3IN SxS SCH 40 PVC - 417-030 *SPEARS*	417-030	$ 4.33	1	$ 4.33	$ 3.80	1	$ 3.80
659	433	ELL 90 3IN S X S SCH40 PVC 406-030 * SPEARS*	406-030	$ 3.33	1	$ 3.33	$ 2.93	1	$ 2.93
660	434	PLUG 3IN THRD SCH40 PVC (S05-B04)		$ 2.23	1	$ 2.23	$ 2.20	1	$ 2.20
661	436	REDUCER 3 X 1-1/2" SxS SCH40 437-337 *SPEARS* (S05-B05)	437-337	$ 1.61	1	$ 1.61	$ 1.41	1	$ 1.41
662	437	REDUCER 3 X 2IN SxS SCH40 - 437-338 (S05-B06)	437-338	$ 1.61	15	$ 24.15	$ 1.41	15	$ 21.15
663	438	TEE 3IN SLIP SCH 40 PVC - 401-030 *SPEARS* (S05-B07)	401-030	$ 4.88	1	$ 4.88	$ 4.29	1	$ 4.29
664	439	VALVE 3IN CHECK SxS SCH40 - PVC (S05-B08)		$ 26.97	1	$ 26.97	$ 319.32	1	$ 319.32
665	440	WYE 3IN SLIP - DWV SCH 40 P600-030 NON-PRESSURE *SPEARS* (S06-A04	P600-030	$ 3.24	1	$ 3.24	$ 3.40	1	$ 3.40
666	441	ADAPTER 4IN FEMALE SCH40 PVC 435-040 *SPEARS* *6/BX* (S05-A08)	435-040	$ 3.38	147	$ 496.86	$ 2.98	147	$ 438.06
667	442	ADAPTER 4IN MALE SCH40 PVC 436-040 *SPEARS* *5/BX* (S05-A09)	436-040	$ 3.23	58	$ 187.34	$ 2.84	58	$ 164.72
668	443	CAP 4IN SLIP SCH 40 PVC 6/bx- 447-040 *SPEARS* (S05-A10)	447-040	$ 3.73	25	$ 93.25	$ 3.27	25	$ 81.75
669	444	CAP 4IN THREADED SCH40 PVC 448-030 6/bx (S05-A11)	448-030	$ 3.75	1	$ 3.75	$ 2.05	1	$ 2.05
670	445	COUPLING 4IN COMPRESSION PVC SCH-40 S110-40 *SPEARS* (S05-A12)	S110-40	$ 26.19	11	$ 288.09	$ 22.79	11	$ 250.69
671	446	ELL 22-1/2 DEG. 2IN SxS SCH40 - 416-020 *SPEARS* (S05-C02)	416-020	$ 1.53	2	$ 3.06	$ 1.38	2	$ 2.76
672	447	ELL 45 DEG. 2IN SxS SCH40 PVC 25bx- 417-020 *SPEARS* (S05-C03)	417-020	$ 1.07	46	$ 49.22	$ 0.96	46	$ 44.16
673	448	ELL 90 2IN S X FPT SCH40 PVC (S05-C04)		$ 1.95	4	$ 7.80	$ 1.76	4	$ 7.04
674	449	ELL 2IN 90 ST S X MPT SCH40 PVC (S05-C05)		$ 2.35	3	$ 7.05	$ 2.20	3	$ 6.60
675	450	ELL 90 2IN SXS SCH40 25/bx 406-020 *SPEARS* (S05-C06)	406-020	$ 0.92	41	$ 37.72	$ 0.83	41	$ 34.03
676	451	ELL 2IN 90 ST FPT X MPT SCH40 PVC (S05-C07)		$ 2.41	2	$ 4.82	$ 2.50	2	$ 5.00
677	452	PLUG THRD 2IN SCH40 - 450-020 10/BX *SPEARS* (S05-C08)	450-020	$ 1.06	14	$ 14.84	$ 1.10	14	$ 15.40
678	453	TEE 2IN SLIP SCH40 401-020 *SPEARS* (S05-C09)	401-020	$ 1.12	17	$ 19.04	$ 1.01	17	$ 17.17
679	454	VALVE 2IN CHECK SXS SCH 40 - 1520-020 (S05-C10)	1520-020	$ 15.13	4	$ 60.52	$ 103.50	4	$ 414.00
680	455	COUPLING 2-1/2IN SxS SCH40 PVC 429-025 *SPEARS* *12/BX* (S05-C24)	429-025	$ 1.20	4	$ 4.80	$ 1.09	4	$ 4.36
681	456	COUPLING 2-1/2IN COMP SCH40 S110-25 *SPEARS* *6/BX* (S05-C20)	S110-25	$ 12.19	1	$ 12.19	$ 10.59	1	$ 10.59
682	457	ADAPTER 3IN FEMALE SCH40 PVC 435-030 *SPEARS* *10/BX* (S05-B10)	435-030	$ 2.04	274	$ 558.96	$ 1.84	274	$ 504.16
683	458	ADAPTER 3IN MALE SCH40 PVC 436-030 *SPEARS* *10/BX* (S05-B12)	436-030	$ 2.53	83	$ 209.99	$ 2.23	83	$ 185.09

SUPPLIERS FOR WATER AND SEWER PRODUCTS
BID TABULATION
E-BID #20120009

	A	B	E	G	H	I	J	K	L
1		Company Name:		HD WATERWORKS			FERGUSON WATERWORKS		
2	Item	Item Description	Mfg. Part No.	Unit Price	Yrly Qty Est	Total	Unit Price	Yrly Qty Est	Total
684	459	CAP 3IN SLIP SCH40 PVC 10/bx- 447-030 *SPEARS* (S05-B13)	447-030	$ 1.64	94	$ 154.16	$ 1.44	94	$ 135.36
685	460	CAP 3IN THREADED SCH40 PVC - 448-030 *SPEARS* (S05-B14)	448-030	$ 2.14	4	$ 8.56	$ 1.88	4	$ 7.52
686	461	COUPLING 3IN COMP SCH40 PVC - S110-30 *SPEARS* *4/BX* (S05-B15)	S110-30	$ 15.91	2	$ 31.82	$ 13.85	2	$ 27.70
687	462	ELL 90 1-1/2IN ST SxMPT SCH40 - 410-015 *SPEARS* (S05-D01)	410-015	$ 0.95	3	$ 2.85	$ 0.86	3	$ 2.58
688	463	ELL 90 1-1/2IN SXS SCH40 PVC 406-015 *SPEARS* *25/BX* (S05-D02)	406-015	$ 0.58	245	$ 142.10	$ 0.56	245	$ 137.20
689	464	SWEEP 90 1-1/2IN SxS SCH40 - D304-015 *SPEARS* (S05-D04)	D304-015	$ 1.02	16	$ 16.32	$ 1.03	16	$ 16.48
690	465	ELL 90 1-1/2IN ST MPTxFPT SCH40 - 412-015 *SPEARS* (S05-D05)	412-015	$ 1.26	1	$ 1.26	$ 1.21	1	$ 1.21
691	466	TEE 1-1/2IN SLIP SCH40 PVC 401-015 25/bx *SPEARS* (S05-D06)	401-015	$ 0.77	45	$ 34.65	$ 0.75	45	$ 33.75
692	467	PLUG 1-1/2IN THRD SCH40 PVC - 450-015 *SPEARS* (S05-D07)	450-015	$ 0.82	11	$ 9.02	$ 0.79	11	$ 8.69
693	468	VALVE BALL 1-1/2IN SxS SCH40 2622-015 *SPEARS* *20bx* (S05-D09)	2622-015	$ 15.67	243	$ 3,807.81	$ 17.30	243	$ 4,203.90
694	469	VALVE 1-1/2IN CHECK SXS 1520C-15 *CLEAR* FLO CONTROL *12BX* (S05-D10)	1520C-15	$ 12.02	329	$ 3,954.58	$ 14.38	329	$ 4,731.02
695	470	ADAPTER FEMALE 2IN SCH40 PVC 435-020 *SPEARS* *10/BX* (S05-C11)	435-020	$ 0.60	12	$ 7.20	$ 0.57	12	$ 6.84
696	471	ADAPTER 2IN MALE SCH40 PVC - 436-020 *SPEARS* *25/BX* (S05-C13)	436-020	$ 0.59	76	$ 44.84	$ 0.56	76	$ 42.56
697	472	REDUCER MALE 2x1-1/2 SxMPT 436-251 SCH40 *SPEARS* *10/BX* (S05-C19)	436-251	$ 1.42	9	$ 12.78	$ 1.28	9	$ 11.52
698	473	CAP 2IN SLIP SCH40 PVC 447-020 *SPEARS* *10 PER BX* (S05-C15)	447-020	$ 0.47	28	$ 13.16	$ 0.45	28	$ 12.60
699	474	CAP 2IN THREADED SCH40 448-020 10/BX *SPEARS* (S05-C16)	448-020	$ 1.11	11	$ 12.21	$ 1.07	11	$ 11.77
700	475	COUPLING 2IN COMP SCH40 PVC - 0110-20 *SPEARS* *12/BX* (S05-C12)	0110-20	$ 6.53	15	$ 97.95	$ 5.70	15	$ 85.50
701	476	COUPLING 2IN SCH40 SXS PVC - 429-020 *SPEARS* *25/BX* (S05-C17)	429-020	$ 0.55	52	$ 28.60	$ 0.49	52	$ 25.48
702	477	ELL 45 DEG 1IN SxS SCH40 PVC 50/bx- 417-010 *SPEARS* (S05-E01)	417-010	$ 0.47	95	$ 44.65	$ 0.45	95	$ 42.75
703	478	ELL 90 1IN SxFPT SCH40 PVC - 407-010 *SPEARS* (S05-E02)	407-010	$ 0.41	5	$ 2.05	$ 0.39	5	$ 1.95
704	479	ELL 90 1IN ST SxMPT SCH40 PVC 50/bx- 410-010 *SPEARS* (S05-E03)	410-010	$ 0.66	24	$ 15.84	$ 0.63	24	$ 15.12
705	480	ELL 90 1IN SxS SCH40 PVC - 406-010 *SPEARS* *50 PER BX* (S05-E04)	406-010	$ 0.31	421	$ 130.51	$ 0.29	421	$ 122.09
706	481	ELL 90 1IN STREET MPTxFPT SCH40 412-010 PVC (S05-E05)	412-010	$ 0.94	2	$ 1.88	$ 0.91	2	$ 1.82
707	482	ELL 90 1IN FPTxFPT SCH40 PVC (S05-E06)		$ 1.17	2	$ 2.34	$ 1.12	2	$ 2.24
708	483	PLUG 1IN SLIP SCH40 PVC 449-010 *SPEARS* (S05-E07)	449-010	$ 0.47	1	$ 0.47	$ 0.45	1	$ 0.45
709	484	PLUG 1IN THRD SCH40 PVC - 450-010 *SPEARS* (S05-E08)	450-010	$ 0.73	1	$ 0.73	$ 0.69	1	$ 0.69
710	485	TEE 1IN SLIP SCH40 PVC - 401-010 *SPEARS* *50 PER BX* (S05-E09)	401-010	$ 0.41	59	$ 24.19	$ 0.41	59	$ 24.19
711	486	COUPLING 1-1/4IN SXS SCH40 PVC - 429-012 *SPEARS* 25BX (S05-E10)	429-012	$ 0.33	1149	$ 379.17	$ 0.39	1149	$ 448.11
712	487	ADAPTER MALE HOSE 1-1/2IN PVC - 1436-015 25/BX *SPEARS* (S05-D08)	1436-015	$ 1.18	52	$ 61.36	$ 1.15	52	$ 59.80
713	488	ADAPTER 1-1/2IN FEMALE SCH40 - 435-015 *SPEARS* *25/BX* (S05-D11)	435-015	$ 0.44	35	$ 15.40	$ 0.43	35	$ 15.05
714	489	ADAPTER 1-1/2IN MALE SCH40 PVC 436-015 SPEARS 25/BX (S05-D12)	436-015	$ 0.44	261	$ 114.84	$ 0.43	261	$ 112.23
715	490	REDUCER ADAPT 1-1/4 x 1-1/2 SxMPT 436-169 *SPEARS* *25/BX* (S05-D18)	436-169	$ 1.03	82	$ 84.46	$ 0.99	82	$ 81.18
716	491	CAP 1-1/2IN SLIP SCH40 PVC 25/bx- 447-015 *SPEARS* (S05-D13)	447-015	$ 0.39	62	$ 24.18	$ 0.40	62	$ 24.80

SUPPLIERS FOR WATER AND SEWER PRODUCTS
BID TABULATION
E-BID #20120009

	A	B	E	G	H	I	J	K	L
1		Company Name:		HD WATERWORKS			FERGUSON WATERWORKS		
2	Item	Item Description	Mfg. Part No.	Unit Price	Yrly Qty Est	Total	Unit Price	Yrly Qty Est	Total
717	492	CAP 1-1/2IN THREADED SCH40 PVC 448-015 *SPEARS* 25BX (S05-D14)	448-015	$ 0.62	113	$ 70.06	$ 0.60	113	$ 67.80
718	493	COUPLING 1-1/2 IN COMPRESSION S110-15 *SPEARS* *16/BX* (S05-D15)	S110-15	$ 4.96	33	$ 163.68	$ 4.33	33	$ 142.89
719	494	COUPLING 1-1/2IN SxS SCH40 PVC 429-015 *SPEARS* 25BX (S05-D16)	429-015	$ 0.35	1659	$ 580.65	$ 0.37	1659	$ 613.83
720	495	CROSS 1-1/2IN SLIP SCH40 PVC - 420-015 *SPEARS* *25 PER BX* (S05-E18)	420-015	$ 1.81	83	$ 150.23	$ 1.63	83	$ 135.29
721	496	ELL 45 DEG 1-1/2IN SxS SCH40 417-015 *SPEARS* *25BX* (S05-E19)	417-015	$ 0.82	2245	$ 1,840.90	$ 0.79	2245	$ 1,773.55
722	497	ELL 90 1-1/2IN STREET S x FPT PVC 407-015 SCH40 *SPEARS* *25/BX*(S05-D	407-015	$ 0.76	64	$ 48.64	$ 0.73	64	$ 46.72
723	498	ADAPTER FEMALE 1/2IN SCH40 PVC - 435-005 50/BX *SPEARS* (S14-D02)	435-005	$ 0.17	6	$ 1.02	$ 0.19	6	$ 1.14
724	499	ADAPTER MALE 1/2IN SCH40 PVC - 436-005 *SPEARS* (S14-D03)	436-005	$ 0.14	21	$ 2.94	$ 0.20	21	$ 4.20
725	500	COUPLING 1/2IN SxS SCH40 - 429-005 *SPEARS* (S14-D05)	429-005	$ 0.10	16	$ 1.60	$ 0.15	16	$ 2.40
726	501	ELL 45 DEG 1/2IN SxS SCH40 PVC - 417-005 *SPEARS* (S14-D07)	417-005	$ 0.25	6	$ 1.50	$ 0.26	6	$ 1.56
727	502	ELL 90 DEG 1/2IN SxFPT SCH40 - 407-005 *SPEARS* (S14-D01)	407-005	$ 0.19	7	$ 1.33	$ 0.20	7	$ 1.40
728	503	ELL 90 DEG.1/2IN MPTXS SCH40 - PVC 410-005 *SPEARS* (S14-D04)	410-005	$ 0.33	5	$ 1.65	$ 0.34	5	$ 1.70
729	504	ELL 90 DEG 1/2IN SxS SCH40 PVC - 406-005 50/BX *SPEARS* (S14-D10)	406-005	$ 0.15	13	$ 1.95	$ 0.16	13	$ 2.08
730	505	ADAPTER FEMALE 3/4IN SCH40 PVC - 435-007 *SPEARS* (S14-D11)	435-007	$ 0.22	71	$ 15.62	$ 0.25	71	$ 17.75
731	506	ADAPTER MALE 3/4IN SCH40 PVC - 436-007 *SPEARS* *50 PER BX* (S14-D12)	436-007	$ 0.15	2563	$ 384.45	$ 0.20	2563	$ 512.60
732	507	CAP 3/4IN SLIP SCH40 PVC - 447-007 50/BX *SPEARS* (S14-D09)	447-007	$ 0.16	289	$ 46.24	$ 0.20	289	$ 57.80
733	508	CAP 3/4IN THREADED SCH40 PVC - 448-007 *SPEARS* (S14-D14)	448-007	$ 0.33	7	$ 2.31	$ 0.35	7	$ 2.45
734	509	COUPLING 3/4IN COMPRESSION PVC - S110-07 *SPEARS* (S14-D16)	S110-07	$ 2.41	16	$ 38.56	$ 2.30	16	$ 36.80
735	510	COUPLING 3/4IN SxS SCH40 429-007 50/BX *SPEARS* (S14-D08)	429-007	$ 0.14	829	$ 116.06	$ 0.20	829	$ 165.80
736	511	COUPLING 3/4IN FPTxFPT SCH40 - 430-007 *SPEARS* (S14-D13)	430-007	$ 0.35	8	$ 2.80	$ 0.37	8	$ 2.96
737	512	CROSS 3/4IN SLIP SCH40 PVC - 420-007 *SPEARS* (S14-D19)	420-007	$ 0.97	21	$ 20.37	$ 0.93	21	$ 19.53
738	513	ELL 45 DEG 3/4IN SxS SCH40 417-007 *SPEARS* *50 PER BX* (S14-D20)	417-007	$ 0.39	837	$ 326.43	$ 0.37	837	$ 309.69
739	514	ELL 90 3/4IN FPTxS SCH40 PVC - 407-007 *SPEARS* (S14-D17)	407-007	$ 0.22	139	$ 30.58	$ 0.25	139	$ 34.75
740	515	ELL 90 DEG 3/4IN FPTxMPT SCH40 412-007 50/BX *SPEARS* (S14-D18)	412-007	$ 0.55	122	$ 67.10	$ 0.56	122	$ 68.32
741	516	ELL 90 3/4IN STR SxMPT SCH40 - 410-007 50/BX *SPEARS* (S14-D24)	410-007	$ 0.39	251	$ 97.89	$ 0.40	251	$ 100.40
742	517	ELL 90 3/4IN SxS SCH40 PVC - 406-007 *SPEARS* *50 PER BX* (S14-D25)	406-007	$ 0.17	2898	$ 492.66	$ 0.20	2898	$ 579.60
743	518	PLUG 3/4IN THRD SCH40 PVC - 450-007 *SPEARS* *PER EA.* (S14-D21)	450-007	$ 0.44	3	$ 1.32	$ 0.50	3	$ 1.50
744	519	TEE 3/4IN SLIP SCH 40 - 401-007 *SPEARS* (S14-D22)	401-007	$ 0.22	71	$ 15.62	$ 0.23	71	$ 16.33
745	520	ADAPTER 3/4x1IN - MPTxS - SCH40 436-102 50/BX *SPEARS* (S14-D29)	436-102	$ 0.39	143	$ 55.77	$ 0.40	143	$ 57.20
746	521	ADAPTER FEMALE 1IN SCH40 PVC - 435-010 *SPEARS* (S14-D26)	435-010	$ 0.25	21	$ 5.25	$ 0.30	21	$ 6.30
747	522	ADAPTER MALE 1IN SCH40 PVC - 436-010 50/BX *SPEARS* (S14-D27)	436-010	$ 0.27	199	$ 53.73	$ 0.30	199	$ 59.70
748	523	ADAPTER FEMALE 3/4x1IN SCH40 435-131 50/BX *SPEARS* (S14-D28)	435-131	$ 0.41	4	$ 1.64	$ 0.43	4	$ 1.72
749	524	CAP 1IN SLIP SCH40 PVC - 447-010 *SPEARS* *50 PER BX* (S14-D30)	447-010	$ 0.25	128	$ 32.00	$ 0.30	128	$ 38.40

SUPPLIERS FOR WATER AND SEWER PRODUCTS
BID TABULATION
E-BID #20120009

	A	B	E	G	H	I	J	K	L
1		Company Name:		HD WATERWORKS			FERGUSON WATERWORKS		
2	Item	Item Description	Mfg. Part No.	Unit Price	Yrly Qty Est	Total	Unit Price	Yrly Qty Est	Total
750	525	CAP 1IN THREADED SCH40 PVC 448-010 *SPEARS* (S14-D31)	448-010	$ 0.50	3	$ 1.50	$ 0.49	3	$ 1.47
751	526	COUPLING COMP 1IN SCH40 PVC - S110-10 *SPEARS* (S14-D32)	S110-10	$ 3.10	1	$ 3.10	$ 2.74	1	$ 2.74
752	527	COUPLING 1IN SxS SCH40 PVC - 429-010 *SPEARS* *50 PER BX* (S14-D33)	429-010	$ 0.24	537	$ 128.88	$ 0.26	537	$ 139.62
753	528	REDUCER 2 x 1-1/2IN MPTxFPT SCH40 - 439-251 *SPEARS* (S14-D34)	439-251	$ 1.20	1	$ 1.20	$ 1.09	1	$ 1.09
754	529	REDUCER 2x 1-1/2IN SxF SCH40 - PVC (S14-D38)		$ 0.97	7	$ 6.79	$ 2.00	7	$ 14.00
755	530	REDUCER 2 x 1-1/2IN SxS SCH40 - 437-251 25/BX *SPEARS* (S14-D36)	437-251	$ 0.68	55	$ 37.40	$ 0.65	55	$ 35.75
756	531	REDUCER 2x1IN SxFPT SCH40 PVC (S14-D37)		$ 0.97	13	$ 12.61	$ 0.88	13	$ 11.44
757	532	REDUCER 2x1IN MPTxFPT SCH40 PVC - 439-249 *SPEARS* (S14-D40)	439-249	$ 1.20	6	$ 7.20	$ 1.09	6	$ 6.54
758	533	REDUCER 2x1IN SxS SCH40 * 437-249* (S14-D35)	437-249	$ 0.68	3	$ 2.04	$ 0.61	3	$ 1.83
759	534	REDUCER 2 x 3/4IN SxFPT SCH40 PVC (S14-D39)		$ 0.97	11	$ 10.67	$ 1.00	11	$ 11.00
760	535	REDUCER 2x 3/4IN SxS SCH40 PVC 437-248 *SPEARS* (S14-D44)	437-248	$ 0.68	11	$ 7.48	$ 0.64	11	$ 7.04
761	536	REDUCER 1-1/2x1-1/4 SxS - 437-212 *SPEARS* *25 PER BX* (S14-D50)	437-212	$ 0.41	729	$ 298.89	$ 0.40	729	$ 291.60
762	537	REDUCER 1-1/2 x 1IN MPTxFPT SCH40 - 439-211 *SPEARS* (S14-D47)	439-211	$ 1.12	23	$ 25.76	$ 1.01	23	$ 23.23
763	538	REDUCER 1-1/2 x 1IN SxFPT SCH40 - 438-211 25/BX *SPEARS* (S14-D53)	438-211	$ 0.73	32	$ 23.36	$ 0.65	32	$ 20.80
764	539	REDUCER 1-1/2 X 1IN SXS SCH40 437-211 25/bx *SPEARS* (S14-D46)	437-211	$ 0.41	25	$ 10.25	$ 0.50	25	$ 12.50
765	540	REDUCER 1-1/2 x 3/4IN MPTxFPT SCH40 - PVC 439-210 (S14-D45)	439-210	$ 1.12	3	$ 3.36	$ 0.99	3	$ 2.97
766	541	REDUCER 1-1/2 x 3/4IN SxFPT SCH40 - PVC (S14-D51)		$ 0.73	1	$ 0.73	$ 0.70	1	$ 0.70
767	542	REDUCER 1-1/2x 3/4IN SxS SCH40-437-210 25/bx (S14-D54)	437-210	$ 0.41	9	$ 3.69	$ 0.40	9	$ 3.60
768	543	REDUCER 1 x 3/4IN SxFPT SCH40 - 438-131 (S14-D43)	438-131	$ 0.41	7	$ 2.87	$ 0.39	7	$ 2.73
769	544	REDUCER 1x3/4IN SxS SCH40 PVC - 437-131 *SPEARS* *50 PER BX* (S14-D52)	437-131	$ 0.30	268	$ 80.40	$ 0.30	268	$ 80.40
770	545	REDUCER 3/4INx1/2IN SxS SCH40 437-101 *SPEARS* *50 PER BX* (S14-D49)	437-101	$ 0.16	31	$ 4.96	$ 0.20	31	$ 6.20
771	546	REDUCER 1/2 x 1/4IN SxFPT SCH40 - 438-072 (S14-D41)	438-072	$ 0.33	24	$ 7.92	$ 0.35	24	$ 8.40
772	737	VALVE BALL 4 IN SxS SCH40 2622-040 *SPEARS* (S05-A16)	2622-040	$ 117.28	1	$ 117.28	$ 116.80	1	$ 116.80
773	1258	CLEANOUT 2 WAY 3" SXSXS SCH40 D448-030 10/BX *LESCO ONLY* (S05-C25)	D448-030	$ 14.06	118	$ 1,659.08	$ 11.90	118	$ 1,404.20
774	1259	CLEANOUT 2 WAY 4" SXSXS SCH40 D448-040 5/BX *LESCO ONLY* (S05-F09)	D448-040	$ 27.64	87	$ 2,404.68	$ 14.00	87	$ 1,218.00
775	1400	WYE 6IN SXS SCH/40 P600-060 *SPEARS* (S06-A23)	P600-060	$ 46.04	1	$ 46.04	$ 18.39	1	$ 18.39
776	1401	ADAPTER MALE 8IN SCH/40 - PVC (S06-A17)		$ 38.28	1	$ 38.28	$ 35.76	1	$ 35.76
777	1403	WYE 3IN SxS SCH 40 PVC - 475-030 PRESSURE *SPEARS* (S05-B09)	475-030	$ 14.33	1	$ 14.33	$ 13.93	1	$ 13.93
778	1404	ELL 90 8IN SXS SCH 40 - PVC 406-080 (S06-A19)	406-080	$ 48.77	1	$ 48.77	$ 41.83	1	$ 41.83
779	1405	ADAPTER FEMALE 8IN SCH/40 - PVC (S06-A18)		$ 23.47	1	$ 23.47	$ 21.92	1	$ 21.92
780	1614	TEE SANITARY 3IN SxSxS PVC - P400-030 *5 PER BX* (S04-C24)	P400-030	$ 2.50	1	$ 2.50	$ 2.68	1	$ 2.68
781	1615	TEE SANITARY 4IN SxSxS PVC - P400-040 *5 PER BX* (S04-C25)	P400-040	$ 11.30	1	$ 11.30	$ 4.67	1	$ 4.67
782	1798	COUPLING 8IN PVC FOR SDR35 - GASKET END (S07-A22)	SDR-26	$ 16.22	1	$ 16.22	$ 20.60	1	$ 20.60

SUPPLIERS FOR WATER AND SEWER PRODUCTS
BID TABULATION
E-BID #20120009

	A	B	E	G	H	I	J	K	L
1		**Company Name:**		**HD WATERWORKS**			**FERGUSON WATERWORKS**		
2	Item	Item Description	Mfg. Part No.	Unit Price	Yrly Qty Est	Total	Unit Price	Yrly Qty Est	Total
783	**1843**	REDUCER 3/4x1/4IN SxFPT SCH40 PVC 438-098 *SPEARS* (S14-D42)	438-098	$ 0.44	5	$ 2.20	$ 0.35	5	$ 1.75
784	**1938**	ADAPTER HOSE 3/4IN SCH40 PVC - 1436-007 GRAY *SPEARS* (S16-E28)	1436-007	$ 0.42	11	$ 4.62	$ 0.65	11	$ 7.15
785	**1939**	ELL 90 3/4IN MxHOSE BARB SCH40 - 1413-007 *SPEARS* (S16-E29)	1413-007	$ 1.84	1	$ 1.84	$ 1.74	1	$ 1.74
786	**2004**	CROSS 2IN SLIP PVC SCH 40 - 420-020 (S05-C14)	420-020	$ 2.67	1	$ 2.67	$ 2.34	1	$ 2.34
787	**2032**	REDUCER 1 1/2 x 1-1/4 SxFPT SCH40 - 438-212 (S14-D48)	438-212	$ 0.73	2	$ 1.46	$ 0.65	2	$ 1.30
788	**2742**	CAP 1/2IN SLIP SCH40 PVC 447-005 (S14-D06)	447-005	$ 0.14	14	$ 1.96	$ 0.20	14	$ 2.80
789	**3929**	TEE 3/4X3/4X1/2IN SXSXF 402-101 (S14-D15)	402-101	$ 0.33	3	$ 0.99	$ 0.32	3	$ 0.96
790	**3930**	TEE 1x1x3/4IN SxSxFPT SCH40 402-131 (S05-E12)	402-131	$ 0.73	18	$ 13.14	$ 0.69	18	$ 12.42
791	**5268**	TEE 3/4IN SxSxFPT SCH40 50/BX *SPEARS* 402-007 (S14-D23)	402-007	$ 0.39	279	$ 108.81	$ 0.37	279	$ 103.23
792	**5569**	ELL 90 4IN BELL X SPIGOT - SDR-35 PVC (S06-A10)	SDR-26	$ 5.16	1	$ 5.16	$ 16.60	1	$ 16.60
793	**5641**	CAP 8IN SLIP PVC SCH 40 (S06-A22)		$ 22.41	1	$ 22.41	$ 20.00	1	$ 20.00
794	**5695**	VALVE 2IN BALL SxS PVC - 2622-020 *SPEARS* (S05-C18)	2622-020	$ 20.85	7	$ 145.95	$ 21.27	7	$ 148.89
795	**5793**	REDUCER 8x4 SCH40 PVC - PART #2908040RS040H	2908040RS040H	$ 31.21	1	$ 31.21	$ 27.80	1	$ 27.80
796	**5796**	ELL 45 DEG. 2-1/2IN SxS SCH40 - 417-025 (S05-C21)	417-025	$ 2.79	1	$ 2.79	$ 2.45	1	$ 2.45
797	**5797**	ELL 90 2-1/2IN SCH40 SxS (S05-C23)		$ 2.78	1	$ 2.78	$ 2.60	1	$ 2.60
798	**5798**	REDUCER 2-1/2 x 2IN SCH40 SxS - 437-292 (S05-C22)	437-292	$ 1.10	13	$ 14.30	$ 0.99	13	$ 12.87
799	**5799**	REDUCER 3 x 2-1/2IN SCH40 SxS - 437-339 (S05-B11)	437-339	$ 1.61	8	$ 12.88	$ 1.41	8	$ 11.28
800	**5909**	SWEEP 90 DEG 3 IN SxS SCH40 - D300-030 DWV (S05-B16)	D300-030	$ 2.92	26	$ 75.92	$ 1.88	26	$ 48.88
801	**5910**	SWEEP 45 DEG 3IN SxS SCH40 - P321-030 DWV *25 PER BX* (S06-F07)	P321-030	$ 2.48	336	$ 833.28	$ 1.60	336	$ 537.60
802	**5911**	SWEEP 22 1/2 DEG 3IN SxS SCH40 P324-030 DWV *20/BX* (S05-B02)	P324-030	$ 2.67	117	$ 312.39	$ 1.72	117	$ 201.24
803	**5912**	SWEEP 90 DEG 4IN SxS SCH40 10/bx- D300-040 DWV (S05-A02)	D300-040	$ 5.34	14	$ 74.76	$ 3.44	14	$ 48.16
804	**5913**	SWEEP 45 DEG 4IN SxS SCH40 - P321-040 DWV *15 PER BX* (S05-A05)	P321-040	$ 4.25	116	$ 493.00	$ 2.74	116	$ 317.84
805	**5914**	SWEEP 22 1/2 DEG 4IN SxS SCH40 - P324-040 DWV *15/BX* (S05-A06)	P324-040	$ 4.07	69	$ 280.83	$ 2.62	69	$ 180.78
806	**5924**	SADDLE HOT TAP 2-1/2X1-1/2 IN - SPEARS HT2-291 (S08-B17)	HT2-291	$ 49.57	1	$ 49.57	$ 50.00	1	$ 50.00
807	**6016**	ELL 90 DEG 1 1/4 SCH 40 SXS 406-012 25/bx *SPEARS* (S05-E11)	406-012	$ 0.55	116	$ 63.80	$ 0.49	116	$ 56.84
808	**6024**	CLEAN OUT ADAPTER 6" SDR 26 *P1406* (S07-A18)	SDR-26	$ 9.64	7	$ 67.48	$ 11.20	7	$ 78.40
809		**13. SUBTOTAL**				**$ 26,955.94**	$ -		**$ 26,957.73**
810		**14. REPAIR CLAMPS & FERNCOS / SMITH-BLAIR, FORD OR APPROVED EQUAL**							
811	**656**	FERNCO 2 x 2IN PVC TO PVC (S07-A01)		$ 2.33	1	$ 2.33	$ 2.75	1	$ 2.75
812	**657**	FERNCO 3IN PVC TO PVC - 1056-33 (S07-A02)	1056-33	$ 2.94	22	$ 64.68	$ 3.24	22	$ 71.28
813	**658**	FERNCO CLAY TO PVC 4 x 3IN (S07-A03)		$ 4.07	3	$ 12.21	$ 4.48	3	$ 13.44
814	**659**	FERNCO 4IN PVC TO PVC - 1056-44 (S07-A04)	1056-44	$ 3.68	52	$ 191.36	$ 4.05	52	$ 210.60

SUPPLIERS FOR WATER AND SEWER PRODUCTS
BID TABULATION
E-BID #20120009

	A	B	E	G	H	I	J	K	L
1		**Company Name:**		**HD WATERWORKS**			**FERGUSON WATERWORKS**		
2	Item	Item Description	Mfg. Part No.	Unit Price	Yrly Qty Est	Total	Unit Price	Yrly Qty Est	Total
815	660	FERNCO 4IN CLAY TO PVC - 1002-44 (S07-A05)	1002-44	$ 3.68	14	$ 51.52	$ 4.05	14	$ 56.70
816	661	FERNCO 4IN CLAY TO CLAY (S07-A06)		$ 3.97	3	$ 11.91	$ 4.38	3	$ 13.14
817	662	FERNCO 6IN PVC TO PVC - 1056-66 (S07-A07)	1056-66	$ 7.87	3	$ 23.61	$ 8.66	3	$ 25.98
818	663	FERNCO 6IN CLAY TO PVC - 1002-66 (S07-A08)	1002-66	$ 7.87	2	$ 15.74	$ 8.66	2	$ 17.32
819	664	FERNCO 6IN CLAY TO CLAY (S07-A09)		$ 7.87	1	$ 7.87	$ 9.85	1	$ 9.85
820	665	FERNCO 6 X 8 IN PVC TO PVC (S07-A10)		$ 15.63	1	$ 15.63	$ 16.94	1	$ 16.94
821	667	FERNCO 8 x 8IN PVC TO PVC (S07-A12)		$ 12.11	2	$ 24.22	$ 13.33	2	$ 26.66
822	668	FERNCO 8IN CLAY TO PVC (S07-A13)		$ 12.11	7	$ 84.77	$ 13.33	7	$ 93.31
823	671	FERNCO 10X10IN CLAY TO PVC (S07-A14)		$ 17.06	1	$ 17.06	$ 21.06	1	$ 21.06
824	672	DONUT 3IN RUBBER SWCI X SCH 40 - INDIANA SEAL (S08-A09)		$ 7.63	1	$ 7.63	$ 10.00	1	$ 10.00
825	673	DONUT 4IN RUBBER CLAY BELL X - XHC/I C/BELL#432-405 (S08-A08)	432-405	$ 7.63	1	$ 7.63	$ 10.00	1	$ 10.00
826	674	DONUT 4IN RUBBER CLAY BELL X - SWC/I DICKEY BELL PVW #404 (S08-A07)	404	$ 7.63	1	$ 7.63	$ 10.00	1	$ 10.00
827	675	DONUT 4IN RUBBER CLAY BELL X - SWC/I GRIFFEN C/BELL (S08-A06)		$ 7.63	1	$ 7.63	$ 10.00	1	$ 10.00
828	676	DONUT 6IN RUBBER DICKEY - CLAY BELL #608 (S08-A05)	608	$ 12.73	1	$ 12.73	$ 20.00	1	$ 20.00
829	677	DONUT 6IN RUBBER GRIFFIN - CLAY BELL #604-609 (S08-A04)	604-609	$ 12.80	1	$ 12.80	$ 15.00	1	$ 15.00
830	678	DONUT 6 IN RUBBER 6 X 4 IN - INDIANA SEAL CS604-41 (S08-A03)	CS604-41	$ 11.63	1	$ 11.63	$ 20.00	1	$ 20.00
831	679	DONUT 8IN RUBBER INDIANA SEAL - #C5898-85 (S08-A02)	C5898-85	$ 11.63	1	$ 11.63	$ 25.00	1	$ 25.00
832	681	CLAMP REPAIR H/C 3/4 X 3 IN SS - 245-00010503-0 (S07-B01)	245-00010503-000	$ 3.82	1	$ 3.82	$ 4.10	1	$ 4.10
833	682	CLAMP REPAIR F.CIR 3/4x 3IN SS - #244-00010503-000 12/BX (S07-B02)	244-00010503-000	$ 13.11	384	$ 5,034.24	$ 13.80	384	$ 5,299.20
834	683	CLAMP REPAIR H/C 3/4 X 6 IN SS - 245-00010506-0 (S07-B03)	245-00010506-000	$ 7.11	1	$ 7.11	$ 7.70	1	$ 7.70
835	684	CLAMP REPAIR F/C 3/4 X 6 IN SS - 244-00010506-000 (S07-B04)	244-00010506-000	$ 27.71	1	$ 27.71	$ 29.80	1	$ 29.80
836	685	CLAMP REPAIR H/C 1 X 3 IN SS - 245-00013203-0 (S07-B05)	245-00013203-000	$ 4.17	1	$ 4.17	$ 4.50	1	$ 4.50
837	686	CLAMP REPAIR 1x3IN SS FULL CIRCLE - 244-013203-000 SB (S07-B06)	244-013203-000	$ 15.51	5	$ 77.55	$ 15.15	5	$ 75.75
838	687	CLAMP REPAIR F/C 1 X 6 IN SS - 244-00013206-000 (S07-B07)	244-00013206-000	$ 27.92	1	$ 27.92	$ 30.00	1	$ 30.00
839	688	CLAMP REPAIR H/C 1-1/2 X 3 IN - 245-00019003-0 (S07-B08)	245-00019003-000	$ 4.60	2	$ 9.20	$ 5.00	2	$ 10.00
840	689	CLAMP REPAIR F/C 1-1/2 X 3 IN - 244-00019003-000 *6 PER BX* (S07-B09)	244-00019003-000	$ 14.60	3	$ 43.80	$ 15.70	3	$ 47.10
841	690	CLAMP REPAIR H/C 1-1/2 X 6 IN - 245-00019006-0 (S07-B10)	245-00019006-000	$ 8.66	1	$ 8.66	$ 9.30	1	$ 9.30
842	691	CLAMP REPAIR F.C. 1-1/2 x 6IN - 244-00019006-000 (S07-B11)	244-00019006-000	$ 28.80	1	$ 28.80	$ 31.00	1	$ 31.00
843	692	CLAMP REPAIR F/C 1-1/2X7-1/2IN - 1.88-1.92 (S07-B12)		$ 28.49	1	$ 28.49	$ 32.55	1	$ 32.55
844	693	CLAMP REPAIR H/C 2 X 3 IN SS - 245-00023803-0 (S07-B15)	245-00023803-000	$ 5.14	1	$ 5.14	$ 5.60	1	$ 5.60
845	694	CLAMP REPAIR 2 x 3IN SS FULLCIRCLE #244-00023803-000 *6 PER BX*(S07-I	244-00023803-000	$ 15.90	1	$ 15.90	$ 17.10	1	$ 17.10
846	695	CLAMP REPAIR 2 X 6 IN SS - 245-00023806-0 (S07-B17)	245-00023806-000	$ 9.73	1	$ 9.73	$ 10.50	1	$ 10.50
847	696	CLAMP REPAIR F/C 2 X 6 IN SS - 244-00023806-000 (S07-B18)	244-00023806-000	$ 29.55	1	$ 29.55	$ 31.80	1	$ 31.80

SUPPLIERS FOR WATER AND SEWER PRODUCTS
BID TABULATION
E-BID #20120009

	A	B	E	G	H	I	J	K	L
1		**Company Name:**		**HD WATERWORKS**			**FERGUSON WATERWORKS**		
2	Item	Item Description	Mfg. Part No.	Unit Price	Yrly Qty Est	Total	Unit Price	Yrly Qty Est	Total
848	697	CLAMP REPAIR 2 X 7-1/2 IN SS - 2.35-2.63 (S07-B19)		$ 28.09	1	$ 28.09	$ 35.89	1	$ 35.89
849	698	CLAMP REPAIR 2 X 12 IN SS - 245-00023812-0 (S07-B20)	245-00023812-000	$ 18.51	1	$ 18.51	$ 19.90	1	$ 19.90
850	699	CLAMP REPAIR F/C 2 X 12-1/2 IN - 2.35-2.63 (S07-B21)		$ 51.62	1	$ 51.62	$ 53.40	1	$ 53.40
851	700	CLAMP REPAIR S/B 3 X 12-1/2 IN - 226-00035012-000 (S07-B23)	226-00035012-000	$ 57.32	1	$ 57.32	$ 59.43	1	$ 59.43
852	701	CLAMP REPAIR 3 x 15IN S.S. - 3.46-3.70 FULL CIRCLE (S07-B24)		$ 68.05	1	$ 68.05	$ 73.01	1	$ 73.01
853	703	CLAMP REPAIR S/B 4X12-1/2IN SS - 4.74-5.14 (S07-C03)		$ 64.37	1	$ 64.37	$ 67.78	1	$ 67.78
854	704	CLAMP REPAIR S/B 4 X 15 IN SS - 4.95-5.35 (S07-C04)		$ 78.41	1	$ 78.41	$ 150.00	1	$ 150.00
855	705	CLAMP REPAIR S/B 4x15IN SS - 4.45-4.73 (S07-C05)		$ 74.71	4	$ 298.84	$ 74.83	4	$ 299.32
856	706	CLAMP REPAIR S/B 4x15IN SS - O.D.RANGE 4.74-5.14 (S07-C06)		$ 77.65	1	$ 77.65	$ 79.12	1	$ 79.12
857	707	CLAMP REPAIR S/B 6 X 7-1/2 IN - 6.56-6.96 (S07-C07)		$ 45.36	1	$ 45.36	$ 49.87	1	$ 49.87
858	709	CLAMP REPAIR 6 X 15IN SINGLE BAND - 6.84-7.24 FORD SS (S07-C10)		$ 78.16	4	$ 312.64	$ 96.74	4	$ 386.96
859	710	CLAMP REPAIR 6x15IN 7.05-7.45 #226-071015-000 (S07-C11)	226-071015-000	$ 87.28	1	$ 87.28	$ 93.80	1	$ 93.80
860	711	SLEEVE 6X6X6 TAPPING (S07-C12)		$ 568.75	1	$ 568.75	$ 477.54	1	$ 477.54
861	712	SLEEVE 8X6X8 TAPPING 8.63-9.05 - FORD FAST-905X6 (S07-C13)	905X6	$ 574.88	1	$ 574.88	$ 482.62	1	$ 482.62
862	713	CLAMP REPAIR D/B 8 X 10 IN SS - 8.99-9.39 (S07-C14)		$ 73.38	1	$ 73.38	$ 98.50	1	$ 98.50
863	714	CLAMP REPAIR S/B 8 X 15 IN SS - 8.54-8.94 (S07-C15)		$ 102.77	1	$ 102.77	$ 109.51	1	$ 109.51
864	715	CLAMP REPAIR 8x15IN 8.99-9.39 - #226-090515-000 (S07-C16)	226-090515-000	$ 105.81	1	$ 105.81	$ 109.51	1	$ 109.51
865	717	CLAMP REPAIR S/B 8 X 15 IN SS - FORD F1-967X15 (S07-C17)	967X15	$ 86.60	1	$ 86.60	$ 112.13	1	$ 112.13
866	718	CLAMP REPAIR S/B SS 10 X 15 9.70-10.10 (S07-D01)		$ 120.64	1	$ 120.64	$ 112.13	1	$ 112.13
867	719	CLAMP REPAIR D/B 10 X 15 IN SS - 10.70-11.50 D/B (S07-D02)		$ 169.17	1	$ 169.17	$ 191.80	1	$ 191.80
868	720	CLAMP REPAIR S/B 10 X 16 IN SS - 11.04-11.44 S/B (S07-D03)		$ 132.13	1	$ 132.13	$ 141.35	1	$ 141.35
869	721	CLAMP REPAIR D/B 10" X 15 " SS - 11.60-12.40 (S07-D04)		$ 190.32	1	$ 190.32	$ 191.80	1	$ 191.80
870	722	CLAMP REPAIR S/B 12 X 12-1/2IN - 14.00-14.40 S/B (S07-D05)		$ 127.82	1	$ 127.82	$ 137.30	1	$ 137.30
871	723	CLAMP REPAIR D/B 12 X 15 IN SS - 12.70-13.50 D/B (S07-D06)		$ 191.25	1	$ 191.25	$ 209.65	1	$ 209.65
872	724	CLAMP REPAIR S/B 12 X 15 13.10-13.50 226-00132015000 (S07-D07)	226-00132015000	$ 152.25	1	$ 152.25	$ 160.97	1	$ 160.97
873	725	CLAMP REPAIR D/B 12 X 15 IN SS - 13.65-14.45 D/B (S07-D08)		$ 191.25	1	$ 191.25	$ 209.65	1	$ 209.65
874	726	CLAMP REPAIR S/B 12 X 15 IN SS - 14.00-14.40 S/B (S07-D09)		$ 159.42	1	$ 159.42	$ 165.11	1	$ 165.11
875	728	CLAMP REPAIR D/B 16 X 15 IN SS - 17.15-17.90 (S07-D10)		$ 252.33	1	$ 252.33	$ 313.95	1	$ 313.95
876	729	CLAMP REPAIR D/B 16 X 15 IN SS - 18.46-19.21 (S07-D11)		$ 413.25	1	$ 413.25	$ 330.79	1	$ 330.79
877	730	CLAMP REPAIR D/B 16 X 20IN SS - 17.15-17.90 (S07-D12)		$ 460.85	1	$ 460.85	$ 425.04	1	$ 425.04
878	731	CLAMP REPAIR D/B 18 X 15IN SS - 18.46-19.21 (S07-E01)		$ 352.95	1	$ 352.95	$ 330.79	1	$ 330.79
879	732	CLAMP REPAIR D/B 18 X 15IN SS 19.23-19.98 228-20192315-000 (S07-E03)	228-20192315-000	$ 358.18	1	$ 358.18	$ 330.90	1	$ 330.90
880	733	CLAMP REPAIR D/B 20 X 30IN SS - 21.52-22.27 (S07-E04)		$ 777.84	1	$ 777.84	$ 717.85	1	$ 717.85

SUPPLIERS FOR WATER AND SEWER PRODUCTS
BID TABULATION
E-BID #20120009

	A	B	E	G	H	I	J	K	L
1		**Company Name:**		**HD WATERWORKS**			**FERGUSON WATERWORKS**		
2	**Item**	**Item Description**	**Mfg. Part No.**	**Unit Price**	**Yrly Qty Est**	**Total**	**Unit Price**	**Yrly Qty Est**	**Total**
881	**789**	COUPLING 4 FLG ADAP.4.74-4.90 - 912-00048004-000 (S08-D07)	912-00048004-000	$ 83.92	1	$ 83.92	$ 87.71	1	$ 87.71
882	**799**	COUPLING 10IN QUANTUM - 10.64-11.97 461-10641197 (S08-D16)	461-10641197	$ 170.67	1	$ 170.67	$ 105.00	1	$ 105.00
883	**801**	COUPLING 10IN D/I 11.55-12.12 - D/I (S08-E02)		$ 296.39	1	$ 296.39	$ 105.00	1	$ 105.00
884	**805**	COUPLING 12IN D/I 13.92-14.26 - D/I (S08-E05)		$ 16.31	1	$ 16.31	$ 130.00	1	$ 130.00
885	**838**	CLAMP 4IN BELL JOINT LEAK-4.80 - 274-00000480-000 (S09-E01)	274-00000480-000	$ 80.15	1	$ 80.15	$ 60.39	1	$ 60.39
886	**839**	CLAMP 6IN BELL JOINT LEAK-6.90 - 274-00000690-000 (S09-E02)	274-00000690-000	$ 88.27	1	$ 88.27	$ 66.50	1	$ 66.50
887	**840**	CLAMP 8IN BELL JOINT LEAK - 9.05-9.30 (S09-E03)		$ 121.96	1	$ 121.96	$ 92.00	1	$ 92.00
888	**841**	CLAMP 10IN BELL JOINT LEAK - 11.10-11.40 (S09-E04)		$ 153.24	1	$ 153.24	$ 115.33	1	$ 115.33
889	**842**	CLAMP 12IN BELL JOINT LEAK - 13.20-13.50 (S09-E05)		$ 165.75	1	$ 165.75	$ 125.11	1	$ 125.11
890	**843**	CLAMP 16IN BELL JOINT LEAK - 17.40-17.80 (S09-E07)		$ 258.82	1	$ 258.82	$ 277.93	1	$ 277.93
891	**844**	CLAMP 18IN BELL JOINT LEAK - 19.50-19.92 (S09-E08)		$ 359.66	1	$ 359.66	$ 386.21	1	$ 386.21
892	**1461**	COUPLING 8IN MAXI-FIT - 8.59-9.25 (S08-D15)		$ 140.88	1	$ 140.88	$ 250.00	1	$ 250.00
893	**3541**	CLAMP REPAIR F/C 1-1/2X 12-1/2 - 1.88-1.92 (S07-B13)		$ 57.59	1	$ 57.59	$ 62.00	1	$ 62.00
894	**3542**	CLAMP REPAIR F/C 1-1/2 X 15 IN - 1.88-1.92 n/l/a (S07-B14)		$ 57.59	1	$ 57.59	$ 75.00	1	$ 75.00
895	**3543**	CLAMP REPAIR F/C 2 X 15 IN SS - 2.35-2.63 (S07-B22)		$ 59.36	1	$ 59.36	$ 67.00	1	$ 67.00
896	**4116**	COUPLING 6IN QUANTUM 6.54-7.65 PART #46106300740 (S08-D10)	46106300740	$ 181.91	4	$ 727.64	$ 104.52	4	$ 418.08
897	**5023**	COUPLING 8IN QUANTUM 8.54-9.85 PN #461-08540960-000 (S08-D14)	461-08540960-000	$ 110.93	1	$ 110.93	$ 119.12	1	$ 119.12
898	**5045**	COUPLING 4IN QUANTUM 4.46-5.60 PN=461-04290535-000 (S08-D08)	461-04290535-000	$ 75.41	11	$ 829.51	$ 81.00	11	$ 891.00
899	**5139**	CLAMP REPAIR S/B 6.56-6.96 226-066307-000 SM/BL (S07-C08)	226-066307-000	$ 45.36	1	$ 45.36	$ 51.09	1	$ 51.09
900	**5517**	COUPLING 12IN QUAN 12.75-14.40 - 461-1275144 0000 (S08-E03)	461-1275144 0000	$ 183.46	1	$ 183.46	$ 232.40	1	$ 232.40
901	**5606**	CLAMP REPAIR D/B 16 X 15 IN SS - 263-171515-000 (S07-E02)	263-171515-000	$ 385.60	1	$ 385.60	$ 313.95	1	$ 313.95
902	**5769**	CLAMP REPAIR 6x15IN SINGLE BAND - 6.56-6.96 226-066315-000 (S07-C0	226-066315-000	$ 82.23	1	$ 82.23	$ 87.93	1	$ 87.93
903	**5833**	COUPLING 16IN REPAIR HYMAX		$ 865.00	1	$ 865.00	$ 1,015.60	1	$ 1,015.60
904	**5907**	COUPLING 16 IN MAXI-FIT - 74MFC1728 (S09-E09)	74MFC1728	$ 414.17	1	$ 414.17	$ 1,015.60	1	$ 1,015.60
905	**5940**	CLAMP 20" BELL JOINT LEAK CLAMP SMITH BLAIR # 274-2160-000 (S07-E05	274-2160-000	$ 417.67	1	$ 417.67	$ 448.50	1	$ 448.50
906	**5941**	CLAMP 24" BELL JOINT LEAK CLAMP SMITH BLAIR# 274-2580-000 (S07-E06	274-2580-000	$ 475.68	1	$ 475.68	$ 510.79	1	$ 510.79
907	**5942**	CLAMP 3/4" X 3" FULL CIRCLE 244-008803-000 *16 PER BX* (S07-C01)	244-008803-000	$ 12.99	25	$ 324.75	$ 13.95	25	$ 348.75
908	**5943**	CLAMP 3/4"X 6" FULL CIRCLE 244-008806-001 (S07-C02)	244-008806-001	$ 27.63	1	$ 27.63	$ 29.67	1	$ 29.67
909	**5962**	GASKET FOR 12" COUPLING #33820 BLUE (S11-C13)		$ 13.76	1	$ 13.76	$ 20.00	1	$ 20.00
910	**5976**	COUPLING HYMAX 6IN 6.42-7.68 (S08-D11)		$ 187.83	2	$ 375.66	$ 220.00	2	$ 440.00
911	**6094**	COUPLING 4" 4.22-5.60 #242-0550 (S08-D09)	242-0550	$ 193.07	4	$ 772.28	$ 224.00	4	$ 896.00
912	**6095**	COUPLING 6" 6.28-7.80 #242-0760 (S08-D12)	242-0760	$ 249.85	2	$ 499.70	$ 289.00	2	$ 578.00
913	**6096**	COUPLING 8" 8.40-9.75 #242-0960 (S08-D13)	242-0960	$ 288.46	2	$ 576.92	$ 334.00	2	$ 668.00

SUPPLIERS FOR WATER AND SEWER PRODUCTS
BID TABULATION
E-BID #20120009

	A	B	E	G	H	I	J	K	L
1		Company Name:		HD WATERWORKS			FERGUSON WATERWORKS		
2	Item	Item Description	Mfg. Part No.	Unit Price	Yrly Qty Est	Total	Unit Price	Yrly Qty Est	Total
914	6097	COUPLING 10" 10.50-12.12 #242-1200 (S08-D17)	242-1200	$ 371.37	1	$ 371.37	$ 430.00	1	$ 430.00
915	6098	COUPLING 12" 12.50-14.38 #242-1430 (S08-E04)	242-1430	$ 448.60	1	$ 448.60	$ 526.00	1	$ 526.00
916	6099	COUPLING 16" 17.32-19.20 #242-1920 (S08-E06)	242-1920	$ 925.58	1	$ 925.58	$ 1,075.00	1	$ 1,075.00
917		**14. SUBTOTAL**				**$ 23,698.05**			$ 25,193.06
918		**15. SCH 80 PIPE & ALL FITTINGS / SPEARS OR APPROVED EQUAL**							
919	557	COUPLING 6" SxS SCH80 PVC - 829-060 *SPEARS* (S17-A03)	829-060	$ 36.17	8	$ 289.36	$ 20.72	8	$ 165.76
920	669	REDUCER 1 1/4" X 1" SCH80 837-168 *25 BX* (S16-D22)	837-168	$ 2.81	4	$ 11.24	$ 1.40	4	$ 5.60
921	1026	REDUCER BUSHING 1 X 1/4" MXF SCH80 839-128 25/bx *SPEARS* (S16-E:	839-128	$ 4.69	1	$ 4.69	$ 2.68	1	$ 2.68
922	1028	REDUCER BUSHING 1 X 1 1/4" MXF SCH80 839-168 25/bx *SPEARS* (S16	839-168	$ 3.97	1	$ 3.97	$ 2.28	1	$ 2.28
923	1053	NIPPLE 1-1/2 x 8IN TBE SCH80 - 886-080 *SPEARS* EA 25/BOX (S16-D01)	886-080	$ 2.17	35	$ 75.95	$ 2.46	35	$ 86.10
924	1059	NIPPLE 3/4 X CL TBE SCH80 PVC - PART #207-016 (S16-E33)	207-016	$ 0.45	1	$ 0.45	$ 0.25	1	$ 0.25
925	1060	NIPPLE 3/4 X 2IN TBE SCH80 PVC - PART #207-020 (S16-E34)	207-020	$ 0.45	2	$ 0.90	$ 0.25	2	$ 0.50
926	1061	NIPPLE 3/4 X 3IN TBE SCH80 PVC - PART #207-030 (S16-E32)	207-030	$ 0.52	1	$ 0.52	$ 0.51	1	$ 0.51
927	1062	NIPPLE 3/4 X 4IN TBE SCH80 PVC - PART #207-040 (S16-E31)	207-040	$ 0.60	1	$ 0.60	$ 0.66	1	$ 0.66
928	1063	NIPPLE 3/4 X 6IN TBE SCH80 PVC - PART #207-060 (S16-E30)	207-060	$ 0.89	1	$ 0.89	$ 0.96	1	$ 0.96
929	1064	NIPPLE 1IN X CL SCH80 PVC 884-005 *SPEARS* (S16-E05)	884-005	$ 0.60	15	$ 9.00	$ 0.66	15	$ 9.90
930	1065	NIPPLE 1IN X 2IN TBE SCH80 PVC - PART #210-020 (S16-D15)	210-020	$ 0.67	1	$ 0.67	$ 0.74	1	$ 0.74
931	1066	NIPPLE 1IN X 3IN TBE SCH80 PVC - PART #210-030 (S16-E03)	210-030	$ 0.77	3	$ 2.31	$ 0.84	3	$ 2.52
932	1067	NIPPLE 1IN X 4IN TBE SCH80 PVC - PART #210-040 (S16-D18)	210-040	$ 0.89	1	$ 0.89	$ 0.96	1	$ 0.96
933	1068	COUPLING 1IN SCH80 PVC GRAY - HOSE BARBxHOSE BARB (S16-E02)		$ 0.68	1	$ 0.68	$ 5.00	1	$ 5.00
934	1069	NIPPLE 1-1/4 IN X CL TBE SCH80 - 885-005 *SPEARS* (S16-D09)	885-005	$ 1.26	1	$ 1.26	$ 0.96	1	$ 0.96
935	1070	NIPPLE 1-1/4 X 2IN TBE SCH80 - PART #212-020 (S16-D10)	212-020	$ 1.26	1	$ 1.26	$ 0.99	1	$ 0.99
936	1071	NIPPLE 1-1/4 X 3IN TBE SCH80 - 212-030 (S16-D11)	212-030	$ 1.31	2	$ 2.62	$ 1.13	2	$ 2.26
937	1072	NIPPLE 1-1/2 X 2IN TBE SCH80 - PART #215-020 (S16-C17)	215-020	$ 1.34	1	$ 1.34	$ 1.50	1	$ 1.50
938	1073	NIPPLE 1-1/2 X 3IN TBE SCH80 - PART #215-030 (S16-D02)	215-030	$ 1.53	3	$ 4.59	$ 1.35	3	$ 4.05
939	1074	NIPPLE 1-1/2 X 4IN TBE SCH80 886-040 *SPEARS* (S16-C08)	886-040	$ 1.53	1	$ 1.53	$ 1.47	1	$ 1.47
940	1075	NIPPLE 2IN X CL TBE SCH80 PVC - PART #220-016 (S16-C05)	220-016	$ 1.59	1	$ 1.59	$ 1.39	1	$ 1.39
941	1076	NIPPLE 2IN X 3IN TBE SCH80 PVC 887-030 (S16-C02)	887-030	$ 1.53	4	$ 6.12	$ 1.66	4	$ 6.64
942	1077	NIPPLE 2IN X 4IN TBE SCH80 PVC - 887-040 *SPEARS* (S16-C03)	887-040	$ 1.76	1	$ 1.76	$ 1.93	1	$ 1.93
943	1078	NIPPLE 3IN X CL TBE SCH80 PVC - 889-005 (S16-A08)	889-005	$ 4.66	7	$ 32.62	$ 5.88	7	$ 41.16
944	1079	NIPPLE 4IN X CL TBE SCH80 PVC - 890-005 (S17-A08)	890-005	$ 8.46	1	$ 8.46	$ 9.60	1	$ 9.60
945	1080	ELL 90 1-1/2IN SLIP SCH80 PVC - 806-015 10/BX *SPEARS* (S16-C09)	806-015	$ 3.15	36	$ 113.40	$ 1.80	36	$ 64.80
946	1081	COUPLING 1-1/2IN SxS SCH80 PVC 10/BX 829-015 *SPEARS* (S16-C13)	829-015	$ 4.42	17	$ 75.14	$ 5.54	17	$ 94.18

SUPPLIERS FOR WATER AND SEWER PRODUCTS
BID TABULATION
E-BID #20120009

	A	B	E	G	H	I	J	K	L
1		**Company Name:**		**HD WATERWORKS**			**FERGUSON WATERWORKS**		
2	**Item**	**Item Description**	**Mfg. Part No.**	**Unit Price**	**Yrly Qty Est**	**Total**	**Unit Price**	**Yrly Qty Est**	**Total**
947	**1082**	COUPLING 1-1/2IN FPTxFPT SCH80 - PVC #830-015 *SPEARS* (S16-C10)	830-015	$ 9.13	1	$ 9.13	$ 5.23	1	$ 5.23
948	**1083**	TEE 1-1/2IN SLIP SCH80 PVC - 801-015 *SPEARS* (S16-C15)	801-015	$ 10.87	12	$ 130.44	$ 6.22	12	$ 74.64
949	**1084**	UNION 2IN SCH80 PVC FPTxFPT 858-020 5/BX *SPEARS* (S16-B14)	858-020	$ 31.16	2	$ 62.32	$ 17.84	2	$ 35.68
950	**1085**	ELL 90 2-1/2IN SxS SCH80 PVC - PART #806-025 *SPEARS* (S16-B07)	806-025	$ 8.93	1	$ 8.93	$ 5.11	1	$ 5.11
951	**1086**	FLANGE 1-1/2IN SLIP FF SCH80 - 854-015 4-HOLE *SPEARS* (S16-C12)	854-015	$ 7.33	12	$ 87.96	$ 4.20	12	$ 50.40
952	**1087**	FLANGE 2IN SLIP FF SCH80 - 854-020 PVC 4-HOLE 10/BX *SPEARS* (S16-C01)	854-020	$ 9.76	15	$ 146.40	$ 5.59	15	$ 83.85
953	**1088**	FLANGE 3 IN SWIVEL SLIP SCH80 - 854-030 4 HOLE GRAY *SPEARS* (S16-A06)	854-030	$ 16.65	1	$ 16.65	$ 9.54	1	$ 9.54
954	**1089**	FLANGE 2-1/2IN SLIP FF SCH80 PVC 854-025 *SPEARS* (S16-B05)	854-025	$ 15.07	1	$ 15.07	$ 8.63	1	$ 8.63
955	**1091**	FLANGE 4IN SWIVEL SLIP SCH80 - 854-040 8 HOLE GRAY *SPEARS* (S17-A06)	854-040	$ 21.07	31	$ 653.17	$ 12.06	31	$ 373.86
956	**1092**	FLANGE 6IN SWIVEL SLIP SCH80 5/bx- 854-060 8-HOLE *SPEARS* (S17-A02)	854-060	$ 33.13	71	$ 2,352.23	$ 18.98	71	$ 1,347.58
957	**1150**	TEE 1" FIPT X FIPT SCH80 805-010 15/bx *SPEARS* (S16-E39)	805-010	$ 8.57	13	$ 111.41	$ 4.90	13	$ 63.70
958	**1151**	UNION 1" THREADED FIPT W/VITON SEALS SCH80 8058-010 15/bx *SPEARS* (S16-E40)	8058-010	$ 8.57	3	$ 25.71	$ 4.35	3	$ 13.05
959	**1156**	ADAPTER 1" M X HOSE BARB SCH80 1436-010 25/bx *SPEARS* (S16-E41)	1436-010	$ 0.43	27	$ 11.61	$ 0.70	27	$ 18.90
960	**1393**	ADAPTER MALE 1-1/4IN SCH80 PVC 10/bx- 836-012 *SPEARS* (S16-D07)	836-012	$ 5.05	434	$ 2,191.70	$ 3.68	434	$ 1,597.12
961	**1394**	ELL 45 DEG. 2-1/2IN SxS SCH80 - PVC 817-025 GRAY *SPEARS* (S16-B06)	817-025	$ 18.91	1	$ 18.91	$ 10.83	1	$ 10.83
962	**1395**	PIPE 2IN SCH80 PVC GRAY - 20FT LENGTHS (PR1-C01)		$ 1.81	121	$ 219.01	$ 1.35	121	$ 163.35
963	**1396**	PIPE 2-1/2IN SCH80 PVC GRAY - 20FT LENGTHS (PR1-I02)		$ 3.04	1	$ 3.04	$ 0.98	1	$ 0.98
964	**1408**	COUPLING 2IN SXS SCH80 PVC - 829-020 20/BX *SPEARS* (S16-B13)	829-020	$ 4.75	57	$ 270.75	$ 2.72	57	$ 155.04
965	**1409**	COUPLING 2-1/2IN SXS SCH80 PVC - 829-025 10/bx *SPEARS* (S16-B03)	829-025	$ 11.69	1	$ 11.69	$ 6.70	1	$ 6.70
966	**1410**	ELL 90 2IN SCH80 SxS PVC GRAY 25/bx- 806-020 *SPEARS* (S16-B09)	806-020	$ 3.82	64	$ 244.48	$ 2.18	64	$ 139.52
967	**1411**	ELL 45 DEG. 2IN SxS SCH80 PVC - 817-020 10/BX *SPEARS* (S16-B11)	817-020	$ 9.01	23	$ 207.23	$ 5.16	23	$ 118.68
968	**1412**	ADAPTER MALE 2IN MPTxS SCH80 - 836-020 10/bx *SPEARS* (S16-B16)	836-020	$ 10.49	79	$ 828.71	$ 6.01	79	$ 474.79
969	**1413**	ADAPTER MALE 2-1/2IN SCH80 PVC - 836-025 5/BX *SPEARS* (S16-B02)	836-025	$ 11.92	12	$ 143.04	$ 6.83	12	$ 81.96
970	**1414**	ADAPTER FEMALE 2IN SCH80 PVC - 835-020 10/bx *SPEARS* (S16-B12)	835-020	$ 13.75	36	$ 495.00	$ 7.88	36	$ 283.68
971	**1415**	ADAPTER FEMALE 2-1/2IN SCH80 - 835-025 5/BX *SPEARS* (S16-B01)	835-025	$ 21.71	6	$ 130.26	$ 12.44	6	$ 74.64
972	**1416**	WYE 2IN SxS SCH80 PVC - 875-020 *SPEARS* (S16-B08)	875-020	$ 32.76	1	$ 32.76	$ 18.77	1	$ 18.77
973	**1558**	ELL 90 6IN SXS SCH80 PVC - 806-060 *SPEARS* (S17-A01)	806-060	$ 43.43	11	$ 477.73	$ 24.00	11	$ 264.00
974	**1763**	COUPLING 4IN SxS SCH80 PVC - 829-040 *SPEARS* (S17-A07)	829-040	$ 16.81	6	$ 100.86	$ 9.62	6	$ 57.72
975	**1764**	ELL 90 4IN SxS SCH80 PVC - 806-040 *SPEARS* (S17-A05)	806-040	$ 15.26	15	$ 228.90	$ 8.74	15	$ 131.10
976	**1827**	COUPLING 2IN FPT X FPT SCH80 PVC 830-020 10/BX *SPEARS* (S16-B18)	830-020	$ 9.58	1	$ 9.58	$ 5.49	1	$ 5.49
977	**1970**	PLUG 1IN THRD SCH80 PVC - 850-010 *SPEARS* (S16-D17)	850-010	$ 2.32	1	$ 2.32	$ 1.33	1	$ 1.33
978	**2260**	REDUCER 1 X 1/2IN SxS SCH80-837-130 50/bx *SPEARS* (S16-E08)	837-130	$ 1.78	36	$ 64.08	$ 1.02	36	$ 36.72

SUPPLIERS FOR WATER AND SEWER PRODUCTS
BID TABULATION
E-BID #20120009

	A	B	E	G	H	I	J	K	L
1		Company Name:		HD WATERWORKS			FERGUSON WATERWORKS		
2	Item	Item Description	Mfg. Part No.	Unit Price	Yrly Qty Est	Total	Unit Price	Yrly Qty Est	Total
979	2275	TEE 1/2IN SLIP SCH80 PVC - 801-005 25/bx *SPEARS* (S16-E25)	801-005	$ 3.02	16	$ 48.32	$ 1.73	16	$ 27.68
980	2276	TEE 3/4IN SLIP SCH80 PVC - 801-007 *SPEARS* (S16-E06)	801-007	$ 3.16	21	$ 66.36	$ 1.82	21	$ 38.22
981	2277	TEE 1IN SLIP SCH80 PVC - 801-010 15/bx *SPEARS* (S16-E01)	801-010	$ 3.95	2	$ 7.90	$ 2.27	2	$ 4.54
982	2278	ELL 90 DEG.1/2IN SxS SCH80 PVC 20/BX 806-005 *SPEARS* (S16-E20)	806-005	$ 1.07	34	$ 36.38	$ 0.61	34	$ 20.74
983	2280	ELL 90 1IN SxS SCH80 PVC - 806-010 25/BX *SPEARS* (S16-D16)	806-010	$ 2.20	31	$ 68.20	$ 1.26	31	$ 39.06
984	2281	TEE 1-1/4IN SxS SCH80 PVC - 801-012 10/bx *SPEARS* (S16-D06)	801-012	$ 10.87	44	$ 478.28	$ 6.22	44	$ 273.68
985	2282	ELL 45 DEG.1/2IN SxS SCH80 PVC - 817-005 *SPEARS* (S16-E27)	817-005	$ 2.01	22	$ 44.22	$ 1.16	22	$ 25.52
986	2283	ELL 45 DEG.3/4IN SxS SCH80 PVC - 817-007 *SPEARS* (S16-E12)	817-007	$ 3.78	8	$ 30.24	$ 1.77	8	$ 14.16
987	2284	ELL 45 DEG. 1IN SxS SCH80 PVC - 817-010 *SPEARS* (S16-D20)	817-010	$ 4.61	9	$ 41.49	$ 2.65	9	$ 23.85
988	2285	COUPLING 1/2IN SxS SCH80 PVC - 829-005 *SPEARS* (S16-E15)	829-005	$ 1.93	19	$ 36.67	$ 1.11	19	$ 21.09
989	2286	COUPLING 3/4IN SxS SCH80 PVC - 829-007 *SPEARS* (S16-E24)	829-007	$ 2.62	11	$ 28.82	$ 1.50	11	$ 16.50
990	2287	COUPLING 1IN SxS SCH-80 PVC - 829-010 25/BX *SPEARS* (S16-D21)	829-010	$ 2.69	24	$ 64.56	$ 1.54	24	$ 36.96
991	2288	ADAPTER FEMALE 1/2IN SCH80 PVC - 835-005 *SPEARS* (S16-E19)	835-005	$ 1.82	15	$ 27.30	$ 1.10	15	$ 16.50
992	2289	ADAPTER FEMALE 3/4IN SCH80 PVC - 835-007 25/bx *SPEARS* (S16-E11)	835-007	$ 2.69	14	$ 37.66	$ 1.51	14	$ 21.14
993	2290	ADAPTER FEMALE 1IN SCH80 PVC - 835-010 *SPEARS* (S16-D19)	835-010	$ 3.97	14	$ 55.58	$ 2.27	14	$ 31.78
994	2291	ADAPTER FEMALE 1-1/2IN SCH80 - 835-015 *SPEARS* (S16-D03)	835-015	$ 7.88	11	$ 86.68	$ 4.51	11	$ 49.61
995	2292	ADAPTER MALE 1/2IN SCH80 PVC - 836-005 *SPEARS* (S16-E18)	836-005	$ 2.26	36	$ 81.36	$ 1.29	36	$ 46.44
996	2293	ADAPTER MALE 3/4IN SCH80 PVC - 836-007 *SPEARS* (S16-E10)	836-007	$ 2.50	24	$ 60.00	$ 1.43	24	$ 34.32
997	2294	ADAPTER MALE 1IN SCH80 PVC - 836-010 20/BX *SPEARS* (S16-E04)	836-010	$ 4.32	86	$ 371.52	$ 2.48	86	$ 213.28
998	2295	ADAPTER MALE 1-1/2IN SCH80 PVC - 836-015 10/BX *SPEARS* (S16-D04)	836-015	$ 7.26	958	$ 6,955.08	$ 4.16	958	$ 3,985.28
999	2296	REDUCER 3/4 x 1/2IN SCH80 PVC- 837-101 50/bx *SPEARS* (S16-E14)	837-101	$ 0.62	15	$ 9.30	$ 0.35	15	$ 5.25
1000	2297	REDUCER 1x3/4IN SxS SCH80 PVC 50/BX 837-131 *SPEARS* (S16-E09)	837-131	$ 1.78	31	$ 55.18	$ 1.02	31	$ 31.62
1001	2298	REDUCER 1-1/2x3/4IN SxS SCH80 - 837-210 *SPEARS* (S16-E26)	837-210	$ 3.82	12	$ 45.84	$ 2.18	12	$ 26.16
1002	2299	REDUCER 2x 3/4IN SxS SCH80 PVC - 837-248 *SPEARS* (S16-C06)	837-248	$ 5.44	2	$ 10.88	$ 3.12	2	$ 6.24
1003	2300	REDUCER 2 X 1IN SxS SCH80 PVC - 837-249 *SPEARS* (S16-E22)	837-249	$ 5.44	8	$ 43.52	$ 3.12	8	$ 24.96
1004	2301	REDUCER 2 X 1-1/2IN SxS SCH80 - 837-251 10/BX *SPEARS* (S16-E23)	837-251	$ 5.44	64	$ 348.16	$ 3.12	64	$ 199.68
1005	2340	TEE 2IN SLIP SCH80 PVC - 801-020 *SPEARS* (S16-B10)	801-020	$ 13.58	13	$ 176.54	$ 7.78	13	$ 101.14
1006	2341	UNION 1-1/2IN SxS SCH80 PVC - 8057-015 10/BX *SPEARS* (S16-C14)	8057-015	$ 12.95	62	$ 802.90	$ 7.41	62	$ 459.42
1007	2444	UNION 1IN SxS SCH80 PVC - 8057-010 (S16-D14)	8057-010	$ 5.75	23	$ 132.25	$ 3.29	23	$ 75.67
1008	2463	UNION 1/2IN SxS SCH 80 8057-005 20/BX (S16-E36)	8057-005	$ 3.97	6	$ 23.82	$ 2.27	6	$ 13.62
1009	2464	UNION 3/4IN SxS SCH80 PVC - 34P8U 8057-007 (S16-E35)	8057-007	$ 5.04	11	$ 55.44	$ 2.89	11	$ 31.79
1010	2466	UNION 2IN SxS SCH80 PVC 2P8U 857-020 5/BX *SPEARS* (S16-C04)	857-020	$ 17.55	24	$ 421.20	$ 8.70	24	$ 208.80
1011	2545	ELL 90 3/4IN SCH80 PVC GRAY-806-007 20/bx *SPEARS* (S16-E07)	806-007	$ 1.36	23	$ 31.28	$ 0.78	23	$ 17.94

SUPPLIERS FOR WATER AND SEWER PRODUCTS
BID TABULATION
E-BID #20120009

	A	B	E	G	H	I	J	K	L
1		Company Name:		HD WATERWORKS			FERGUSON WATERWORKS		
2	Item	Item Description	Mfg. Part No.	Unit Price	Yrly Qty Est	Total	Unit Price	Yrly Qty Est	Total
1012	2546	ELL 45 DEG 1-1/2IN SxS SCH80 - 817-015 *SPEARS* (S16-C16)	817-015	$ 6.95	15	$ 104.25	$ 3.98	15	$ 59.70
1013	2588	COUPLING 1-1/4IN SxS SCH80 PVC - 829-012 10/BX *SPEARS* (S16-D08)	829-012	$ 4.10	111	$ 455.10	$ 2.35	111	$ 260.85
1014	2846	ADAPTER FEMALE 1-1/4IN SCH80 835-012 10/BX (S16-D12)	835-012	$ 6.43	7	$ 45.01	$ 3.68	7	$ 25.76
1015	3043	PIPE 3/4IN SCH80 PVC - 20FT LENGTHS GRAY (PR1-E01)		$ 0.58	141	$ 81.78	$ 0.50	141	$ 70.50
1016	3044	PIPE 1IN SCH80 PVC - GRAY 20FT LENGTHS (PR1-F02)		$ 0.84	91	$ 76.44	$ 0.75	91	$ 68.25
1017	3202	PIPE 1-1/2IN SCH80 PVC (PR1-G01)		$ 1.29	342	$ 441.18	$ 1.15	342	$ 393.30
1018	3210	ELL 90 1-1/2IN SxF SCH80 PVC - 807-015 *SPEARS* (S16-C11)	807-015	$ 7.36	2	$ 14.72	$ 4.22	2	$ 8.44
1019	3211	ELL 90 2IN SxF SCH80 PVC - 807-020 *SPEARS* (S16-B15)	807-020	$ 9.54	1	$ 9.54	$ 5.46	1	$ 5.46
1020	3471	PIPE 1-1/4IN SCH80 PVC GRAY - 20FT LENGTHS (PR1-F01)		$ 1.17	479	$ 560.43	$ 1.00	479	$ 479.00
1021	3802	CROSS 1-1/2IN SLIP SCH80 PVC PART #820-015 (S16-C07)	820-015	$ 23.70	1	$ 23.70	$ 13.57	1	$ 13.57
1022	5018	NIPPLE 2 1/2 X CL TBE SCH80 PVC (S16-B04)		$ 4.33	1	$ 4.33	$ 2.50	1	$ 2.50
1023	5155	PIPE 1IN CPVC SCH80 20FT LNG - PART #3670-010 (PR1-H02)		$ 2.20	5	$ 11.00	$ 1.90	5	$ 9.50
1024	5156	PIPE 3/4IN CPVC SCH80 20FT LNG - 3670-007 (PR1-H03)		$ 0.83	11	$ 9.13	$ 1.20	11	$ 13.20
1025	5176	ELL 90 1-1/4IN SCH80 PVC SxS - #806-012 10/bx *SPEARS* (S16-D05)	806-012	$ 2.95	145	$ 427.75	$ 1.73	145	$ 250.85
1026	5177	ELL 45 DEG.1-1/4IN SXS SCH80 - PVC PART #817-012 *SPEARS* (S16-D13)	817-012	$ 5.87	1	$ 5.87	$ 3.37	1	$ 3.37
1027	5196	PIPE 4IN SCH80 PVC 20FT LENGTH (PR2-C01)		$ 5.37	121	$ 649.77	$ 4.70	121	$ 568.70
1028	5225	ELL 3IN 90 SCH80 SxS PVC - 806-030 *SPEARS* (S16-A02)	806-030	$ 9.44	1	$ 9.44	$ 5.74	1	$ 5.74
1029	5226	UNION 3IN SCH80 SxS VITON O-RG - 857-030 *SPEARS* (S16-A07)	857-030	$ 32.67	1	$ 32.67	$ 18.71	1	$ 18.71
1030	5228	ELL 45 DEG. 3IN SXS SCH80 PVC - 817-030 *SPEARS* (S16-A03)	817-030	$ 23.02	1	$ 23.02	$ 13.18	1	$ 13.18
1031	5247	PIPE 1/2IN CPVC SCH80 20FT LNG - 3670-005 (PR1-H04)		$ 2.20	1	$ 2.20	$ 0.93	1	$ 0.93
1032	5250	PIPE 2IN CPVC SCH80 20FT LNG - 3670-020 (PR1-H01)		$ 2.99	21	$ 62.79	$ 4.30	21	$ 90.30
1033	5282	PIPE 3IN SCH80 PVC - 0503080 (PR2-C02)		$ 3.75	1	$ 3.75	$ 3.30	1	$ 3.30
1034	5283	PIPE 6IN SCH80 PVC - 0506080 (PR2-B01)		$ 10.36	211	$ 2,185.96	$ 9.10	211	$ 1,920.10
1035	5284	PIPE 8IN SCH80 PVC - PART #0508080		$ 15.60	1	$ 15.60	$ 13.50	1	$ 13.50
1036	5285	VALVE 1/2IN BALL SCH80 PVC SxS - 2622-005G (S16-E42)	2622-005G	$ 5.05	11	$ 55.55	$ 5.28	11	$ 58.08
1037	5287	REDUCER 1/2 X 1/4IN SxF SCH80 - 838-072 *SPEARS* (S16-E16)	838-072	$ 1.71	11	$ 18.81	$ 1.00	11	$ 11.00
1038	5288	REDUCER 3/4 X 1/4IN SxF SCH80 - 838-098 *SPEARS* (S16-E17)	838-098	$ 1.14	5	$ 5.70	$ 0.70	5	$ 3.50
1039	5289	PIPE 1/2IN SCH80 PVC - 0505080 (PR1-E02)		$ 0.42	111	$ 46.62	$ 0.37	111	$ 41.07
1040	5363	TEE 3IN SxSxS SCH 80 801-030 (S16-A01)	801-030	$ 18.47	1	$ 18.47	$ 10.57	1	$ 10.57
1041	5365	VALVE 3IN BUTTERFLY FLANGED - SCH80 #251311-030	251311-030	$ 408.93	1	$ 408.93	$ 160.00	1	$ 160.00
1042	5366	ELL 3IN 22-1/2 DEG. SCH80		$ 27.14	1	$ 27.14	$ 16.10	1	$ 16.10
1043	5367	COUPLING 3IN SxS SCH80 829-030 5/BX *SPEARS* (S16-A05)	829-030	$ 13.42	2	$ 26.84	$ 7.70	2	$ 15.40
1044	5369	REDUCER 8IN X 6IN SCH80		$ 70.21	1	$ 70.21	$ 35.20	1	$ 35.20

SUPPLIERS FOR WATER AND SEWER PRODUCTS
BID TABULATION
E-BID #20120009

	A	B	E	G	H	I	J	K	L
1		**Company Name:**		**HD WATERWORKS**			**FERGUSON WATERWORKS**		
2	**Item**	**Item Description**	**Mfg. Part No.**	**Unit Price**	**Yrly Qty Est**	**Total**	**Unit Price**	**Yrly Qty Est**	**Total**
1045	**5370**	COUPLING 8IN SxS SCH80		$ 49.23	1	$ 49.23	$ 25.29	1	$ 25.29
1046	**5371**	TEE 4IN SxSxS SCH80 801-040	801-040	$ 21.40	1	$ 21.40	$ 12.26	1	$ 12.26
1047	**5372**	REDUCER 4IN X 1IN SxTHRD SCH80 - 4IN SLIPx1IN THRD		$ 22.76	1	$ 22.76	$ 19.47	1	$ 19.47
1048	**5373**	TEE 8IN W/8IN SPIGOT CLEAN OUT - AND PLUG-SCH80		$ 62.49	1	$ 62.49	$ 221.40	1	$ 221.40
1049	**5385**	ADAPTER 4IN FEMALE SCH80 PVC - PART #835-040 *SPEARS*	835-040	$ 42.00	1	$ 42.00	$ 24.06	1	$ 24.06
1050	**5386**	ELL 45 DEG 4IN SCH80 PVC - PART #817-040 *SPEARS*	817-040	$ 41.45	1	$ 41.45	$ 23.73	1	$ 23.73
1051	**5513**	CROSS 3IN SLIP SCH80		$ 49.91	1	$ 49.91	$ 28.94	1	$ 28.94
1052	**5807**	REDUCER 2IN SLIP X 3/4IN FPT - SCH80 PVC		$ 5.56	1	$ 5.56	$ 2.79	1	$ 2.79
1053	**5819**	ADAPTER 4IN MALE SCH80 836-040 *SPEARS* (S17-A09)	836-040	$ 23.55	11	$ 259.05	$ 13.49	11	$ 148.39
1054	**5824**	REDUCER 2 X 1/2IN SCH80 SxF - PVC BUSHING		$ 5.56	1	$ 5.56	$ 3.30	1	$ 3.30
1055	**6008**	REDUCER 1 1/2 X 1 1/4 SCH80 25/BX 837-212 *SPEARS* (S16-E21)	837-212	$ 3.82	174	$ 664.68	$ 2.24	174	$ 389.76
1056		**15. SUBTOTAL**				**$ 27,905.61**	$ -		**$ 17,919.60**
1057		**16. STAINLESS STEEL**					$ -		
1058	**588**	INSERT 3/4IN FOR POLY TUBING - 51 SS (S06-D01)	51 SS	$ 1.02	52	$ 53.04	$ 1.26	52	$ 65.52
1059	**589**	INSERT 1IN S.S.FOR POLY TUBING - INSERT -52 100/B0X (S06-D03)	52 SS	$ 1.08	1977	$ 2,135.16	$ 1.38	1977	$ 2,728.26
1060	**590**	INSERT 1-1/2IN FOR POLY TUBING - 54 SS (S06-D02)	54 SS	$ 1.49	1	$ 1.49	$ 1.84	1	$ 1.84
1061	**591**	INSERT 2IN SS FOR POLY TUBING - INSERT-55 (S06-D04)	55 SS	$ 1.49	34	$ 50.66	$ 1.90	34	$ 64.60
1062	**1261**	NIPPLE 1 1/4" X CL 316 SS (S10-C17)	316 SS	$ 2.19	11	$ 24.09	$ 2.50	11	$ 27.50
1063	**1696**	PIPE 2IN SCH40 SS 316/316L (PR1-I01)	316 SS	$ 14.65	1	$ 14.65	$ 12.30	1	$ 12.30
1064	**2009**	NIPPLE 2x6 SCHD 40 - 316 S.S. (S15-B28)	316 S.S.	$ 10.78	2	$ 21.56	$ 11.90	2	$ 23.80
1065	**2753**	NIPPLE 2X6IN SCH/40 - 304/SS (S15-B27)	304 S.S.	$ 7.46	1	$ 7.46	$ 8.30	1	$ 8.30
1066	**5917**	NIPPLE 1 1/2 X 3IN S.S. (S15-B29)		$ 4.30	1	$ 4.30	$ 3.40	1	$ 3.40
1067		**16. SUBTOTAL**				**$ 2,312.41**	$ -		**$ 2,935.52**
1068		**17. TAP SADDLES, ALL TYPES / SMITH-BLAIR OR APPROVED EQUAL**							
1069	**746**	SADDLE 2"x1" TAP S/B 2.35-2.56 315-025608-000 (S08-B01)	315-025608-000	$ 19.37	1	$ 19.37	$ 20.80	1	$ 20.80
1070	**747**	SADDLE TAP 3" X 1" S/B 2.97 - 3.54 315-035408-000 (S08-B02)	315-035408-000	$ 20.16	1	$ 20.16	$ 21.65	1	$ 21.65
1071	**748**	SADDLE TAP 3" X 1" D/B 2.97 - 3.54 317-035408-000 (S08-B03)	317-035408-000	$ 34.84	1	$ 34.84	$ 37.41	1	$ 37.41
1072	**749**	SADDLE TAP 3-4" X 2" D/B 3.74-4.13 317-041314-000 (S08-B04)	317-041314-000	$ 39.11	1	$ 39.11	$ 42.00	1	$ 42.00
1073	**750**	SADDLE 4 X 1 TAP S/B 3.74-4.55 315-00045508-000 (S08-B06)	315-00045508-000	$ 24.68	11	$ 271.48	$ 22.22	11	$ 244.42
1074	**754**	SADDLE 4" X 1-1/2" TAP D/B 5.00 - 5.63 317-056312-000 (S08-B08)	317-056312-000	$ 35.99	1	$ 35.99	$ 38.65	1	$ 38.65
1075	**755**	SADDLE 4" X 2" TAP S/B 4.74 - 5.63 315-056314-000 (S08-B09)	315-056314-000	$ 24.41	3	$ 73.23	$ 26.21	3	$ 78.63
1076	**756**	SADDLE TAP 6"x1" S/B 5.94 - 6.90 315-066308-000 *8 PER BX* (S07-D14)	315-066308-000	$ 22.40	171	$ 3,830.40	$ 23.20	171	$ 3,967.20

SUPPLIERS FOR WATER AND SEWER PRODUCTS
BID TABULATION
E-BID #20120009

	A	B	E	G	H	I	J	K	L
1		**Company Name:**		**HD WATERWORKS**			**FERGUSON WATERWORKS**		
2	Item	Item Description	Mfg. Part No.	Unit Price	Yrly Qty Est	Total	Unit Price	Yrly Qty Est	Total
1077	**759**	SADDLE 6 X 1-1/2 TAP S/B 6.84-7.60 315-076012-000 (S08-B10)	315-076012-000	$ 26.67	1	$ 26.67	$ 27.70	1	$ 27.70
1078	**760**	SADDLE 6" X 2" TAP D/B 6.84 - 7.60 317-076014-000 (S08-B12)	317-076014-000	$ 45.52	1	$ 45.52	$ 46.60	1	$ 46.60
1079	**761**	SADDLE 6" X 2" TAP S/B 6.84 - 7.60 315-076014-000 (S08-B11)	315-076014-000	$ 26.67	3	$ 80.01	$ 28.70	3	$ 86.10
1080	**766**	SADDLE 8"x2" TAP SB 8.54 - 10.10 315-00101014-000 (S08-B14)	315-00101014-000	$ 32.11	1	$ 32.11	$ 34.50	1	$ 34.50
1081	**767**	SADDLE 8" X 2" TAP D/B 8.54 - 10.10 317-101014-000 (S08-B15)	317-101014-000	$ 52.99	1	$ 52.99	$ 56.90	1	$ 56.90
1082	**769**	SADDLE 10" X 1-1/2" TAP D/B - 10.75-11.10 317-111012 (S08-C01)	317-111012	$ 61.87	1	$ 61.87	$ 62.00	1	$ 62.00
1083	**770**	SADDLE 10" X 2" TAP D/B 10.64-12.12 317-121214-000 (S08-C02)	317-121214-000	$ 61.87	1	$ 61.87	$ 66.50	1	$ 66.50
1084	**771**	SADDLE 10" X 2" TAP S/B 10.64 - 12.12 315-121214-000 (S08-C03)	315-121214-000	$ 36.06	1	$ 36.06	$ 38.80	1	$ 38.80
1085	**772**	SADDLE 12"x 1" TAP 12.62 - 14.32 SB 315-00143208-000 (S08-C04)	315-00143208-000	$ 34.14	15	$ 512.10	$ 35.80	15	$ 537.00
1086	**773**	SADDLE 12" X 1" TAP D/B 12.62 - 14.32 317-143208-000 (S08-C05)	317-143208-000	$ 62.08	1	$ 62.08	$ 66.70	1	$ 66.70
1087	**774**	SADDLE 12" X 1-1/2" TAP D/B 12.62 - 14.32 317-143212-000 (S08-C06)	317-143212-000	$ 66.48	1	$ 66.48	$ 71.39	1	$ 71.39
1088	**775**	SADDLE 12" X 1-1/2" TAP D/B 12.75 - 13.20 317-132012-000 (S08-C07)	317-132012-000	$ 66.53	1	$ 66.53	$ 71.40	1	$ 71.40
1089	**776**	SADDLE 12" X 2" TAP D/B 12.62 - 14.32 317-143214-000 (S08-C08)	317-143214-000	$ 71.13	4	$ 284.52	$ 74.60	4	$ 298.40
1090	**779**	SADDLE 16" X 1" TAP D/B 17.40 - 18.88 317-188808-000 (S08-C11)	317-188808-000	$ 89.32	1	$ 89.32	$ 94.80	1	$ 94.80
1091	**780**	SADDLE 16" X 1-1/2" TAP D/B 15.95 - 17.25 317-172512-000 (S08-C12)	317-172512-000	$ 88.49	1	$ 88.49	$ 96.50	1	$ 96.50
1092	**781**	SADDLE 16-18" X 1-1/2" TAP D/B 17.40-18.88 317-188812-000 (S08-D01)	317-188812-000	$ 95.49	1	$ 95.49	$ 99.00	1	$ 99.00
1093	**782**	SADDLE 16" X 2" TAP D/B 17.40-18.88 317-188814-000 (S08-D02)	317-188814-000	$ 95.49	1	$ 95.49	$ 99.00	1	$ 99.00
1094	**783**	SADDLE 18" X 1" TAP D/B 19.00-20.50 JCM 645320 (S08-D03)	645320	$ 157.52	1	$ 157.52	$ 126.10	1	$ 126.10
1095	**785**	SADDLE 20" X 1" TAP D/B 21.35 - 22.60 JCM 406-2260X08IP (S08-D04)	406-2260X08IP	$ 162.39	1	$ 162.39	$ 141.20	1	$ 141.20
1096	**786**	SADDLE 20" X 2" TAP D/B 21.35 - 22.60 JCM 406-2260X14IP (S08-D05)	406-2260X14IP	$ 177.20	1	$ 177.20	$ 148.30	1	$ 148.30
1097	**787**	SADDLE 24-26" X 1" TAP D/B 25.50-26.50 JCM 406-2650X08IP (S08-D06)	406-2650X08IP	$ 181.71	1	$ 181.71	$ 195.00	1	$ 195.00
1098	**1308**	SADDLE TAP 3-4" X 2" S/B 3.74 - 4.55 315-00045514-000 (S08-B05)	315-00045514-000	$ 24.68	3	$ 74.04	$ 26.20	3	$ 78.60
1099	**1757**	SADDLE 14" X 2" TAP D/B 14.73 - 15.65 317-156514-000 (S08-C09)	317-156514-000	$ 77.06	1	$ 77.06	$ 81.80	1	$ 81.80
1100	**2045**	SADDLE 8"x1" TAP S/B 8.54 - 10.10 315-101008-000 (S07-D13)	315-101008-000	$ 27.01	36	$ 972.36	$ 28.65	36	$ 1,031.40
1101	**2754**	SADDLE TAP 4"x1" S/B 4.74 - 5.63 315-056308-000 (S08-B07)	315-056308-000	$ 20.08	8	$ 160.64	$ 21.60	8	$ 172.80
1102	**3766**	SADDLE TAP 16"x1" S/B FORD 17.40-18.40 FC-202-1840-IP4 (S08-C10)	FC-202-1840-IP4	$ 63.62	1	$ 63.62	$ 138.90	1	$ 138.90
1103	**5293**	SADDLE 6"X1" TAP D/B 5.94 - 6.90 317-069008-000	317-069008-000	$ 37.99	1	$ 37.99	$ 40.30	1	$ 40.30
1104	**5528**	SADDLE 10" x 1" TAP S/B 10.64 - 12.12 315-121208-000 (S08-B16)	315-121208-000	$ 29.50	1	$ 29.50	$ 31.70	1	$ 31.70
1105	**5803**	SADDLE 6"x 2" TAP D/B 5.94 - 6.90 317-069014-000	317-069014-000	$ 44.80	1	$ 44.80	$ 48.20	1	$ 48.20
1106	**5916**	SADDLE 2 1/2" X 1 1/2" S/B 2.44 - 2.91 315-029112-000 (S08-B13)	315-029112-000	$ 23.33	1	$ 23.33	$ 25.10	1	$ 25.10
1107		**17. SUBTOTAL**				**$ 8,244.34**	$ -		**$ 8,563.45**
1108		**18. TOOLS, SHOVELS, RAKES / REED, 3M, RAZORBACK OR APPROVED EQUAL**							

SUPPLIERS FOR WATER AND SEWER PRODUCTS
BID TABULATION
E-BID #20120009

	A	B	E	G	H	I	J	K	L
1		**Company Name:**		**HD WATERWORKS**			**FERGUSON WATERWORKS**		
2	Item	Item Description	Mfg. Part No.	Unit Price	Yrly Qty Est	Total	Unit Price	Yrly Qty Est	Total
1109	170	WRENCH FOR LOCKING LID - VALVE BOX 59WL (B02-21)	59WL	$ 9.09	4	$ 36.36	$ 15.10	4	$ 60.40
1110	231	SPRING 32MM FOR JAW WRENCH (B02-78)		$ 2.65	1	$ 2.65	$ 100.00	1	$ 100.00
1111	232	JAW 1-1/4IN FOR JAW WRENCH - ONE HANDED 32MM (B02-77)		$ 24.79	1	$ 24.79	$ 100.00	1	$ 100.00
1112	275	BLADE 1-1/2IN SCISSOR SHEAR - REED #SC1/PIPE CUTTER (B04-24)	REED #SC1	$ 4.84	1	$ 4.84	$ 31.00	1	$ 31.00
1113	335	BLADE FOR 18IN PVC SAW - PPS18B REED *PER EA.* (B13-C01)	PPS18B	$ 9.51	7	$ 66.57	$ 25.00	7	$ 175.00
1114	336	SAW HAND 18IN FOR PVC - PPS18 REED *PER EA.* (B13-D01)	PPS18	$ 15.48	7	$ 108.36	$ 25.00	7	$ 175.00
1115	809	CURB BX BSE/ARCH PAT 1 1/4X5FT - W/27/32IN BRASS PLUG (S09-A05)		$ 26.98	1	$ 26.98	$ 34.62	1	$ 34.62
1116	810	STATIONARY ROD FOR CURB VALVE - 5FT 59ROD60 FORD (S09-A06)	59ROD60	$ 14.48	1	$ 14.48	$ 24.31	1	$ 24.31
1117	811	HANDLE T-SHUT OFF ROD 5FT - FORD 59SROD5	59SROD5	$ 41.85	1	$ 41.85	$ 16.70	1	$ 16.70
1118	820	HOOK MANHOLE COVER - P553 (S09-B13)	P553	$ 19.53	3	$ 58.59	$ 20.70	3	$ 62.10
1119	822	PROBE FIBERGLASS W/TEE HANDLE - 4FT (S09-B15)		$ 15.85	31	$ 491.35	$ 26.20	31	$ 812.20
1120	823	WRENCH ADJUSTABLE HYDRANT - AHW (S09-B16)		$ 15.67	8	$ 125.36	$ 18.80	8	$ 150.40
1121	1108	SHOVEL ROUND-POINT RAZORBACK - 65UF45520 (SW-04)	65UF45520	$ 19.99	68	$ 1,359.32	$ 25.00	68	$ 1,700.00
1122	1110	SHOVEL SQUARE-POINT RAZORBACK - 65UF44124 (SW-10)	65UF44124	$ 20.33	23	$ 467.59	$ 25.00	23	$ 575.00
1123	2018	PIN ASSEMBLY FOR JAW WRENCH - 92727 MW-PS (B02-75)		$ 1.71	1	$ 1.71	$ 8.00	1	$ 8.00
1124	2019	PIN 3/16IN SPRIAL F/JAW WRENCH - 30008 (B02-76)		$ 1.71	1	$ 1.71	$ 5.00	1	$ 5.00
1125	2092	CUTTER PVC PIPE 1-1/2IN - REED RS1 (B12-C01)	RS1	$ 55.69	19	$ 1,058.11	$ 84.44	19	$ 1,604.36
1126	2750	WRENCH VALVE KEY TELESCOPIC - 2x4-8FT STEEL (S09-A07)		$ 80.41	1	$ 80.41	$ 93.60	1	$ 93.60
1127	2785	CRIMPING TOOL 3/4-1 IN STEEL - PES1CTS FOR POLY (B01-H10)		$ 180.12	1	$ 180.12	$ 54.90	1	$ 54.90
1128	2830	BLADE 1-1/2IN RATCHET SHEARS - RS-1B REED (B12-C02)	RS-1B	$ 20.89	21	$ 438.69	$ 27.60	21	$ 579.60
1129	3168	HANDLE POST HOLE DIGGER - 72/IN WOOD (SW-14)		$ 40.54	1	$ 40.54	$ 65.90	1	$ 65.90
1130	3259	BLADE 2IN RATCHET SHEARS REED - RS2 REED (B04-23)	RS2	$ 28.27	4	$ 113.08	$ 34.80	4	$ 139.20
1131	5015	WRENCH VALVE OPERATING 2IN SQ. X 6FT LONG (S09-C11)		$ 51.84	2	$ 103.68	$ 60.60	2	$ 121.20
1132	5767	HOOK MANHOLE 36IN (S09-B14)		$ 25.44	6	$ 152.64	$ 20.70	6	$ 124.20
1133		**18. SUBTOTAL**				**$ 4,999.78**	$ -		**$ 6,812.69**
1134		**19. VALVES/GATE, STEEL/CLOW,DEZURIK, KENNEDY OR APPROVED EQUAL**					$ -		
1135	988	VALVE 2IN GATE KENNEDY FG#4597 - 200W / IRON (S11-C19)	4597 - 200W	$ 216.06	1	$ 216.06	$ 324.14	1	$ 324.14
1136	989	VALVE 4IN PLUG DEZURIK - FIG118.F.6.RS26.ANG (S12-E06)	FIG118.F.6.RS26.ANG	$ 291.87	1	$ 291.87	$ 293.90	1	$ 293.90
1137	990	VALVE 4IN CHECK FLANGED (S12-E07)		$ 1,045.45	1	$ 1,045.45	$ 579.53	1	$ 579.53
1138	991	VALVE 4IN GATE F6100 MJ - R/S (S12-E08)	F6100 MJ - R/S	$ 332.19	7	$ 2,325.33	$ 340.86	7	$ 2,386.02
1139	992	VALVE 6IN GATE F6100 MJ - R/S L/ACC (S12-E09)	F6100 MJ - R/S	$ 423.89	3	$ 1,271.67	$ 435.25	3	$ 1,305.75
1140	994	VALVE 6" GATE F6106 MJ / FLANGE (S12-E10)	F6106 MJ / FLANGE	$ 443.77	1	$ 443.77	$ 607.14	1	$ 607.14

SUPPLIERS FOR WATER AND SEWER PRODUCTS
BID TABULATION
E-BID #20120009

	A	B	E	G	H	I	J	K	L
1		**Company Name:**		**HD WATERWORKS**			**FERGUSON WATERWORKS**		
2	**Item**	**Item Description**	**Mfg. Part No.**	**Unit Price**	**Yrly Qty Est**	**Total**	**Unit Price**	**Yrly Qty Est**	**Total**
1141	**995**	VALVE 8IN GATE F6100 MJ - R/S (S12-E11)	F6100 MJ - R/S	$ 675.17	3	$ 2,025.51	$ 692.79	3	$ 2,078.37
1142	**1789**	VALVE 2IN GATE/RW F-THD. IRON - F6103 CLOW (S11-C20)	F6103	$ 172.68	8	$ 1,381.44	$ 208.02	8	$ 1,664.16
1143	**2093**	VALVE 10IN GATE F6100 MJ R/S (S12-E13)	F6100 MJ R/S	$ 1,052.78	1	$ 1,052.78	$ 1,080.25	1	$ 1,080.25
1144	**2214**	VALVE 12IN GATE F6100 MJ - R/S (S12-E12)	F6100 MJ - R/S	$ 1,332.16	3	$ 3,996.48	$ 1,366.92	3	$ 4,100.76
1145	**2722**	VALVE 12IN PLUG W/GEAR & 2NUT - 10785901052255 (S10-E09)	10785901052255	$ 2,051.05	1	$ 2,051.05	$ 1,860.98	1	$ 1,860.98
1146	**4207**	VALVE 3IN FLGED PLUG DEZURIK W BURIED SERV ADAPTER (S12-E04)		$ 227.14	1	$ 227.14	$ 247.56	1	$ 247.56
1147	**4208**	VALVE 2IN FLANGED PLUG DEZURIK W/BURIED SERV. ADAPT (S12-E02)		$ 152.18	1	$ 152.18	$ 163.41	1	$ 163.41
1148	**4209**	VALVE 3IN FLANGED KENNEDY SPRING & LEVER (S12-E03)		$ 753.30	1	$ 753.30	$ 749.88	1	$ 749.88
1149	**4210**	VALVE 2IN CHECK FLANGED KENNEDY SPRING & LEVER (S12-E01)		$ 859.51	1	$ 859.51	$ 934.35	1	$ 934.35
1150	**5374**	VALVE 3IN GATE F6100 MJ RW L/ACC - R/S (S12-E05)	F6100 MJ RW L/ACC - R/S	$ 297.27	1	$ 297.27	$ 305.31	1	$ 305.31
1151	**5766**	VALVE 16IN MJ GATE - F6100 W/SQ OPERATING NUT	F6100	$ 3,608.18	1	$ 3,608.18	$ 4,582.01	1	$ 4,582.01
1152	**5773**	VALVE 6IN TAPPING F6114 MJ RW	F6114 MJ RW	$ 340.74	1	$ 340.74	$ 607.14	1	$ 607.14
1153	**5785**	VALVE 3IN GATE F6102 R/S - FLANGED W/HAND WHEEL	F6102 R/S	$ 294.71	1	$ 294.71	$ 302.41	1	$ 302.41
1154	**5789**	VALVE 6IN CHECK SPR & LVR - KENNEDY #106LS	106LS	$ 1,351.47	1	$ 1,351.47	$ 1,188.16	1	$ 1,188.16
1155	**5790**	VALVE 6IN PLUG DEZURIK #F118N - FLANGED W/2IN OP NUT	F118N	$ 481.53	1	$ 481.53	$ 517.07	1	$ 517.07
1156	**5821**	VALVE 8IN DEZURIK PLUG FLANGED - 2IN OP NUT/#F118N	F118N	$ 632.58	1	$ 632.58	$ 724.39	1	$ 724.39
1157	**5841**	VALVE 4IN KENNEDY SPRING/LEVER - FLANGED STYLE 106SL	106SL	$ 1,044.83	1	$ 1,044.83	$ 883.24	1	$ 883.24
1158	**6092**	VALVE 2 1/2" GATE/RW THRD F6103 CLOW (S11-C21)	F6103	$ 249.85	1	$ 249.85	$ 257.54	1	$ 257.54
1159		**19. SUBTOTAL**				**$ 26,394.70**			**$ 27,743.47**
1160		**20. NO-LEAD BRASS ITEMS / FORD, MUELLER OR APPROVED EQUAL**							
1161	**10**	ADAPTER HYD 2 1/2" x 2" FXM SWIVEL (S06-B33)		$ 83.89	5	$ 419.45	$ 88.57	5	$ 442.85
1162	**283**	VALVE SWING CHECK 1 1/2" BRASS M31 5 PER BX (S06-F08)	M31	$ 24.05	553	$ 13,299.65	$ 24.90	553	$ 13,769.70
1163	**566**	VALVE 1-1/2IN BALL MxFL - BF83-666W BRASS (S06-E39)	BF83-666W	$ 135.91	1	$ 135.91	$ 145.90	1	$ 145.90
1164	**567**	VALVE 2IN BALL MIPxMF LW BRASS - BF83-77W FORD (S06-E41)	BF83-77W	$ 219.90	2	$ 439.80	$ 236.00	2	$ 472.00
1165	**568**	CORP 1-1/2IN STOP MPTxCTS/PJ - BF1100-6 (S06-E40)	BF1100-6	$ 106.32	0	$ -	$ 114.10	0	$ -
1166	**569**	BALL CORP 1-1/2IN MxF - FB1700-6 (S06-D05)	FB1700-6	$ 102.86	1	$ 102.86	$ 110.40	1	$ 110.40
1167	**570**	BALL CORP 2IN MxF BRASS - FB1700-7 *2 PER BX* (S06-E38)	FB1700-7	$ 166.40	8	$ 1,331.20	$ 178.60	8	$ 1,428.80
1168	**578**	BACKFLOW 3/4IN VAC BRKR 8B07 - WATTS EDP# 0061992 (S06-E45)	8B07 / 61992	$ 24.55	7	$ 171.85	$ -	7	$ -
1169	**592**	NIPPLE 3/4xCL TBE BRASS - 2012-001 (S06-E26)	2012-001	$ 1.78	112	$ 199.36	$ 2.04	112	$ 228.48
1170	**593**	NIPPLE 1IN X CL BRASS - 2016-001 (S06-E23)	2016-001	$ 2.63	40	$ 105.20	$ 3.00	40	$ 120.00

SUPPLIERS FOR WATER AND SEWER PRODUCTS
BID TABULATION
E-BID #20120009

	A	B	E	G	H	I	J	K	L
1		**Company Name:**		**HD WATERWORKS**			**FERGUSON WATERWORKS**		
2	**Item**	**Item Description**	**Mfg. Part No.**	**Unit Price**	**Yrly Qty Est**	**Total**	**Unit Price**	**Yrly Qty Est**	**Total**
1171	**594**	NIPPLE 1IN x 3IN BRASS TBE - 2016-300 (S06-E22)	2016-300	$ 4.37	32	$ 139.84	$ 5.00	32	$ 160.00
1172	**595**	NIPPLE 1-1/2IN x CL BRASS - 2024-001 (S06-E17)	2024-001	$ 5.16	10	$ 51.60	$ 5.90	10	$ 59.00
1173	**596**	NIPPLE 1-1/2 x 3IN BRASS - 2024-300 (S06-E18)	2024-300	$ 7.65	8	$ 61.20	$ 8.80	8	$ 70.40
1174	**597**	NIPPLE 2IN X CL BRASS TBE - 2032-001 (S06-E21)	2032-001	$ 7.87	26	$ 204.62	$ 9.00	26	$ 234.00
1175	**598**	NIPPLE 2INx4IN TBE BRASS - 2032-400 (S06-E14)	2032-400	$ 12.82	9	$ 115.38	$ 14.70	9	$ 132.30
1176	**599**	VALVE 3/4IN GATE FPT BRASS - 3407GM300 (S06-F02)	3407GM300	$ 5.30	300	$ 1,590.00	$ 8.40	300	$ 2,520.00
1177	**600**	VALVE 1IN GATE FPT BRASS - 200 WOG *5 PER BX* (S06-C01)	200 WOG	$ 7.26	0	$ -	$ 11.70	0	$ -
1178	**601**	VALVE 1-1/2IN GATE FPT BRASS - #200 WOG FPT *4 PER BX* (S06-C02)	200 WOG	$ 25.36	5	$ 126.80	$ 24.50	5	$ 122.50
1179	**602**	VALVE 2IN GATE FPT BRASS - #200 WOG FPT *2 PER BX* (S06-C03)	200 WOG	$ 38.70	1	$ 38.70	$ 34.20	1	$ 34.20

SUPPLIERS FOR WATER AND SEWER PRODUCTS
BID TABULATION
E-BID #20120009

	A	B	E	G	H	I	J	K	L
1		**Company Name:**		**HD WATERWORKS**			**FERGUSON WATERWORKS**		
2	**Item**	**Item Description**	**Mfg. Part No.**	**Unit Price**	**Yrly Qty Est**	**Total**	**Unit Price**	**Yrly Qty Est**	**Total**
1180	**603**	VALVE 3/4IN HOSE BIBB BRASS - 3407HBM (S06-C11)	3407HBM	$ 8.34	430	$ 3,586.20	$ 10.00	430	$ 4,300.00
1181	**604**	VALVE 1IN HOSE BIBB BRASS - #107-265/T-531 MALE (S06-C12)	107-265/T-531	$ 20.83	0	$ -	$ 15.00	0	$ -
1182	**605**	VALVE 3/4IN STR DUAL CK BRASS - HHS31-323 FORD *8 PER BX* (S06-D22)	HHS31-323	$ 47.02	2055	$ 96,626.10	$ 48.20	2055	$ 99,051.00
1183	**606**	VALVE 1IN STRAIGHT DUAL CHECK - BRASS FORD#HHS31-344 (S06-D23)	HHS31-344	$ 51.10	20	$ 1,022.00	$ 54.90	20	$ 1,098.00
1184	**607**	CORP 1IN STOP BRASS - CTS/PJ X TAPER MPT		$ 37.10	0	$ -	$ 39.60	0	$ -
1185	**610**	VALVE 3/4X5/8IN ANGLE KEY - KV13-332W BRASS *12 PER BX* (S06-D28)	KV13-332W	$ 23.20	45	$ 1,044.00	$ 24.90	45	$ 1,120.50
1186	**611**	VALVE 3/4X3/4IN ANGLE KEY - KV43-332WG BRASS *8 PER BX* (S06-D32)	KV43-332WG	$ 29.67	3	$ 89.01	$ 31.90	3	$ 95.70
1187	**613**	VALVE 1IN ANGLE KEY BRASS - KV13-444W *5 PER BX* (S06-D26)	KV13-444W	$ 35.58	32	$ 1,138.56	$ 37.30	32	$ 1,193.60
1188	**614**	VALVE 1X1IN ANGLE KEY - BRASS P/N-KV43-444WG *5 PER BX* (S06-D27)	KV43-444WG	$ 40.86	2	$ 81.72	$ 43.60	2	$ 87.20
1189	**615**	COUPLING 3/4IN COMP/SINGLE - C84-33G MPJxCTS/PJ BR 24 bx (S06-D15)	C84-33G	$ 11.18	7	$ 78.26	$ 12.00	7	$ 84.00
1190	**616**	COUPLING 1IN COMP/SINGLE BRASS C84-44G MPTxCTS/PJ 14 PER BX (S06-D1	C84-44G	$ 13.24	44	$ 582.56	$ 14.30	44	$ 629.20
1191	**618**	COUPLING 3/4IN DOUBLE COMP - CTS/PJ #C44-33 BRASS	C44-33G	$ 13.61	0	$ -	$ 14.70	0	$ -
1192	**620**	COUPLING 2IN COMP DBL GRIP/JNT - BRASS #C44-77G FORD (S06-D09)	C44-77G	$ 70.34	2	$ 140.68	$ 75.50	2	$ 151.00
1193	**626**	METER COUPLING 3/4IN BRASS - PLUMBERS PIECES (S06-C17)		$ 7.44	75	$ 558.00	$ 7.80	75	$ 585.00
1194	**627**	METER COUPLING 1 IN BRASS - PLUMBERS PIECE (S06-C18)		$ 11.31	35	$ 395.85	$ 12.00	35	$ 420.00
1195	**629**	TEE 1IN BRASS FPT (S06-C19)		$ 16.89	13	$ 219.57	$ 8.95	13	$ 116.35
1196	**630**	ELL 90 2IN ST FxMPT BRASS - 30209E (S06-C23)	30209E	$ 57.22	3	$ 171.66	$ 29.88	3	$ 89.64
1197	**631**	REDUCER 1X3/4IN BRASS FXM/THD - MUELLER/METER (S06-E31)		$ 14.09	36	$ 507.24	$ 10.63	36	$ 382.68
1198	**633**	REDUCER 1-1/2 X 1IN MPTxFPT - BRASS (S06-E30)		$ 16.65	118	$ 1,964.70	$ 7.22	118	$ 851.96
1199	**634**	REDUCER 2-1/2IN x 2IN MxF - BRASS BUSHING (S06-E33)		$ 16.05	5	$ 80.25	$ 35.60	5	$ 178.00
1200	**635**	ADAPTER HYD 2 1/2" X 2" BRASS - MNST (S06-B38)		$ 38.49	25	$ 962.25	$ 25.38	25	$ 634.50
1201	**636**	ADAPTER HYD 2 1/2" x 3/4" BRASS - FNST X MIPT (S06-B34)		$ 30.75	3	$ 92.25	$ 16.63	3	$ 49.89
1202	**637**	ADAPTER HYD 2 1/2" X 1" BRASS (S06-B35)		$ 31.13	3	$ 93.39	$ 17.50	3	$ 52.50
1203	**638**	ADAPTER HYD 2 1/2" x 1 1/2" - BRASS (S06-B36)		$ 81.42	0	$ -	$ 18.10	0	$ -
1204	**639**	ADAPTER HYD 2 1/2" X 2" BRASS FXM (S06-B37)		$ 23.51	3	$ 70.53	$ 17.24	3	$ 51.72
1205	**644**	HOSE NOZZLE 2 1/2" BRASS AMLOK 84-20-3 (S06-B31)	84-20-3	$ 124.11	1	$ 124.11	$ 114.90	1	$ 114.90
1206	**651**	RESETTER COPPER 5/8 x 3/4 x 7 - V42-7W (S06-F03)	V42-7W	$ 68.24	114	$ 7,779.36	$ 71.50	114	$ 8,151.00
1207	**652**	RESETTER COPPER 5/8 x 3/4 x 9 - V42-9W FORD (S06-F04)	V42-9W	$ 69.09	23	$ 1,589.07	$ 72.40	23	$ 1,665.20
1208	**653**	RESETTER COPPER 5/8 X 3/4 X 12 V42-12W (S06-F06)	V42-12W	$ 71.52	18	$ 1,287.36	$ 75.00	18	$ 1,350.00
1209	**654**	RESETTER COPPER 1 X 10IN - FORD V44-10W (S07-E13)	V44-10W	$ 130.31	0	$ -	$ 139.90	0	$ -

SUPPLIERS FOR WATER AND SEWER PRODUCTS
BID TABULATION
E-BID #20120009

	A	B	E	G	H	I	J	K	L
1		Company Name:		HD WATERWORKS			FERGUSON WATERWORKS		
2	Item	Item Description	Mfg. Part No.	Unit Price	Yrly Qty Est	Total	Unit Price	Yrly Qty Est	Total
1210	655	RESETTER COPPER 1 X 12IN - FORD V44-12W (S07-E14)	V44-12W	$ 133.41	0	$ -	$ 143.20	0	$ -
1211	1198	NIPPLE 1/4" X 2" BRASS 2271-419 (S06-C38)	2271-419	$ 1.23	3	$ 3.69	$ 1.40	3	$ 4.20
1212	1307	BALL 2IN CURB STOP FXF BRASS - B11-77W FORD *2 PER BX* (S06-E43)	B11-77W	$ 180.17	4	$ 720.68	$ 193.40	4	$ 773.60
1213	1377	NIPPLE 1 X 36IN BRASS TBE (S06-E03)		$ 48.33	4	$ 193.32	$ 57.50	4	$ 230.00
1214	1378	NIPPLE 1 1/2 X 36IN BRASS TBE (S06-E04)		$ 91.00	1	$ 91.00	$ 100.80	1	$ 100.80
1215	1379	NIPPLE 2IN X 3IN BRASS TBE - 2032-300 (S06-E15)	2032-300	$ 9.80	27	$ 264.60	$ 10.90	27	$ 294.30
1216	1380	ELL 90 DEG.3/4IN FPTxFPT BRASS - 4501-150 (S06-C27)	4501-150	$ 4.90	0	$ -	$ 4.11	0	$ -
1217	1381	ELL 90 1IN FPT X FPT - BRASS (S06-C28)		$ 7.56	11	$ 83.16	$ 6.33	11	$ 69.63
1218	1382	ELL 1-1/2IN 90 FXF - BRASS (S06-C21)		$ 15.00	0	$ -	$ 12.56	0	$ -
1219	1383	ELL 90 2IN FXF BRASS - 4501-400 (S06-C24)	4501-400	$ 24.43	5	$ 122.15	$ 20.44	5	$ 102.20
1220	1572	ADAPTER METER 1 X 3/4 IN MXF - BRASS #3907A24 PER PR. (S06-E37)	3907A24	$ 18.55	0	$ -	$ 19.90	0	$ -
1221	1573	REDUCER 2 X 1-1/2IN MxF BRASS - HEX BUSHING (S06-E32)		$ 11.27	8	$ 90.16	$ 10.71	8	$ 85.68
1222	1606	REDUCER 1 X 3/4IN MPTxFPT - BRASS BUSHING (S06-E28)		$ 3.50	69	$ 241.50	$ 3.32	69	$ 229.08
1223	1640	COUPLING 5/8 X 3/4IN METER - C31-23 Ford BRASS (S06-E36)	C31-23	$ 10.63	2	$ 21.26	$ 11.40	2	$ 22.80
1224	1655	REDUCER 1 1/4X1IN MXF/THD - BRASS (S06-E29)		$ 5.56	7	$ 38.92	$ 5.66	7	$ 39.62
1225	1656	NIPPLE 3/4 X 36IN BRASS TBE - 2012-3600 (S06-E02)	2012-3600	$ 32.24	1	$ 32.24	$ 37.90	1	$ 37.90
1226	1657	NIPPLE 2 X 36IN BRASS TBE - 2032-3600 (S06-E01)	2032-3600	$ 109.47	3	$ 328.41	$ 128.60	3	$ 385.80
1227	1775	VALVE 1/2IN BALL FPT BRASS (S06-C04)		$ 4.93	5	$ 24.65	$ 11.50	5	$ 57.50
1228	1776	VALVE 1IN BALL FPT BRASS - 68-100 (S06-C06)		$ 10.24	34	$ 348.16	$ 24.50	34	$ 833.00
1229	1809	REDUCER 2 x 3/4IN MxF BRASS - 3020B07020B07 (S06-E34)	3020B07020B07	$ 13.59	8	$ 108.72	$ 12.89	8	$ 103.12
1230	1810	REDUCER 2x1IN MPTxFPT BRASS - 3020B10 (S06-E35)	3020B10	$ 21.51	15	$ 322.65	$ 12.89	15	$ 193.35
1231	1811	ELL 90 2IN CTS/PJ X CTS/PJ - L44-77 BRASS (S06-D06)	L44-77	$ 146.82	4	$ 587.28	$ 157.60	4	$ 630.40
1232	1812	VALVE 2IN ANGLE MTR STOP FxFLG - FORD #BFA13-777W *2 PER BX* (S06-E	BFA13-777W	$ 198.65	4	$ 794.60	$ 213.20	4	$ 852.80
1233	1830	TEE 2IN FPT BRASS (S06-C20)		$ 33.82	7	$ 236.74	$ 28.30	7	$ 198.10
1234	2055	VALVE 3/4X1IN ANGLE BRASS - KV13-342W *10 PER BX* (S06-D30)	KV13-342W	$ 24.77	36	$ 891.72	$ 26.30	36	$ 946.80
1235	2056	ADAPTER HYD 2 1/2" X 2" BRASS (S06-B32)		$ 89.43	0	$ -	$ 17.50	0	$ -
1236	2091	COUPLING 2IN FPT x FPT BRASS - 4540-400 flagg (S06-C16)	4540-400	$ 18.56	13	$ 241.28	$ 17.62	13	$ 229.06
1237	2459	CROSS 2IN FPT BRASS (S06-C22)		$ 51.27	0	$ -	$ 53.99	0	$ -
1238	2667	CAP 1-1/4IN THREADED BRASS (S06-C29)		$ 6.65	1	$ 6.65	$ 6.30	1	$ 6.30
1239	2668	ELL 90 3/4IN STREET FxM BRASS - X103-12 (S06-C25)	X103-12	$ 5.07	2	$ 10.14	$ 5.34	2	$ 10.68

SUPPLIERS FOR WATER AND SEWER PRODUCTS
BID TABULATION
E-BID #20120009

	A	B	E	G	H	I	J	K	L
1		Company Name:		HD WATERWORKS			FERGUSON WATERWORKS		
2	Item	Item Description	Mfg. Part No.	Unit Price	Yrly Qty Est	Total	Unit Price	Yrly Qty Est	Total
1240	2669	ELL 90 1IN STREET FPTxMPT BRAS - X103-16 (S06-C26)	X103-16	$ 8.39	9	$ 75.51	$ 8.83	9	$ 79.47
1241	2755	NUT & 1IN GASKET ASSEMBLY GRIP NUT - BRASS (S06-C34)		$ 3.75	0	$ -	$ 9.50	0	$ -
1242	2756	NUT & 1IN GASKET ASSEMBLY GRIP NUT GJCN4-4 - BRASS (S06-C35)	GJCN4-4	$ 17.30	50	$ 865.00	$ 9.50	50	$ 475.00
1243	2762	VALVE 2IN BALL FPT BRASS - 3420BM200 *2 PER BX* (S06-C08)	3420BM200	$ 34.65	15	$ 519.75	$ 94.00	15	$ 1,410.00
1244	2907	VALVE 3/4IN BALL FPT BRASS - 3407BM200 (S06-C05)	3407BM200	$ 6.94	131	$ 909.14	$ 15.90	131	$ 2,082.90
1245	3022	NIPPLE 3/4 X 3IN BRASS (S06-E27)		$ 3.01	25	$ 75.25	$ 3.50	25	$ 87.50
1246	3112	UNION 3/4IN FPT BRASS (S06-C30)		$ 10.17	0	$ -	$ 10.71	0	$ -
1247	3113	UNION 1IN FPT BRASS (S06-C31)		$ 13.46	0	$ -	$ 14.18	0	$ -
1248	3126	UNION 1 1/2IN FPT - BRASS (S06-C32)		$ 23.27	0	$ -	$ 24.50	0	$ -
1249	3127	UNION 2IN 3/PC FPT BRASS - 3020U (S06-C33)	3020U	$ 39.74	1	$ 39.74	$ 37.72	1	$ 37.72
1250	3481	VALVE 1 X 3/4IN STRAIGHT BALL 5/BX- B43-342WG (S06-D29)	B43-342WG	$ 64.24	2	$ 128.48	$ 59.70	2	$ 119.40
1251	3484	VALVE 1X1IN STRAIGHT BALL - BRASS (S06-D31)		$ 61.58	1	$ 61.58	$ 66.37	1	$ 66.37
1252	3978	VALVE 1-1/2IN BALL FPT BRASS 3415BM200 (S06-C07)	3415BM200	$ 13.69	47	$ 643.43	$ 65.00	47	$ 3,055.00
1253	4039	VALVE 4IN GATE BRASS FPT #300 PART #3440GM300 (S06-C10)	3440GM300	$ 120.05	0	$ -	$ 314.50	0	$ -
1254	5325	COUPLING 1IN DOUBLE COMP BRASS - C44-44G CTS GRIP *12 PER BX* (S06-D:	C44-44G	$ 15.57	152	$ 2,366.64	$ 16.80	152	$ 2,553.60
1255	5380	COUPLING 2IN GRIP/JOINT BRASS - C84-77G MPTxCTS/GJ (S06-D18)	C84-77G	$ 52.84	16	$ 845.44	$ 56.80	16	$ 908.80
1256	5381	ELL 90 1IN COMP.GRIP BRASS - L44-44G FORD *8 PER BX* (S06-D21)	L44-44G	$ 22.60	129	$ 2,915.40	$ 24.30	129	$ 3,134.70
1257	5383	VALVE 3/4x1IN ANGLE U-BRANCH - UV-43-42-WG FORD *8 PER BX* (S06-F0	UV-43-42-WG	$ 84.13	464	$ 39,036.32	$ 90.30	464	$ 41,899.20
1258	5384	CORP STOP 1IN BRASS MPTxCTS/G - F1100-4G FORD *6 PER BX* (S06-D24)	F1100-4G	$ 36.89	386	$ 14,239.54	$ 39.60	386	$ 15,285.60
1259	5389	COUPLING 1-1/2IN FPTxFPT BRASS - 30155 (S06-C15)	30155	$ 26.18	3	$ 78.54	$ 10.71	3	$ 32.13
1260	5390	VALVE ANGLE 3/4 x 1IN BRASS - KV43-342WG GRIP JNT (S06-D25)	KV43-342WG	$ 32.83	315	$ 10,341.45	$ 35.30	315	$ 11,119.50
1261	5403	VALVE 3IN GATE BRASS FPT - FIG. M300 (S06-C09)	M300	$ -	1	$ -	$ 128.10	1	$ 128.10
1262	5406	BALL 1-1/2IN CURB STOP FPTxFPT - BRASS FORD B11-666W *2 PER BX* (S06-	B11-666W	$ 123.94	0	$ -	$ 132.90	0	$ -
1263	5429	NUT ASSEM 1IN/FORD GRIP JOINTS - GJN4-4 (S06-B26)	GJN4-4	$ 5.85	0	$ -	$ 8.00	0	$ -
1264	5430	NUT ASSEM 2IN/FORD GRIP JOINTS - GJN4-7 (S06-B25)	GJN4-7	$ 17.30	0	$ -	$ 23.60	0	$ -
1265	5471	COUPLING 3/4IN DBL COMP BRASS GRIP/JOINT C44-33G 14/BX (S06-D19)	C44-33G	$ 13.61	3	$ 40.83	$ 14.61	3	$ 43.83
1266	5476	COUPLING 3/4IN FPT x FPT - BRASS (S06-C13)		$ 3.50	14	$ 49.00	$ 3.32	14	$ 46.48
1267	5477	COUPLING 1IN FPT x FPT BRASS (S06-C14)		$ 6.01	9	$ 54.09	$ 5.04	9	$ 45.36
1268	5479	NIPPLE 1IN X 6IN TBE BRASS (S06-E19)		$ 8.37	14	$ 117.18	$ 9.60	14	$ 134.40
1269	5588	NIPPLE 3/4 IN X 6 IN BRASS TBE (S06-E24)		$ 5.73	4	$ 22.92	$ 6.60	4	$ 26.40

SUPPLIERS FOR WATER AND SEWER PRODUCTS
BID TABULATION
E-BID #20120009

	A	B	E	G	H	I	J	K	L
1		Company Name:		HD WATERWORKS			FERGUSON WATERWORKS		
2	Item	Item Description	Mfg. Part No.	Unit Price	Yrly Qty Est	Total	Unit Price	Yrly Qty Est	Total
1270	5589	NIPPLE 1 IN X 4 IN BRASS TBE (S06-E20)		$ 5.68	12	$ 68.16	$ 6.50	12	$ 78.00
1271	5590	NIPPLE 3/4 IN X 4 IN BRASS TBE (S06-E25)		$ 3.93	4	$ 15.72	$ 4.50	4	$ 18.00
1272	5677	NIPPLE 2IN X 6IN BRASS TBE (S06-E16)		$ 18.93	14	$ 265.02	$ 21.60	14	$ 302.40
1273	5748	VALVE SWING CHECK 2" BRASS M31 2 PER BX (S06-C36)	M31	$ 36.90	11	$ 405.90	$ 38.20	11	$ 420.20
1274	5771	ELL 90 3/4IN COMP GRIP BRASS L44-33G (S06-D16)	L44-33G	$ 17.59	0	$ -	$ 18.90	0	$ -
1275	5802	VALVE 3/4IN X 3/4IN BALL CURB - FORD #B43-332W-G *5 PER BX* (S06-D11	B43-332W-G	$ 51.42	21	$ 1,079.82	$ 55.20	21	$ 1,159.20
1276	5898	NIPPLE 3/4 x 12IN BRASS (S06-E05)		$ 10.98	1	$ 10.98	$ 12.60	1	$ 12.60
1277	5899	NIPPLE 3/4 x 18IN BRASS (S06-E07)		$ 17.29	0	$ -	$ 19.20	0	$ -
1278	5900	NIPPLE 3/4 x 24IN BRASS (S06-E09)		$ 23.06	2	$ 46.12	$ 25.60	2	$ 51.20
1279	5901	NIPPLE 1 x 12IN BRASS (S06-E06)		$ 16.46	4	$ 65.84	$ 18.80	4	$ 75.20
1280	5902	NIPPLE 1 x 18IN BRASS (S06-E08)		$ 25.93	1	$ 25.93	$ 28.80	1	$ 28.80
1281	5903	NIPPLE 1 x 24IN BRASS (S06-E11)		$ 34.57	2	$ 69.14	$ 38.30	2	$ 76.60
1282	5904	NIPPLE 2 x 12IN BRASS (S06-E10)		$ 37.29	2	$ 74.58	$ 42.50	2	$ 85.00
1283	5905	NIPPLE 2 x18IN BRASS (S06-E13)		$ 58.73	2	$ 117.46	$ 65.10	2	$ 130.20
1284	5906	NIPPLE 2 x 24IN BRASS (S06-E12)		$ 78.32	0	$ -	$ 86.80	0	$ -
1285	5918	VALVE 1 1/2 IN FPT x FPT - 2621-015 (S05-D03)	2621-015	$ 16.65	2	$ 33.30	$ 32.90	2	$ 65.80
1286	5927	COPR STOP 3/4 IN BRASS - 3/4 IN F1100-3-G *10 PER BX* (S06-D14)	F1100-3-G	$ 24.53	0	$ -	$ 26.20	0	$ -
1287	5983	COUPLING COMP. 1 1/2" BRASS C44-66G (S06-D08)	C44-66G	$ 52.42	0	$ -	$ 56.00	0	$ -
1288	5984	MALE ADPT. COMP. 1 1/2" BRASS C84-66G (S06-D07)	C84-66G	$ 36.48	0	$ -	$ 39.00	0	$ -
1289	6015	VALVE 1 1/2 CHECK SINGLE HS11-666 *4 PER BX* (S06-E44)	HS11-666	$ 112.13	1	$ 112.13	$ 119.70	1	$ 119.70
1290	6070	VALVE BALL METER B13-332W 3/4x1 *6 PER BX* (S06-D13)	B13-332W	$ 46.02	10	$ 460.20	$ 49.10	10	$ 491.00
1291	6071	VALVE BALL METER B13-344W 3/4x1 *5 PER BX* (S06-D12)	B13-344W	$ 50.20	0	$ -	$ 53.60	0	$ -
1292		**20. SUBTOTAL**				**$ 220,897.31**			**$ 234,876.15**
1293		**21. METERS, WATER & ALL PARTS**							
1294	3	BACKFLOW 3/4" PREVENTER RPZ WILKINS XL (S10-B01)	975XL	$ 288.38	32	$ 9,228.16	$ 236.40	32	$ 7,564.80
1295	646	BACKFLOW 1" PREVENTER RPZ WILKINS 975XL (S10-B02)	975XL	$ 310.78	19	$ 5,904.82	$ 249.90	19	$ 4,748.10
1296	650	BACKFLOW 2" PREVENTER RPZ WILKINS 975XL	975XL	$ 702.55	13	$ 9,133.15	$ 486.80	13	$ 6,328.40
1297	5608	BACKFLOW 1 1/2" PREVENTER RPZ WILKINS 975XL (S10-B03)	975XL	$ 625.61	3	$ 1,876.83	$ 438.40	3	$ 1,315.20
1298		**21. SUBTOTAL**				**$ 26,142.96**			**$ 19,956.50**
1299		**TOTAL BID REPLY**				**$ 775,736.84**			**$ 869,321.26**

SUPPLIERS FOR WATER AND SEWER PRODUCTS
BID TABULATION
E-BID #20120009

	A	B	E	G	H	I	J	K	L
1		Company Name:		HD WATERWORKS			FERGUSON WATERWORKS		
2	Item	Item Description	Mfg. Part No.	Unit Price	Yrly Qty Est	Total	Unit Price	Yrly Qty Est	Total
1300		SUBTOTAL SUMMARY:							
1301	1	ALL GRINDER COMPENTS/FLOMATIC ONLY				$ 440.30			$ 4,129.30
1302	2	BRASS ITEMS / FORD, MUELLER OR APPROVED EQUAL				$ 166,673.58			$ 178,701.45
1303	3	D/I PARTS, ALL TYPES AMERICAN OR APPROVED EQUAL				$ 27,977.34			$ 34,116.40
1304	4	DUCTILE IRON PIPE / McWANE OR APPROVED EQUAL				$ 1,750.92			$ 2,122.56
1305	5	FIRE HYDRANT & PARTS				$ 37,664.83			$ 63,134.62
1306	6	FLO-CONTROL HOT TAP SADDLES ONLY				$ 15,160.90			$ 16,557.15
1307	7	GENERAL ITEMS				$ 23,496.63			$ 43,113.94
1308	8	LIFT STATION PARTS/ US FOUNDRY OR APPROVED EQUAL				$ 2,136.06			$ 2,925.51
1309	9	METER BOXES & LIDS				$ 77,451.64			$ 88,394.24
1310	10	METERS, WATER & ALL PARTS				$ 11,555.85			$ 12,366.40
1311	11	PIPE, PVC 40, C900				$ 40,545.67			$ 49,540.52
1312	12	PLUMBING PARTS / STREAMLINE-MUELLER OR APPROVED EQUAL				$ 3,332.02			$ 3,261.00
1313	13	PVC PARTS & FITTINGS / SPEARS OR APPROVED EQUAL				$ 26,955.94			$ 26,957.73
1314	14	REPAIR CLAMPS & FERNCOS / SMITH-BLAIR, FORD OR APPROVED EQUAL				$ 23,698.05			$ 25,193.06
1315	15	SCH 80 PIPE & ALL FITTINGS / SPEARS OR APPROVED EQUAL				$ 27,905.61			$ 17,919.60
1316	16	STAINLESS STEEL				$ 2,312.41			$ 2,935.52
1317	17	TAP SADDLES, ALL TYPES / SMITH-BLAIR OR APPROVED EQUAL				$ 8,244.34			$ 8,563.45
1318	18	TOOLS, SHOVELS, RAKES / REED, 3M, RAZORBACK OR APPROVED EQUAL				$ 4,999.78			$ 6,812.69
1319	19	VALVES/GATE, STEEL/CLOW,DEZURIK, KENNEDY OR APPROVED EQUAL				$ 26,394.70			$ 27,743.47
1320	20	NO-LEAD BRASS				$ 220,897.31			$ 234,876.15
1321	21	METERS, WATER & ALL PARTS				$ 26,142.96			$ 19,956.50
1322		TOTAL				$ 775,736.84			$ 869,321.26

SUPPLIERS FOR WATER AND SEWER PRODUCTS
BID TABULATION
E-BID #20120009

	A	B	E	G	H	I	J	K	L
1	Company Name:			HD WATERWORKS			FERGUSON WATERWORKS		
2	Item	Item Description	Mfg. Part No.	Unit Price	Yrly Qty Est	Total	Unit Price	Yrly Qty Est	Total
1323	PSL Part								
1324	FOR ITEMS NOT IDENTIFIED IN BID, PROVIDE DISCOUNTS FROM THE FOLLOWING MANUFACTURERS LIST PRICE:								
1325			Item #			Total			
1326			1088	SMITH-BLAIR:		0.00%			5.00%
1327			1089	CLOW:		0.00%			5.00%
1328			1090	JCM:		0.00%			5.00%
1329	1. ALL PIPE (DI, PVC, CTS, ETC.) PRICING WILL BE REVIEWED QUARTERLY.		1091	ROMAC:		0.00%			5.00%
1330									
1331			1092	MUELLER:		0.00%			5.00%
			1093	ARI AIR RELEASE VALVE:		0.00%			
1332	2. FOR ALL ITEMS NOT IDENTIFIED IN BID, HD SUPPLY WATERWORKS, LTD. WILL SELL TO THE CITY OF PORT ST. LUCIE 12% OVER REPLACEMENT COST.								5.00%
1333			1094	VAL-MATIC:		0.00%			5.00%
	3. *90% OF THE CITY'S INVENTORY LIST TO BE DELIVERED WHEN NEEDED.			SPEARS:		0.00%			
1334			1095						5.00%
1335			1096	FLO-CONTROL:		0.00%			5.00%
1336			1097	KENNEDY:		0.00%			5.00%
1337			1098	CUSTOM FAB:		0.00%			5.00%
1338			1099	FORD:		0.00%			5.00%
1339			1100	UNION/TYLER:		0.00%			5.00%
1340									
1341	Additional Items Reviewed:								
1342	Drug-Free Workplace Form uploaded to Demandstar					Yes			Yes
1343	Copy of $40,000 Bid Bond/Security uploaded - original received w/n 3 business days					Yes			Yes
1344	E-Bid Reply uploaded					Yes			Yes
1345	E-Bid Reply Excel Spreadsheet uploaded					Yes			Yes
1346	Bid Addenda 1-4 acknowledged					Yes			Yes
1347	Current Insurance Certificate uploaded to Demandstar					Yes			Yes
1348	Delivery time after receipt of order					3 days			7-14 days
1349	Will accept the P-Card					Yes			Yes
1350	Copy of Licenses and Certificates					Yes			Yes
1351	Electronic Order entry system ordered			Internet Based Windows Interface (see flyer)					Ferguson Online
1352	"Floor Stock" quantities kept in inventory					*See response in Notes			1.6 million
1353	Checklist					Yes			Yes

SUPPLIERS FOR WATER AND SEWER PRODUCTS
BID TABULATION
E-BID #20120009

	E	G	H	I	J	K	L
1		HD WATERWORKS			FERGUSON WATERWORKS		
2	Mfg. Part No.	Unit Price	Yrly Qty Est	Total	Unit Price	Yrly Qty Est	Total
28	DR18	$ 15.71	1	$ 15.71	$ 13.69	1	$ 13.69
29	DR18	$ 22.17	1	$ 22.17	$ 19.32	1	$ 19.32
30	DR18	$ 36.47	1	$ 36.47	$ 34.50	1	$ 34.50
31	DR18	$ 56.72	5	$ 283.60	$ 53.83	5	$ 269.15
32	DR25	$ 41.28	1	$ 41.28	$ 53.83	1	$ 53.83
33		$ 1.81	121	$ 219.01	$ 1.35	121	$ 163.35
34		$ 3.04	1	$ 3.04	$ 0.98	1	$ 0.98
35		$ 0.58	141	$ 81.78	$ 0.50	141	$ 70.50
36		$ 0.84	91	$ 76.44	$ 0.75	91	$ 68.25
37		$ 1.29	342	$ 441.18	$ 1.15	342	$ 393.30
38		$ 1.17	479	$ 560.43	$ 1.00	479	$ 479.00
39		$ 2.20	5	$ 11.00	$ 1.90	5	$ 9.50
40		$ 0.83	11	$ 9.13	$ 1.20	11	$ 13.20
41		$ 5.37	121	$ 649.77	$ 4.70	121	$ 568.70
42		$ 2.20	1	$ 2.20	$ 0.93	1	$ 0.93
43		$ 2.99	21	$ 62.79	$ 4.30	21	$ 90.30
44		$ 3.75	1	$ 3.75	$ 3.30	1	$ 3.30
45		$ 10.36	211	$ 2,185.96	$ 9.10	211	$ 1,920.10
46		$ 15.60	1	$ 15.60	$ 13.50	1	$ 13.50
47		$ 0.42	111	$ 46.62	$ 0.37	111	$ 41.07
48	316 SS	$ 14.65	1	$ 14.65	$ 12.30	1	$ 12.30
49				**$ 40,519.21**			**$ 48,839.70**

SUPPLIERS FOR WATER AND SEWER PRODUCTS
BID TABULATION
E-BID #20120009

	E	G	H	I	J	K	L
1		HD WATERWORKS			FERGUSON WATERWORKS		
2	Mfg. Part No.	Unit Price	Yrly Qty Est	Total	Unit Price	Yrly Qty Est	Total
3		$ 0.24	481	$ 115.44	$ 0.23	481	$ 110.63
4		$ 0.26	22511	$ 5,852.86	$ 0.35	22511	$ 7,878.85
5		$ 0.43	2211	$ 950.73	$ 0.50	2211	$ 1,105.50
6		$ 1.39	6141	$ 8,535.99	$ 1.75	6141	$ 10,746.75
7		$ 0.72	811	$ 583.92	$ 0.85	811	$ 689.35
8		$ 0.49	3261	$ 1,597.89	$ 0.70	3261	$ 2,282.70
9		$ 1.34	1	$ 1.34	$ 1.75	1	$ 1.75
10		$ 0.51	22581	$ 11,516.31	$ 0.65	22581	$ 14,677.65
11		$ 1.94	1541	$ 2,989.54	$ 2.40	1541	$ 3,698.40
12	SDR-26	$ 6.20	9	$ 55.80	$ 5.69	9	$ 51.21
13	DR 18-C-900	$ 9.94	33	$ 328.02	$ 9.11	33	$ 300.63
14	DR18 C-900	$ 2.87	51	$ 146.37	$ 2.64	51	$ 134.64
15	DR-18 C900	$ 5.75	122	$ 701.50	$ 5.27	122	$ 642.94
16	SDR-26	$ 1.58	9	$ 14.22	$ 1.45	9	$ 13.05
17	SDR-26	$ 3.44	42	$ 144.48	$ 3.16	42	$ 132.72
18		$ 4.92	58	$ 285.36	$ 6.10	58	$ 353.80
19		$ 5.55	1	$ 5.55	$ 6.50	1	$ 6.50
20	DR18	$ 43.68	1	$ 43.68	$ 43.58	1	$ 43.58
21	DR18	$ 45.97	1	$ 45.97	$ 43.58	1	$ 43.58
22	DR18	$ 77.48	1	$ 77.48	$ 77.50	1	$ 77.50
23	DR18	$ 81.54	1	$ 81.54	$ 77.50	1	$ 77.50
24	DR18	$ 21.07	74	$ 1,559.18	$ 19.32	74	$ 1,429.68
25	DR18	$ 14.92	1	$ 14.92	$ 13.69	1	$ 13.69
26	DR18	$ 34.65	1	$ 34.65	$ 34.50	1	$ 34.50
27	DR18	$ 53.89	1	$ 53.89	$ 53.83	1	$ 53.83

Bid Reply Sheet
Bid # 2012009
Suppliers for Water and Sewer Products

1. **COMPANY NAME**: HD Supply Waterworks, Ltd.

DIVISION OF: HD Supply, Inc.

PHYSICAL ADDRESS: 7374 Commercial Circle Ft

MAILING ADDRESS: same

CITY, STATE, ZIP CODE: Ft. Pierce, FL 34951

TELEPHONE NUMBER: ( ) 772-466-5955 FAX NO. ( ) 772-466-5954

CONTACT PERSON: Debra Bancroft E-MAIL: Debra.bancroft@hdsupply.com

2. **ORGANIZATIONAL PROFILE**: (complete all appropriate information)

Is the firm incorporated? Yes--No If yes, in what state? _____

_____
President

_____
Vice President

_____
Treasurer

How long in present business: 80 yrs How long at present location: 18 yrs

Is firm a minority business: Yes--No Does firm have a drug-free workplace program: Yes--No
If no, is your company planning to implement such a program? _____

Within the previous 5 fiscal years has your organization been involved in litigation, major disputes, contract defaults, or liens? If so, please list the name of the project and explain nature and current status of the project.
no

3. **ADDENDUM ACKNOWLEDGMENT** - Bidder acknowledges that the following addenda have been received and are included in its proposal/bid:

Addendum Number	Date Issued
1	3-19-2012
2	3-27-2012
3	3-27-2012
4	4-2-2012

4. VENDOR'S LIST – If your company offers commodities other than the one specified for this bid, and you wish to be put on the vendor's list, please contact Onvia.com at (800) 711-1712. Bid Tabulation Reports are advertised on the City's Web Site at www.Cityofpsl.com.

5. BID RESPONSE:

5.1 Bidder will / will not accept the Purchasing Card (Visa).
(please circle one)

5.2 Percentage of discount when payment is made with Visa: 0 %

5.3 In accordance with Section 2.4 of the specifications, if unable to supply pipe within the required one (1) day time frame, please indicate proposed delivery time from receipt of order. 3 Days

5.4 Indicate "Floor Stock" quantities kept in inventory as referenced in Section 2.5:
90% of the City's inventory list to be delivered when needed

5.5 Please state the electronic order entry system offered: Internet based & windows interface
* See flyer ATTACHED

5.6 List location of warehouse site for material pick-up. 7374 Commercial Circle Ft. Pierce, FL 34951

5.7 If brands specified are not being bid, please list all "or equal" brands:
1½ check valve we bid Mafco Nora

E-Bid Reply Sheet Totals $ 775,763.84

Bidders are cautioned that the anticipated quantities used for this computation will be estimates. The City makes no guarantee as to the actual quantity that will be utilized during the Contract period. A unit price for each item offered shall be shown, and such price shall include packing and shipping unless otherwise specified.

6. INSURANCE CERTIFICATES LICENSE - Bidders are required, in accordance with Section 5, to submit a copy of their Insurance Certificate for the type and dollar amount of insurance they currently maintain. Bidders are required to submit all licenses and certifications required to perform this project.

7. COMPLETION OF FORM - An authorized representative of the firm offering this Bid must complete this form in its entirety. Prices entered herein shall not be subject to withdrawal or escalation by Bidder. The City reserves the right to hold proposals and bid guarantees for a period not to exceed 90 days after the date of the bid opening stated in the Invitation to Bid before awarding the Contract. Contract award constitutes the date that City Council executes the motion to award the bid.

8. CONTRACT - Bidder agrees to comply with all requirements stated in the specifications for this bid.

9. CERTIFICATION

This bid is submitted by: Name (print) Susan Helms, Municipal Sales Coor. who is an officer of the above firm duly authorized to sign bids and enter into Contracts. I certify that this bid is made without prior understanding, Contract, or connection with any corporation, firm, or person submitting a bid for the same materials, supplies, or equipment, and is in all respects fair and without collusion or fraud. I understand collusive bidding is a violation of State and Federal law and can result in fines, prison sentences, and civil damage awards. I agree to abide by all conditions of this bid.

Susan Helms — 3/27/12

Signature — Date

10. Bidder has read and accepts the terms and conditions of the City's standard Contract:

Susan Helms — 3/27/12

Signature — Title

If a corporation renders this Bid, the corporate seal attested by the secretary shall be affixed below. Any agent signing this Bid shall attach to this form evidence of legal authority.

(seal)

Balance of page left blank

ADDENDUM #2 - REVISED BID REPLY SPREADSHEET
E-BID #20120009

	A	B	E	G	H	I
1		**Company Name:**				
2	Item	Item Description	Mfg. Part No.	Unit Price	Yrly Qty Est	Total
3		**1. ALL GRINDER COMPENTS/FLOMATIC ONLY**				
4	3328	VALVE BALL CHECK 1-1/4IN PVC - 208T (S04-B19)	208T	$ 3.70	119	$ 440.30
5		**1. SUBTOTAL**				**$ 440.30**
6		**2. BRASS ITEMS / FORD, MUELLER OR APPROVED EQUAL**				
7	10	ADAPTER HYD 2 1/2" x 2" FXM SWIVEL (S06-B33)		$ 59.63	5	$ 298.15
8	283	VALVE SWING CHECK 1 1/2" BRASS M31 5 PER BX (S06-F08)	M31	$ 16.79	553	$ 9,284.87
9	566	VALVE 1-1/2IN BALL MxFL - BF83-666W BRASS (S06-E39)	BF83-666W	$ 93.22	1	$ 93.22
10	567	VALVE 2IN BALL MIPxMF LW BRASS - BF83-77W FORD (S06-E41)	BF83-77W	$ 150.82	2	$ 301.64
11	568	CORP 1-1/2IN STOP MPTxCTS/PJ - BF1100-6 (S06-E40)	BF1100-6	$ 72.92	1	$ 72.92
12	569	BALL CORP 1-1/2IN MxF - FB1700-6 (S06-D05)	FB1700-6	$ 70.55	1	$ 70.55
13	570	BALL CORP 2IN MxF BRASS - FB1700-7 *2 PER BX* (S06-E38)	FB1700-7	$ 114.13	8	$ 913.04
14	578	BACKFLOW 3/4IN VAC BRKR 8B07 - WATTS EDP# 0061992 (S06-E45)	8B07 / 61992	$ 3.63	7	$ 25.41
15	592	NIPPLE 3/4xCL TBE BRASS - 2012-001 (S06-E26)	2012-001	$ 1.56	112	$ 174.72
16	593	NIPPLE 1IN X CL BRASS - 2016-001 (S06-E23)	2016-001	$ 2.28	41	$ 93.48
17	594	NIPPLE 1IN x 3IN BRASS TBE - 2016-300 (S06-E22)	2016-300	$ 3.79	1	$ 3.79
18	595	NIPPLE 1-1/2IN x CL BRASS - 2024-001 (S06-E17)	2024-001	$ 4.49	11	$ 49.39
19	596	NIPPLE 1-1/2 x 3IN BRASS - 2024-300 (S06-E18)	2024-300	$ 6.64	8	$ 53.12
20	597	NIPPLE 2IN X CL BRASS TBE - 2032-001 (S06-E21)	2032-001	$ 6.83	26	$ 177.58
21	598	NIPPLE 2INx4IN TBE BRASS - 2032-400 (S06-E14)	2032-400	$ 11.14	9	$ 100.26
22	599	VALVE 3/4IN GATE FPT BRASS - 3407GM300 (S06-F02)	3407GM300	$ 4.75	311	$ 1,477.25
23	600	VALVE 1IN GATE FPT BRASS - 200 WOG *5 PER BX* (S06-C01)	200 WOG	$ 7.69	1	$ 7.69
24	601	VALVE 1-1/2IN GATE FPT BRASS - #200 WOG FPT *4 PER BX* (S06-C02)	200 WOG	$ 15.26	5	$ 76.30
25	602	VALVE 2IN GATE FPT BRASS - #200 WOG FPT *2 PER BX* (S06-C03)	200 WOG	$ 23.29	1	$ 23.29
26	603	VALVE 3/4IN HOSE BIBB BRASS - 3407HBM (S06-C11)	3407HBM	$ 2.84	431	$ 1,224.04
27	604	VALVE 1IN HOSE BIBB BRASS - #107-265/T-531 MALE (S06-C12)	107-265/T-531	$ 8.09	1	$ 8.09
28	605	VALVE 3/4IN STR DUAL CK BRASS - HHS31-323 FORD *6 PER BX* (S06-D22)	HHS31-323	$ 35.27	2155	$ 76,006.85
29	606	VALVE 1IN STRAIGHT DUAL CHECK - BRASS FORD#HHS31-344 (S06-D23)	HHS31-344	$ 38.33	21	$ 804.93
30	607	CORP 1IN STOP BRASS - CTS/PJ X TAPER MPT		$ 33.71	1	$ 33.71
31	610	VALVE 3/4X5/8IN ANGLE KEY - KV13-332W BRASS *12 PER BX* (S06-D28)	KV13-332W	$ 17.41	45	$ 783.45
32	611	VALVE 3/4X3/4IN ANGLE KEY - KV43-332WG BRASS *8 PER BX* (S06-D32)	KV43-332WG	$ 22.26	3	$ 66.78
33	613	VALVE 1IN ANGLE KEY BRASS - KV13-444W *5 PER BX* (S06-D26)	KV13-444W	$ 26.70	32	$ 854.40
34	614	VALVE 1X1IN ANGLE KEY - BRASS P/N-KV43-444WG *5 PER BX* (S06-D27)	KV43-444WG	$ 30.47	2	$ 60.94
35	615	COUPLING 3/4IN COMP/SINGLE - C84-33G MPJxCTS/PJ BR 24 bx (S06-D15)	C84-33G	$ 8.38	7	$ 58.66
36	616	COUPLING 1IN COMP/SINGLE BRASS C84-44G MPTxCTS/PJ 14 PER BX (S06-D17)	C84-44G	$ 9.94	44	$ 437.36
37	618	COUPLING 3/4IN DOUBLE COMP - CTS/PJ #C44-33 BRASS	C44-33G	$ 10.21	1	$ 10.21
38	620	COUPLING 2IN COMP DBL GRIP/JNT - BRASS #C44-77G FORD (S06-D09)	C44-77G	$ 48.24	2	$ 96.48
39	623	SCREW OIL FOR OPERATING NUT STANDARD TRAFFIC 190703 (BC2-28)	190703	$ 2.07	2	$ 4.14
40	626	METER COUPLING 3/4IN BRASS - PLUMBERS PIECES (S06-C17)		$ 3.07	75	$ 230.25
41	627	METER COUPLING 1 IN BRASS - PLUMBERS PIECE (S06-C18)		$ 5.39	35	$ 188.65
42	629	TEE 1IN BRASS FPT (S06-C19)		$ 5.64	13	$ 73.32
43	630	ELL 90 2IN ST FxMPT BRASS - 30209E (S06-C23)	30209E	$ 18.84	3	$ 56.52
44	631	REDUCER 1X3/4IN BRASS FXM/THD - MUELLER/METER (S06-E31)		$ 7.94	36	$ 285.84
45	633	REDUCER 1-1/2 X 1IN MPTxFPT - BRASS (S06-E30)		$ 4.55	118	$ 536.90
46	634	REDUCER 2-1/2IN x 2IN MxF - BRASS BUSHING (S06-E33)		$ 13.49	5	$ 67.45
47	635	ADAPTER HYD 2 1/2" X 2" BRASS - MNST (S06-B38)		$ 23.17	25	$ 579.25
48	636	ADAPTER HYD 2 1/2" x 3/4" BRASS - FNST X MIPT (S06-B34)		$ 18.74	3	$ 56.22
49	637	ADAPTER HYD 2 1/2" X 1" BRASS (S06-B35)		$ 18.74	3	$ 56.22
50	638	ADAPTER HYD 2 1/2" x 1 1/2" - BRASS (S06-B36)		$ 13.12	1	$ 13.12
51	639	ADAPTER HYD 2 1/2" X 2" BRASS FXM (S06-B37)		$ 14.20	3	$ 42.60
52	644	HOSE NOZZLE 2 1/2" BRASS AMLOK 84-20-3 (S06-B31)	84-20-3	$ 70.00	1	$ 70.00
53	651	RESETTER COPPER 5/8 x 3/4 x 7 - V42-7W (S06-F03)	V42-7W	$ 51.23	114	$ 5,840.22
54	652	RESETTER COPPER 5/8 x 3/4 x 9 - V42-9W FORD (S06-F04)	V42-9W	$ 51.87	23	$ 1,193.01
55	653	RESETTER COPPER 5/8 X 3/4 X 12 V42-12W (S06-F06)	V42-12W	$ 53.70	18	$ 966.60
56	654	RESETTER COPPER 1 X 10IN - FORD V44-10W (S07-E13)	V44-10W	$ 97.83	1	$ 97.83
57	655	RESETTER COPPER 1 X 12IN - FORD V44-12W (S07-E14)	V44-12W	$ 100.16	1	$ 100.16
58	1198	NIPPLE 1/4" X 2" BRASS 2271-419 (S06-C38)	2271-419	$ 1.02	3	$ 3.06
59	1307	BALL 2IN CURB STOP FXF BRASS - B11-77W FORD *2 PER BX* (S06-E43)	B11-77W	$ 123.68	4	$ 494.72
60	1377	NIPPLE 1 X 36IN BRASS TBE (S06-E03)		$ 45.05	4	$ 180.20
61	1378	NIPPLE 1 1/2 X 36IN BRASS TBE (S06-E04)		$ 79.05	1	$ 79.05
62	1379	NIPPLE 2IN X 3IN BRASS TBE - 2032-300 (S06-E15)	2032-300	$ 8.51	27	$ 229.77
63	1380	ELL 90 DEG.3/4IN FPTxFPT BRASS - 4501-150 (S06-C27)	4501-150	$ 2.59	1	$ 2.59
64	1381	ELL 90 1IN FPT X FPT - BRASS (S06-C28)		$ 3.99	11	$ 43.89
65	1382	ELL 1-1/2IN 90 FXF - BRASS (S06-C21)		$ 7.92	1	$ 7.92
66	1383	ELL 90 2IN FXF BRASS - 4501-400 (S06-C24)	4501-400	$ 12.89	5	$ 64.45
67	1572	ADAPTER METER 1 X 3/4 IN MXF - BRASS #3907A24 PER PR. (S06-E37)	3907A24	$ 14.20	1	$ 14.20
68	1573	REDUCER 2 X 1-1/2IN MxF BRASS - HEX BUSHING (S06-E32)		$ 6.75	8	$ 54.00
69	1606	REDUCER 1 X 3/4IN MPTxFPT - BRASS BUSHING (S06-E28)		$ 2.09	69	$ 144.21
70	1640	COUPLING 5/8 X 3/4IN METER - C31-23 Ford BRASS (S06-E36)	C31-23	$ 7.97	2	$ 15.94

ADDENDUM #2 - REVISED BID REPLY SPREADSHEET
E-BID #20120009

	A	B	E	G	H	I
71	**1655**	REDUCER 1 1/4X1IN MXF/THD - BRASS (S06-E29)		$ 3.57	7	$ 24.99
72	**1656**	NIPPLE 3/4 X 36IN BRASS TBE - 2012-3600 (S06-E02)	2012-3600	$ 30.05	1	$ 30.05
73	**1657**	NIPPLE 2 X 36IN BRASS TBE - 2032-3600 (S06-E01)	2032-3600	$ 102.17	3	$ 306.51
74	**1775**	VALVE 1/2IN BALL FPT BRASS (S06-C04)		$ 3.25	5	$ 16.25
75	**1776**	VALVE 1IN BALL FPT BRASS - 68-100 (S06-C06)		$ 7.70	34	$ 261.80
76	**1809**	REDUCER 2 x 3/4IN MxF BRASS - 3020B07020B07 (S06-E34)	3020B07020B07	$ 8.13	8	$ 65.04
77	**1810**	REDUCER 2x1IN MPTxFPT BRASS - 3020B10 (S06-E35)	3020B10	$ 8.13	15	$ 121.95
78	**1811**	ELL 90 2IN CTS/PJ X CTS/PJ - L44-77 BRASS (S06-D06)	L44-77	$ 100.70	4	$ 402.80
79	**1812**	VALVE 2IN ANGLE MTR STOP FxFLG - FORD #BFA13-777W *2 PER BX* (S06-E42)	BFA13-777W	$ 136.25	4	$ 545.00
80	**1830**	TEE 2IN FPT BRASS (S06-C20)		$ 17.85	7	$ 124.95
81	**2054**	MARKER BRASS - FOR 2" WATER VALVE (S10-D23)		$ 11.36	1	$ 11.36
82	**2055**	VALVE 3/4X1IN ANGLE BRASS - KV13-342W *10 PER BX* (S06-D30)	KV13-342W	$ 18.58	36	$ 668.88
83	**2056**	ADAPTER HYD 2 1/2" X 2" BRASS (S06-B32)		$ 53.83	1	$ 53.83
84	**2091**	COUPLING 2IN FPT x FPT BRASS - 4540-400 flagg (S06-C16)	4540-400	$ 11.11	13	$ 144.43
85	**2459**	CROSS 2IN FPT BRASS (S06-C22)		$ 34.05	1	$ 34.05
86	**2667**	CAP 1-1/4IN THREADED BRASS (S06-C29)		$ 3.97	1	$ 3.97
87	**2668**	ELL 90 3/4IN STREET FxM BRASS - X103-12 (S06-C25)	X103-12	$ 3.37	2	$ 6.74
88	**2669**	ELL 90 1IN STREET FPTxMPT BRAS - X103-16 (S06-C26)	X103-16	$ 5.58	9	$ 50.22
89	**2755**	NUT & 1IN GASKET ASSEMBLY GRIP NUT - BRASS (S06-C34)		$ 3.77	1	$ 3.77
90	**2756**	NUT & 1IN GASKET ASSEMBLY GRIP NUT GJCN4-4 - BRASS (S06-C35)	GJCN4-4	$ 6.67	51	$ 340.17
91	**2762**	VALVE 2IN BALL FPT BRASS - 3420BM200 *2 PER BX* (S06-C08)	3420BM200	$ 29.78	15	$ 446.70
92	**2907**	VALVE 3/4IN BALL FPT BRASS - 3407BM200 (S06-C05)	3407BM200	$ 4.96	131	$ 649.76
93	**3022**	NIPPLE 3/4 X 3IN BRASS (S06-E27)		$ 2.61	25	$ 65.25
94	**3112**	UNION 3/4IN FPT BRASS (S06-C30)		$ 6.75	1	$ 6.75
95	**3113**	UNION 1IN FPT BRASS (S06-C31)		$ 8.94	1	$ 8.94
96	**3126**	UNION 1 1/2IN FPT - BRASS (S06-C32)		$ 15.46	1	$ 15.46
97	**3127**	UNION 2IN 3/PC FPT BRASS - 3020U (S06-C33)	3020U	$ 23.79	1	$ 23.79
98	**3481**	VALVE 1 X 3/4IN STRAIGHT BALL 5/BX- B43-342WG (S06-D29)	B43-342WG	$ 41.69	2	$ 83.38
99	**3484**	VALVE 1X1IN STRAIGHT BALL - BRASS (S06-D31)		$ 45.92	1	$ 45.92
100	**3976**	VALVE 1-1/2IN BALL FPT BRASS 3415BM200 (S06-C07)	3415BM200	$ 17.88	47	$ 840.36
101	**4039**	VALVE 4IN GATE BRASS FPT #300 PART #3440GM300 (S06-C10)	3440GM300	$ 119.97	1	$ 119.97
102	**5325**	COUPLING 1IN DOUBLE COMP BRASS - C44-44G CTS GRIP *12 PER BX* (S06-D20)	C44-44G	$ 11.69	152	$ 1,776.88
103	**5380**	COUPLING 2IN GRIP/JOINT BRASS - C84-77G MPTxCTS/GJ (S06-D18)	C84-77G	$ 35.54	16	$ 568.64
104	**5381**	ELL 90 1IN COMP.GRIP BRASS - L44-44G FORD *8 PER BX* (S06-D21)	L44-44G	$ 16.96	129	$ 2,187.84
105	**5383**	VALVE 3/4x1IN ANGLE U-BRANCH - UV-43-42-WG FORD *8 PER BX* (S06-F01)	UV-43-42-WG	$ 63.11	464	$ 29,283.04
106	**5384**	CORP STOP 1IN BRASS MPTxCTS/G - F1100-4G FORD *6 PER BX* (S06-D24)	F1100-4G	$ 28.34	386	$ 10,939.24
107	**5389**	COUPLING 1-1/2IN FPTxFPT BRASS - 30155 (S06-C15)	30155	$ 6.75	3	$ 20.25
108	**5390**	VALVE ANGLE 3/4 x 1IN BRASS - KV43-342WG GRIP JNT (S06-D25)	KV43-342WG	$ 24.62	315	$ 7,755.30
109	**5403**	VALVE 3IN GATE BRASS FPT - FIG. M300 (S06-C09)	M300	$ 68.10	1	$ 68.10
110	**5406**	BALL 1-1/2IN CURB STOP FPTxFPT - BRASS FORD B11-666W *2 PER BX* (S06-D10)	B11-666W	$ 84.94	1	$ 84.94
111	**5429**	NUT ASSEM 1IN/FORD GRIP JOINTS - GJN4-4 (S06-B26)	GJN4-4	$ 5.70	1	$ 5.70
112	**5430**	NUT ASSEM 2IN/FORD GRIP JOINTS - GJN4-7 (S06-B25)	GJN4-7	$ 16.51	1	$ 16.51
113	**5471**	COUPLING 3/4IN DBL COMP BRASS GRIP/JOINT C44-33G 14/BX (S06-D19)	C44-33G	$ 10.21	3	$ 30.63
114	**5476**	COUPLING 3/4IN FPT x FPT - BRASS (S06-C13)		$ 2.09	14	$ 29.26
115	**5477**	COUPLING 1IN FPT x FPT BRASS (S06-C14)		$ 3.18	9	$ 28.62
116	**5479**	NIPPLE 1IN X 6IN TBE BRASS (S06-E19)		$ 7.27	14	$ 101.78
117	**5588**	NIPPLE 3/4 IN X 6 IN BRASS TBE (S06-E24)		$ 4.97	4	$ 19.88
118	**5589**	NIPPLE 1 IN X 4 IN BRASS TBE (S06-E20)		$ 4.94	12	$ 59.28
119	**5590**	NIPPLE 3/4 IN X 4 IN BRASS TBE (S06-E25)		$ 3.41	4	$ 13.64
120	**5677**	NIPPLE 2IN X 6IN BRASS TBE (S06-E16)		$ 16.44	14	$ 230.16
121	**5748**	VALVE SWING CHECK 2" BRASS M31 2 PER BX (S06-C36)	M31	$ 26.43	11	$ 290.73
122	**5771**	ELL 90 3/4IN COMP GRIP BRASS L44-33G (S06-D16)	L44-33G	$ 13.20	1	$ 13.20
123	**5802**	VALVE 3/4IN X 3/4IN BALL CURB - FORD #B43-332W-G *5 PER BX* (S06-D11)	B43-332W-G	$ 38.57	21	$ 809.97
124	**5898**	NIPPLE 3/4 x 12IN BRASS (S06-E05)		$ 9.54	1	$ 9.54
125	**5899**	NIPPLE 3/4 x 18IN BRASS (S06-E07)		$ 15.02	1	$ 15.02
126	**5900**	NIPPLE 3/4 x 24IN BRASS (S06-E09)		$ 20.03	2	$ 40.06
127	**5901**	NIPPLE 1 x 12IN BRASS (S06-E06)		$ 14.30	4	$ 57.20
128	**5902**	NIPPLE 1 x 18IN BRASS (S06-E08)		$ 22.52	1	$ 22.52
129	**5903**	NIPPLE 1 x 24IN BRASS (S06-E11)		$ 30.04	2	$ 60.08
130	**5904**	NIPPLE 2 x 12IN BRASS (S06-E10)		$ 32.40	2	$ 64.80
131	**5905**	NIPPLE 2 x18IN BRASS (S06-E13)		$ 51.03	2	$ 102.06
132	**5906**	NIPPLE 2 x 24IN BRASS (S06-E12)		$ 68.03	1	$ 68.03
133	**5918**	VALVE 1 1/2 IN FPT x FPT - 2621-015 (S05-D03)	2621-015	$ 15.50	2	$ 31.00
134	**5927**	COPR STOP 3/4 IN BRASS - 3/4 IN F1100-3-G *10 PER BX* (S06-D14)	F1100-3-G	$ 18.73	1	$ 18.73
135	**5983**	COUPLING COMP. 1 1/2" BRASS C44-66G (S06-D08)	C44-66G	$ 35.74	1	$ 35.74
136	**5984**	MALE ADPT. COMP 1 1/2" BRASS C84-66G (S06-D07)	C84-66G	$ 24.87	1	$ 24.87
137	**6015**	VALVE 1 1/2 CHECK SINGLE HS11-666 *4 PER BX* (S06-E44)	HS11-666	$ 90.97	1	$ 90.97
138	**6031**	MARKER BRASS - FOR 2" SEWER F/M (S10-D11)		$ 11.36	1	$ 11.36
139	**6070**	VALVE BALL METER B13-332W 3/4x1 *6 PER BX* (S05-D13)	B13-332W	$ 40.84	11	$ 449.24
140	**6071**	VALVE BALL METER B13-344W 3/4x1 *5 PER BX* (S05-D12)	B13-344W	$ 44.54	1	$ 44.54
141	**6072**	MARKER BRASS - FOR 4" WATER VALVE (S10-D12)		$ 11.36	2	$ 22.72
142	**6074**	MARKER BRASS - FOR 6" WATER VALVE (S10-D13)		$ 11.36	1	$ 11.36
143	**6075**	MARKER BRASS - FOR 8" WATER VALVE (S10-D14)		$ 11.36	1	$ 11.36
144	**6076**	MARKER BRASS - FOR 10" WATER VALVE (S10-D15)		$ 11.36	1	$ 11.36

ADDENDUM #2 - REVISED BID REPLY SPREADSHEET
E-BID #20120009

	A	B	E	G	H	I
145	6077	MARKER BRASS - FOR 12" WATER VALVE (S10-D16)		$ 11.36	1	$ 11.36
146	6078	MARKER BRASS - FOR 16" WATER VALVE (S10-D17)		$ 11.36	1	$ 11.36
147	6079	MARKER BRASS - FOR 20" WATER VALVE (S10-D18)		$ 11.36	1	$ 11.36
148	6080	MARKER BRASS - FOR 24" WATER VALVE (S10-D19)		$ 11.36	1	$ 11.36
149	6081	MARKER BRASS - FOR 30" WATER VALVE (S10-D20)		$ 11.36	1	$ 11.36
150	6082	MARKER BRASS - FOR 36" WATER VALVE (S10-D21)		$ 11.36	1	$ 11.36
151	6083	MARKER BRASS - FOR 42" WATER VALVE (S10-D22)		$ 11.36	1	$ 11.36
152		**2. SUBTOTAL**				**$ 166,673.58**
153		**3. D/I PARTS, ALL TYPES AMERICAN OR APPROVED EQUAL**				
154	628	CLEAN OUT 4IN C/I W/BRASS PLUG (S06-B08)		$ 10.77	1	$ 10.77
155	680	GASKET 12IN FIELD LOCK (S08-A01)		$ 175.97	1	$ 175.97
156	734	MEGALUG 10 IN FOR D/I PIPE (S11-D21)		$ 47.30	1	$ 47.30
157	834	RISER 1IN VALVE BOX - 59VR010I (S09-D17)	59VR010I	$ 5.11	44	$ 224.84
158	835	RISER 2IN VALVE BOX - 59VR020I (S09-D18)	59VR020I	$ 10.90	63	$ 686.70
159	836	RISER 3IN VALVE BOX - 59VR030I (S09-D19)	59VR030I	$ 16.35	49	$ 801.15
160	837	RISER 4IN VALVE BOX - 59VR040I (S09-D20)	59VR040I	$ 21.81	36	$ 785.16
161	868	GASKET RUBBER 7.25-7.65 F/STEEL COUPLING (S10-A23)		$ 11.73	1	$ 11.73
162	869	GASKET 9.40-9.74 STEEL COUPLIN - FORD PN=20377 (S10-A24)	20377	$ 9.97	1	$ 9.97
163	870	GASKET RUBBER 9.46-9.85 F/STEEL COUPLING (S10-A25)		$ 9.97	1	$ 9.97
164	871	GASKET RUBBER 6.63 F/STEEL COUPLING (S10-A26)		$ 7.82	1	$ 7.82
165	872	GASKET RUBBER 8.60-9.06 F/STEEL COUPLING (S10-A27)		$ 9.97	1	$ 9.97
166	873	GASKET RUBBER F/STEEL COUPLING - PN=33813 (S10-A28)	33813	$ 18.90	1	$ 18.90
167	874	GASKET RUBBER 11.90-12.20 - F/STEEL COUPLING (S10-A29)		$ 12.46	1	$ 12.46
168	901	KIT 3IN COMPANION FLANGE D/I (S11-B02)		$ 12.29	1	$ 12.29
169	902	KIT 4IN COMPANION FLANGE - DUCTILE IRON (S11-B04)		$ 15.13	1	$ 15.13
170	903	KIT 6IN RESTRAINER - 1300 SINGLE FLANGE (S11-A04)		$ 36.88	1	$ 36.88
171	904	RESTRAINER FOR 8" PVC BELL JOINT - 1390 1300 (S11-B07)		$ 59.67	1	$ 59.67
172	905	KIT MJ 3IN ACCESSORY (S11-B01)		$ 7.81	1	$ 7.81
173	906	KIT MJ 4IN ACCESSORY (S11-B03)		$ 10.74	7	$ 75.18
174	907	KIT MJ 6IN ACC. WITH GLAND - FLANGE/GASKET/T-BOLT (S11-B05)		$ 14.65	1	$ 14.65
175	908	KIT MJ 8IN ACCESSORY (S11-B08)		$ 16.60	2	$ 33.20
176	909	KIT MJ 10IN ACCESSORY (S11-B09)		$ 23.93	1	$ 23.93
177	910	KIT MJ 12IN ACCESSORY - PART #21AMMJR12 (S11-B10)	21AMMJR12	$ 24.91	1	$ 24.91
178	911	KIT MJ 16IN ACCESSORY (S11-B12)		$ 41.02	1	$ 41.02
179	912	GASKET 3IN MJ RUBBER (S11-C01)		$ 1.31	1	$ 1.31
180	913	GASKET 3IN RUBBER TRANSITION - PART #21AMG503 (S11-C02)	21AMG503	$ 2.16	1	$ 2.16
181	914	GASKET MJ 4IN RUBBER (S11-C03)		$ 2.34	24	$ 56.16
182	915	GASKET 4IN RUBBER TRANSITION (S11-C04)		$ 2.81	16	$ 44.96
183	916	GASKET 6IN MJ RUBBER - FOR D/I PIPE (S11-C05)		$ 2.34	71	$ 166.14
184	917	GASKET 6IN TRANSITION RUBBER - 21AMG506 (S11-C06)	21AMG506	$ 3.42	6	$ 20.52
185	918	GASKET MJ 8IN RUBBER (S11-C07)		$ 2.93	24	$ 70.32
186	919	GASKET 8IN TRANSITION RUBBER (S11-C08)		$ 3.49	1	$ 3.49
187	920	GASKET 10IN MJ RUBBER (S11-C09)		$ 3.52	1	$ 3.52
188	921	GASKET 10IN TRANSITION RUBBER (S11-C10)		$ 5.73	1	$ 5.73
189	922	GASKET MJ 12IN RUBBER (S11-C11)		$ 4.75	23	$ 109.25
190	923	GASKET 12IN TRANSITION RUBBER (S11-C12)		$ 6.60	7	$ 46.20
191	924	GASKET MJ 16IN RUBBER (S11-C14)		$ 7.81	1	$ 7.81
192	925	GASKET MJ 18IN RUBBER (S11-C15)		$ 8.95	1	$ 8.95
193	926	FLANGE 3IN COMPANION D/I (S11-D01)		$ 9.54	4	$ 38.16
194	927	FLANGE 3IN UNION (S11-D02)		$ 14.93	2	$ 29.86
195	928	MEGALUG 3IN FOR D/I PIPE - PART #21AMF8031103 (S11-D03)	21AMF8031103	$ 16.72	1	$ 16.72
196	929	MEGALUG 3IN FOR PVC PIPE (S11-D04)		$ 20.26	1	$ 20.26
197	930	FLANGE 4IN SPLIT (S11-D05)		$ 16.83	1	$ 16.83
198	931	FLANGE 4IN FEMALE THD 8 HOLE - 2404FCCS STEEL (S11-D06)	2404FCCS	$ 15.13	1	$ 15.13
199	932	FLANGE 4 IN UNION - PART #2404FU (S11-D07)	2404FU	$ 25.26	4	$ 101.04
200	933	MEGALUG 4IN FOR D/I PIPE (S11-D08)		$ 17.81	5	$ 89.05
201	934	MEGALUG 4IN FOR PVC PIPE (S11-D09)		$ 21.85	17	$ 371.45
202	935	FLANGE 6IN FEMALE THD 8 HOLE - STEEL (S11-D10)		$ 19.42	1	$ 19.42
203	936	FLANGE 6IN SPLIT (S11-D11)		$ 26.13	1	$ 26.13
204	937	MEGALUG 6IN FOR D/I PIPE (S11-D12)		$ 20.94	4	$ 83.76
205	938	MEGALUG 6IN FOR PVC PIPE - 21AMF8062006PV (S11-D13)	21AMF8062006PV	$ 26.48	26	$ 688.48
206	939	FLANGE 6IN UNION DUCTILE IRON (S11-D14)		$ 30.62	1	$ 30.62
207	940	FLANGE 8IN UNION (S11-D15)		$ 37.74	1	$ 37.74
208	941	MEGALUG 8IN FOR D/I PIPE (S11-D16)		$ 29.37	2	$ 58.74
209	942	MEGALUG 8IN FOR PVC PIPE (S11-D17)		$ 39.17	24	$ 940.08
210	943	RING 8IN SPLIT 1300 (S11-D18)	1300	$ 34.72	1	$ 34.72
211	944	FLANGE 10 IN UNION (S11-D19)		$ 54.46	1	$ 54.46
212	945	MEGALUG 10IN FOR PVC PIPE (S11-D20)		$ 74.06	1	$ 74.06
213	946	RESTRAINT 12IN SPLIT 1300C (S11-B11)	1300C	$ 66.31	1	$ 66.31
214	947	MEGALUG 12IN FOR D/I PIPE (S11-E02)		$ 68.80	1	$ 68.80
215	948	FLANGE 12 IN UNION (S11-E03)		$ 63.02	1	$ 63.02
216	949	MEGALUG 12IN FOR PVC PIPE (S11-E01)		$ 77.84	32	$ 2,490.88
217	950	MEGALUG 16IN FOR D/I PIPE (S11-E04)		$ 125.47	1	$ 125.47
218	951	MEGALUG 16IN FOR PVC PIPE (S11-E05)		$ 166.60	1	$ 166.60

ADDENDUM #2 - REVISED BID REPLY SPREADSHEET
E-BID #20120009

	A	B	E	G	H	I
219	952	FLANGE 16IN UNION (S11-E06)		$ 229.32	1	$ 229.32
220	953	MEGALUG 18IN FOR D/I PIPE (S11-E07)		$ 177.73	1	$ 177.73
221	954	MEGALUG 18IN FOR PVC PIPE (S11-E08)		$ 206.64	1	$ 206.64
222	955	FLANGE 18IN UNION-400C (S11-E09)	400C	$ 259.25	1	$ 259.25
223	956	FLANGE 20IN UNION-400C (S11-E10)	400C	$ 313.45	2	$ 626.90
224	957	MEGALUG 20IN FOR PVC PIPE (S11-E11)		$ 256.18	1	$ 256.18
225	996	BOLT 5/8 X 3IN T-HEAD & NUT 120 b/x (S12-E14)		$ 0.68	4	$ 2.72
226	997	BOLT 3/4 X 4IN T-HEAD & NUT - NON-ROTATING (S12-E16)		$ 1.48	24	$ 35.52
227	998	BOLT 3/4 X 4IN T-HEAD - 60 PER BOX (S12-E17)		$ 1.02	276	$ 281.52
228	999	BOLT 3/4 X 4-1/2IN T-HEAD - & NUT (S12-E18)		$ 1.07	73	$ 78.11
229	1000	BOLT 3/4 X 4-1/2IN T-HEAD &NUT - NON ROTATING (S12-E19)		$ 1.50	1	$ 1.50
230	1001	BOLT 3/4 X 5IN T-HEAD & NUT (S12-E20)		$ 1.18	52	$ 61.36
231	1002	EYEBOLT 3/4IN ANGLED *DUC-LUG* (S12-E21)		$ 1.56	8	$ 12.48
232	1194	BEND 90 3IN FLANGED DI - PART #24039F (YD-67)	24039F	$ 37.48	1	$ 37.48
233	1195	FLANGE 3IN MJ DI (YD-68)		$ 3.36	1	$ 3.36
234	1196	CAP 3IN MJ DI (YD- 70)		$ 10.99	1	$ 10.99
235	1197	BEND 45 3IN MJ DI (YD-69)		$ 25.48	1	$ 25.48
236	1199	SLEEVE 3 x 12IN MJ DI (YD-64)		$ 23.99	1	$ 23.99
237	1200	BEND 45 4IN FLANGED DI (YD-62)		$ 51.47	1	$ 51.47
238	1201	BEND 90 4IN FLANGED DI C/L C110 (YD-63)		$ 57.97	1	$ 57.97
239	1202	PLUG 4IN MJ DI (YD-60)		$ 13.49	1	$ 13.49
240	1203	CAP 4IN MJ DI (YD-61)		$ 11.49	1	$ 11.49
241	1204	FLANGE 4IN MJ DI (YD-58)		$ 5.50	7	$ 38.50
242	1205	BEND 45 4IN MJ DI (YD-59)		$ 25.48	1	$ 25.48
243	1206	BEND 90 4IN MJ DI (YD-56)		$ 30.98	1	$ 30.98
244	1207	FLANGE 4IN WELD NECK - R.F. #150 B-16-A105 (S09-A03)	150 B-16-A105	$ 14.85	1	$ 14.85
245	1208	SLEEVE 4 x 12IN MJ DI - NOT COATED (YD-53)		$ 25.48	6	$ 152.88
246	1209	CAP 6IN MJ DI (YD-50)		$ 20.49	1	$ 20.49
247	1210	PLUG 6IN MJ DI (YD-51)		$ 25.48	1	$ 25.48
248	1211	FLANGE 6IN UNI-FLANGE - TWO HOLE FOR DI (YD-52)		$ 23.12	1	$ 23.12
249	1212	FLANGE 6IN MJ DI (YD-49)		$ 5.87	11	$ 64.57
250	1213	BEND 45 6IN FLANGED DI (YD-48)		$ 79.45	1	$ 79.45
251	1214	BEND 45 6IN MJ DI (YD-47)		$ 41.47	1	$ 41.47
252	1215	BEND 90 6IN FLANGED DI - EPOXY LINED	EPOXY LINED	$ 140.77	1	$ 140.77
253	1216	BEND 90 6IN MJ X SPIGOT DI (YD-45)		$ 61.96	1	$ 61.96
254	1217	BEND 90 6IN MJ DI CEMENT LINED YD-44)	CEMENT LINED	$ 50.97	1	$ 50.97
255	1218	SLEEVE 6 X 12IN MJ DI - CEMENT LINED (YD-43)	CEMENT LINED	$ 45.97	12	$ 551.64
256	1219	TEE 6 X 6 X 6 MJ DI (YD-41)		$ 74.46	1	$ 74.46
257	1220	FLANGE 8 IN MJ DI (YD-40)		$ 7.76	1	$ 7.76
258	1221	CAP 8IN MJ DI - 2108CT (YD-39)		$ 33.48	1	$ 33.48
259	1222	BEND 45 8 IN MJ DI CEMENT LINED (YD-38)	CEMENT LINED	$ 60.46	1	$ 60.46
260	1223	SLEEVE 8 X 12 MJ DI (YD-37)		$ 75.45	6	$ 452.70
261	1224	FLANGE 10 IN MJ DI (YD-36)		$ 11.37	1	$ 11.37
262	1225	BEND 45 10 IN MJ DI (YD-35)		$ 88.45	1	$ 88.45
263	1226	SLEEVE 10 X 12 IN MJ DI (YD-34)		$ 90.45	1	$ 90.45
264	1227	FLANGE 12 IN MJ DI (YD-33)		$ 11.74	1	$ 11.74
265	1228	CAP 12 IN MJ DI (YD-32)		$ 63.96	4	$ 255.84
266	1229	BEND 45 12IN MJ DI CEMENT LINED (YD-31)	CEMENT LINED	$ 132.42	1	$ 132.42
267	1230	SLEEVE 12IN X 12IN MJ DI (YD-30)		$ 121.93	11	$ 1,341.23
268	1232	BEND 90 12 IN FLANGED DI (YD-28)		$ 306.82	1	$ 306.82
269	1233	FLANGE 16 IN MJ DI (YD-27)		$ 19.49	1	$ 19.49
270	1234	SLEEVE 16 X 15 IN MJ DI (YD-26)		$ 233.86	1	$ 233.86
271	1235	FLANGE 18 IN MJ DI (YD-25)		$ 33.86	1	$ 33.86
272	1236	SLEEVE 18 X 15 IN MJ DI (YD-23)		$ 299.32	1	$ 299.32
273	1237	FLANGE 20 IN MJ DI (YD-21)		$ 47.47	1	$ 47.47
274	1238	SLEEVE 20 X 15 IN MJ DI (YD-20)		$ 361.28	1	$ 361.28
275	1239	LID WATER LOCKING (YD-74)		$ 15.22	11	$ 167.42
276	1240	LID SEWER VALVE BOX LOCKING (YD-71)		$ 15.22	2	$ 30.44
277	1241	LID WATER NON LOCKING - 5-1/4IN (YD-75)		$ 10.33	85	$ 878.05
278	1242	VALVE BOX TOP DI 461S (YD-73)	461S	$ 17.38	13	$ 225.94
279	1244	VALVE BOX TOP & BOTTOM - 461-S LESS LID (YD-76)	461-S	$ 31.69	61	$ 1,933.09
280	1254	REDUCER 6 X 4 IN MJ DI (YD-11)		$ 29.48	1	$ 29.48
281	1255	REDUCER 8 X 6 IN MJ DI (YD-12)		$ 42.97	1	$ 42.97
282	1256	TEE 6 X 6 X 4 IN MJ DI CEMENT LINED (YD-22)	CEMENT LINED	$ 68.96	1	$ 68.96
283	1397	WYE 2-1/2IN X 2-1/2IN PUSH ON - EPOXY COATED FOR D/I (S09-A02)	EPOXY COATED	$ 57.24	1	$ 57.24
284	2498	TEE 4 X 4 X 4 IN MJ DI (YD-57)		$ 40.98	1	$ 40.98
285	2502	BEND 11-1/4 3 IN MJ CP DI (YD-66)		$ 18.99	1	$ 18.99
286	2503	BEND 11-1/4 4 IN MJ CP DI C153 (YD-55)		$ 22.99	1	$ 22.99
287	2504	BEND 22-1/2 3 IN CP DI C153 (YD-65)		$ 15.99	1	$ 15.99
288	2505	BEND 22-1/2 4IN MJ CP DI C153 (YD-54)		$ 24.49	1	$ 24.49
289	2805	BOLT 3/4 X 3-1/2IN T-HEAD & - NUT *85 PER BX* (S12-E15)		$ 0.95	517	$ 491.15
290	2814	BEND 90 12IN MJ DI - 21129M (YD-29)	21129M	$ 159.90	1	$ 159.90
291	2815	LID SEWER NON LOCKING (YD-72)		$ 10.33	8	$ 82.64
292	5021	FLANGE 8 IN BLIND D/I - 8 HOLE		$ 79.54	1	$ 79.54

ADDENDUM #2 - REVISED BID REPLY SPREADSHEET
E-BID #20120009

	A	B	E	G	H	I
293	5388	ELL 45 DEG. 4IN GALV FPTxFPT		$ 73.88	1	$ 73.88
294	5462	EXTENSION 6FT VALVE STEM - PART #65VSE060C	65VSE060C	$ 77.45	1	$ 77.45
295	5642	ELL 45 12IN MJ DI		$ 132.42	1	$ 132.42
296	5643	KIT 12IN MEGALUG ACCESSORY - FOR PVC		$ 99.28	1	$ 99.28
297	5772	SLEEVE 12 X 6IN TAPPING D/I - OD 13.20-13.50		$ 827.73	1	$ 827.73
298	5781	TEE 3 x 3 x 3IN FLANGED D/I - PART #2403T030F	2403T030F	$ 53.47	1	$ 53.47
299	5782	TEE 3 x 3 x 2IN FLANGED D/I - BRANCH IS 2IN		$ 56.97	1	$ 56.97
300	5783	FLANGE 2 IN COMPANION - WITH 2IN FIPT		$ 6.54	1	$ 6.54
301	5784	SLEEVE 3IN X 12IN FLANGED - D/I SPOOL PIECE		$ 132.38	1	$ 132.38
302	5786	TEE 3 x 3 x 3IN MJ D/I - PART #2103T030M	2103T030M	$ 38.48	1	$ 38.48
303	5787	CAP 3IN MJ TAPPED W/2IN IPT - DUCTILE IRON		$ 23.49	1	$ 23.49
304	5788	REDUCER 6x4 DI EPOXY LINED - PART #2406R04FE	2406R04FE	$ 98.50	1	$ 98.50
305	5791	CROSS 6IN D/I EPOXY LINED - FLANGED #2406X060FE	2406X060FE	$ 352.81	1	$ 352.81
306	5792	FLANGE 6x4 REDUCING COMPANION - THRD D/I #2406FC40S	2406FC40S	$ 39.25	1	$ 39.25
307	5804	TEE 8IN FLANGED DUCTILE IRON		$ 220.87	1	$ 220.87
308	5805	TEE 6IN FLANGED DUCTILE IRON		$ 132.42	1	$ 132.42
309	5808	BEND 6IN 90 DEG D/I FLANGED - NOT LINED (YD-46)		$ 89.95	4	$ 359.80
310	5822	TEE 8 x 8 x 6IN DUCTILE IRON - FLANGED CEMENT LINED		$ 191.39	1	$ 191.39
311	5828	CAP 16IN DUCTILE IRON MJ - W/2" CENTER TH TAP (YD-24)		$ 149.91	1	$ 149.91
312	5842	CROSS 4IN DI EPOXY LINE FLANGD - PART #2404X040FE	2404X040FE	$ 244.30	1	$ 244.30
313	5860	FLANGE 12 IN BELL - 073019 for C-900 (S07-E09)		$ 108.63	1	$ 108.63
314	5868	RESTRAINT FOR 6in P.V.C. - 1390-C - 2 FLANGES (S11-B06)	1390-C	$ 29.78	1	$ 29.78
315	5938	GASKET 20" MJ (S11-C16)		$ 11.99	1	$ 11.99
316	5939	GASKET 24" MJ (S11-C17)		$ 14.85	1	$ 14.85
317	5977	TEE 8 X 8 X 6 MJ DI CEMENT LINED (ORDER ON REQUEST)		$ 111.43	1	$ 111.43
318	6019	TEE 24" EPOXY MJ (YD-14)		$ 1,420.15	1	$ 1,420.15
319	6020	SLEEVE 24" EPOXY MJ (YD-18)		$ 808.57	1	$ 808.57
320	6021	SLEEVE 12" EPOXY MJ (YD-42)		$ 274.90	1	$ 274.90
321	6022	MEGALUG 24IN FOR PVC PIPE (S10-E02)		$ 295.66	1	$ 295.66
322	6023	GASKET 24" MJ (S11-C18) SEE PART # 5939		$ 14.85	1	$ 14.85
323	6105	SLEEVE 6 X 12" MJ DI EPOXY COATED (YD-04)	EPOXY COATED	$ 123.22	1	$ 123.22
324		**3. SUBTOTAL**				**$ 27,977.34**
325		**4. DUCTILE IRON PIPE / McWANE OR APPROVED EQUAL**				
326	1185	PIPE 3IN DI C/51 CEMENT LINED (PR4-A01)	C/51 CEMENT LINED	$ 28.34	1	$ 28.34
327	1186	PIPE 4IN DI C/51 CEMENT LINED (PR4-A02)	C/51 CEMENT LINED	$ 17.24	5	$ 86.20
328	1187	PIPE 6IN D/I CEMENT LINED - CLASS 51 (PR4-C01)	C/51 CEMENT LINED	$ 18.49	1	$ 18.49
329	1188	PIPE 8IN DI C/51 CEMENT LINED (PR3-A01)	C/51 CEMENT LINED	$ 25.34	1	$ 25.34
330	2099	PIPE 10IN CLASS 51 EPOXY LINED - DI (PR3-C02)	C/51 EPOXY LINED	$ 59.23	1	$ 59.23
331	2100	PIPE 10IN CLASS 51 CEMENT LINE - DI (PR3-C01)	C/51 CEMENT LINED	$ 36.75	1	$ 36.75
332	2101	PIPE 12IN CLASS 51 EPOXY LINED - DI (PR3-D01)	C/51 EPOXY LINED	$ 67.56	1	$ 67.56
333	2102	PIPE 12IN CLASS 51 CEMENT LINE - DI (PR3-E01)	C/51 CEMENT LINED	$ 42.25	1	$ 42.25
334	2103	PIPE 16IN CLASS 51 EPOXY LINED - DI (YDP-03)	C/51 EPOXY LINED	$ 93.27	1	$ 93.27
335	2104	PIPE 16IN CLASS 51 CEMENT LINE - DI (YDP-01)	C/51 CEMENT LINED	$ 61.53	1	$ 61.53
336	2105	PIPE 20IN CLASS 51 EPOXY LINED - DI (YDP-02)	C/51 EPOXY LINED	$ 105.96	1	$ 105.96
337	2106	PIPE 20IN CLASS 51 CEMENT LIN - DI (YDP-04)	C/51 CEMENT LINED	$ 79.50	1	$ 79.50
338	2107	PIPE 18IN CLASS 51 EPOXY LINED - DI (YDP-06)	C/51 EPOXY LINED	$ 101.81	1	$ 101.81
339	2108	PIPE 18IN CLASS 51 CEMENT LINE - DI (YDP-05)	C/51 CEMENT LINED	$ 77.62	1	$ 77.62
340	2109	PIPE 24IN CLASS 51 EPOXY LINED - DI (YDP-07)	C/51 EPOXY LINED	$ 131.51	1	$ 131.51
341	2110	PIPE 24IN CLASS 51 CEMENT LINE - DI (YDP-08)	C/51 CEMENT LINED	$ 96.69	1	$ 96.69
342	5775	PIPE 8IN DI EPOXY LINED	EPOXY LINED	$ 34.77	1	$ 34.77
343	6104	PIPE 6" CL-51 DI EPOXY LINED (PR4-B01)	CL/51 EPOXY LINED	$ 33.45	18	$ 602.10
344		**4. SUBTOTAL**				**$ 1,750.92**
345		**5. FIRE HYDRANT & PARTS**				
346	131	COUPLING SAFETY STEM MUELLER 158259 - A-25 HYD PART (B02-01)	158259	$ 37.51	5	$ 187.55
347	132	NOZZLE LOCK 5 1/4 FIRE HYD (B02-14) 143137 A13	143137	$ 0.66	5	$ 3.30
348	133	PIN 3/32 X 1IN COTTER F/MUEL HYD - A29/195235 (B02-04)	A29/195235	$ 0.66	37	$ 24.42
349	134	PIN CLEVIS MUELLER HYD. A30 / 195234 (B02-03) 4 1/2" & 5 1/4"	195234	$ 6.53	4	$ 26.12
350	135	O-RING PUMPER NOZZLE A16 1988 - MULLER HYD. 5 1/4 (B02-07)	A16	$ 3.11	1	$ 3.11
351	136	O-RING BOTTOM SEAT MUELLER HYD. 4 1/2" A44 / 195161 (B02-06)	195161	$ 4.74	1	$ 4.74
352	137	O-RING BOTTOM SEAT MUELLER HYD. 5 1/4" A44 / 142893 (B02-05)	142893	$ 4.74	1	$ 4.74
353	138	O-RING M&H 5 1/4 1987 HYD A36 - 2-1/4 X 2-5/8 X 3/16 (B02-08)	A36	$ 2.81	2	$ 5.62
354	139	O-RING 4-1/2" & 5 1/4" T MUELLER HYD - A414 / 195271 (B02-09)	195271	$ 4.74	23	$ 109.02
355	140	O-RING HOLD DOWN NUT A3 / 194898 MUELLER 4 1/2" & 5 1/4"(B02-10)	194898	$ 4.74	24	$ 113.76
356	141	O-RING BONNET A5 / 142779 CENTURION, 4 1/2" & 5 1/4"(B02-16)	142779	$ 4.74	54	$ 255.96
357	142	WASHER ANTI-FRICTION A6 / 195546 CENTURION 4 1/2" & 5 1/4"(B02-15)	195546	$ 1.41	6	$ 8.46
358	143	GASKET 5-1/4 1988 MUELLER HYD A15 192345 CENTURION (S06-B44)	192345	$ 7.82	11	$ 86.02
359	144	HOOK S FOR HYD. 147738 (S06-B23)	147738	$ 1.23	51	$ 62.73
360	145	PLUG OIL BRASS A7 / 194932 4 1/2" & 5 1/4" (B02-12)	194932	$ 2.46	2	$ 4.92
361	171	O-RING 5 1/4 HYD HOUSING COVER B84B / 84-2-1 (B02-22)	B84B / 84-2-1	$ 5.69	1	$ 5.69
362	172	GASKET 5 1/4 HYD.HOUSING COVER B84B / 84-13 SEE PID# 622	B84B / 84-13	$ 5.69	1	$ 5.69
363	332	DIFFUSER 2 1/2 IN FOR HYDRANT - POLLARD P67501-100 (B13-A01)	P67501-100	$ 369.10	1	$ 369.10
364	548	OIL HYDRANT LUBE 1 GAL. - #51 (S15-A02)		$ 21.26	6	$ 127.56
365	573	OPERATING NUT 146430 4 1/2&5 1/4 SUPR CENTURION 1987 OR LATER (S06-B11)	146430	$ 120.18	1	$ 120.18
366	574	OPERATING NUT / BRASS - 4 1/2 & 5 1/4 CHATTANOOGA ST 175001 (S06-B14)	175001	$ 120.18	1	$ 120.18

ADDENDUM #2 - REVISED BID REPLY SPREADSHEET
E-BID #20120009

	A	B	E	G	H	I
367	576	PIN & COTTER PIN F/ROD/COUP - F/AMER/DARL HYD		$ 3.18	1	$ 3.18
368	577	COUPLING ROD BREAKABLE 5-1/4 - AMER DAR HYD B84B HRP-3009 (S06-B18)	B84B HRP-3009	$ 42.22	1	$ 42.22
369	579	OPERATING NUT 4-1/2 WEATHR CAP - CLOW EDDY 1977 (S06-B19)		$ 26.50	1	$ 26.50
370	580	CAP PUMPER NOZZLE - 5 1/4 MUELLER C/I (S06-B21)		$ 112.09	1	$ 112.09
371	581	SCREW OIL FOR HOLD DOWN NUT 4 1/2&5 1/4 STANDRD TRAFFIC 190702 (S06-B12)	190702	$ 1.03	1	$ 1.03
372	583	BOLT 1/2" x 3" FIRE HYDRANT - BREAK-AWAY TYPE 280049 (S06-B24)	280049	$ 5.32	24	$ 127.68
373	584	KIT REPAIR FOR 1989 4-1/2 M&H - HYDRANT/PART 442929 (S06-B27)	442929	$ 129.38	1	$ 129.38
374	585	GASKET 2-1/2IN RUBBER - HYDRANT FOR PART # 636,637,638,539 (S06-B28)		$ 0.91	11	$ 10.01
375	586	CHAIN & HOOK FOR 5-1/4 A-D - HYDRANT CAP		$ 9.74	1	$ 9.74
376	587	CAP HOSE 2-1/2" HYD AMER-DARLING 84-21 (S06-B20)	84-21	$ 62.53	1	$ 62.53
377	621	WEATHER SHIELD / RUBBER AMER. DARLING 84-144 5 1/4" (B02-26)	84-144	$ 8.18	1	$ 8.18
378	622	FIBER COVER GASKET AMER. DARLING 84-13 5 1/4" (B02-27)	84-13	$ 6.54	4	$ 26.16
379	640	HOLD DOWN NUT / BRASS MUELLER 107 HYD. 4", 5", 6" H-118 / 158383 (S06-B39)	158383	$ 40.67	1	$ 40.67
380	641	HOLD DOWN NUT 4 1/2 & 5 1/4CHATTANOOGA ST TRAFFIC (LEFT)175082 (S06-B13)	175082	$ 47.09	1	$ 47.09
381	642	HOSE NOZZLE 2 1/2 BRASS 4 1/2&5 1/4 CENTURION A18 STANDARD THREAD (S06-B42)	A18	$ 43.39	1	$ 43.39
382	643	PUMP NOZZLE 5 1/4 BRASS F/MUELLER 1988 HYD. A-14 (S06-B43)	A-14	$ 139.45	1	$ 139.45
383	647	ADAPTER HYD 2 1/2" X 3" SWIVEL (S06-B10)		$ 54.04	1	$ 54.04
384	727	HYDRANT EXTENSION 5 1/4" X 18" CLOW / MED "R1620666" (S10-D24)	R1620666	$ 273.38	1	$ 273.38
385	740	O-RING / SEAT 84-36-1 5 1/4" AMER. DARLING (B02-30)	84-36-1	$ 3.43	2	$ 6.86
386	757	VALVE / HYDRANT 84-41 5 1/4" AMER. DARLING (S06-C37)	84-41	$ 50.67	2	$ 101.34
387	758	O-RING / OPERATING NUT M-1/ T2400815 CLOW / MED. 5 1/4" (B02-32)	M-1/ T2400815	$ 3.11	11	$ 34.21
388	764	O-RING / THRUST NUT M-28 / T2400948 CLOW / MED. 5 1/4" (B02-33)	M-28 / T2400948	$ 3.11	22	$ 68.42
389	765	O-RING / STEM M-31 / T2401026 CLOW / MED. 5 1/4" (B02-34)	M-31 / T2401026	$ 3.11	6	$ 18.66
390	768	OPERATING NUT M-3 / 61CLM3 (RIGHT) CLOW / MED. 5 1/4" (S06-B09)	M-3 / 61CLM3	$ 140.64	1	$ 140.64
391	824	KIT SAFETY FLANGE REPAIR 4 1/2" MUELR195992 A300-00 PRE-1972 (S09-DC1)	195992	$ 151.27	1	$ 151.27
392	825	KIT SAFETY FLANGE 5 1/4" MUELLER RTS A301 1972-LATER HRPI-301 (S09-D02)	HRPI-301	$ 103.03	2	$ 206.06
393	826	KIT SAFETY FLANGE REPAIR 4 1/2" 1977 CLOW-EDDY F.H. (S09-D03)		$ 114.07	1	$ 114.07
394	827	HYDRANT 6" EXTENSION KIT 4 1/2 CLOW MEDALLION R1620658 (S09-D05)	R1620658	$ 185.34	1	$ 185.34
395	828	HYDRANT 6" EXTENSION KIT 4 1/2 CLOW/EDDY 1977 HYDRANT (S09-D06)		$ 185.34	1	$ 185.34
396	829	HYDRANT 12" EXTENSION KIT 4 1/2" CLOW/EDDY 1977 F.HYD (S09-D08)		$ 216.23	1	$ 216.23
397	830	HYDRANT 6" EXTENSION KIT 4 1/2" MUELLER STD. TRAFFIC A337 (S09-D11)	A337	$ 204.42	2	$ 408.84
398	831	HYDRANT 6" EXTENSION KIT 5 1/4" MUELLER SUPER FIRE HYD. HRPI-375 CENTURION IMPROVED (S09-D12)	HRPI-375	$ 224.87	1	$ 224.87
399	832	HYDRANT 12" EXTENSION KIT 4 1/2" 61MUA319010 / MUELLER SUPER HYD. A319 HRPI-374 CENTURION IMPROVED NEW STYLE (S09-D13)	A319 HRPI-374	$ 238.49	2	$ 476.98
400	833	HYDRANT 12" EXTENSION KIT 5 1/4" HRPI-375 A320-010 MUELLER SUPER FIRE HYDRANT CENTURION IMPROVED NEW STYLE (S09-D15)	HRPI-375 A320-010	$ 265.75	1	$ 265.75
401	1231	HYDRANT EXTENSION KIT 5 1/4" X 6" WATEROUS PACER WB AMER. DARLING (S09-D16)		$ 356.51	1	$ 356.51
402	1264	HYDRANT EXTENSION 4 1/2" X 12" (YD-19)		$ 216.23	1	$ 216.23
403	1265	HYDRANT GRADELOK 6" X 24" OFFSET SWIVEL JOINT (YD-08)		$ 352.52	1	$ 352.52
404	1266	HYDRANT EXTENSION 5 1/4" X 12" (YD-10)		$ 238.49	1	$ 238.49
405	1267	HYDRANT EXTENSION 4 1/2" X 18" STD TRAFFIC A337 (YD-07)	A337	$ 283.92	1	$ 283.92
406	1269	OFF-SET 6 X 18 IN MJ (YD-06)		$ 314.09	1	$ 314.09
407	1270	HYDRANT ADAPTER 6" X 13" SWIVEL SOLID MJ (YD-13)		$ 98.85	11	$ 1,087.35
408	1271	ELL-SWIVEL 90 6" X 13" MJ X HYD - D/I (YD-09)		$ 98.94	1	$ 98.94
409	1650	O-RING BONNET CLOW 5 1/4" HYD. 442 / M32 & M-47 (S06-B30)	M32 & M-47	$ 2.13	1	$ 2.13
410	1651	O-RING RUBBER CLOW 5 1/4" HYD. 444 / M-53 T2401040 (S06-B29)	T2401040	$ 2.13	1	$ 2.13
411	2169	KIT REPAIR 4 1/2" MAIN VALVE R1620654 / CLOW MED (S09-C08)	R1620654	$ 69.92	1	$ 69.92
412	2170	KIT REPAIR 5 1/4" MAIN VALVE 1620655 CLOW MED. (S09-C09)	R1620655	$ 69.92	66	$ 4,614.72
413	2496	KIT REPAIR 5 1/4" FIRE HYD - AMER DARLING B84B HRPI-473-584 (S09-D04)	B84B HRPI-473-584	$ 91.17	1	$ 91.17
414	2683	HYDRANT 12" EXTENSION KIT 5 1/4" CLOW MEDALLION HRPI-475 R1620665 (S09-D09)	R1620665	$ 240.95	4	$ 963.80
415	2692	HYDRANT 12" EXTENSION KIT 4 1/2" MUELLER SUPER A337 / 61MUA337010 STANDARD TRAFFIC IMPROVED NEW STYLE (S09-D14)		$ 305.31	5	$ 1,526.55
416	3269	FIRE HYD 4 1/2" MUELLER W 42 B - 604426M3A421	604426M3A421	$ 1,426.42	1	$ 1,426.42
417	3465	HYDRANT 12" EXTENSION KIT 4-1/2 MK73 AM DARLING 5-1/2 B84-B (S09-D07)	B84-B	$ 177.17	1	$ 177.17
418	3521	PIN COTTER SS 3/32" X 1" T0400980 CLOW HYD.	T0400980	$ 0.66	1	$ 0.66
419	3522	PIN SS 4 1/2" & 5 1/4" CLOW HYD. T0400891 (B02-11)	T0400891	$ 2.67	11	$ 29.37
420	3523	COUPLING MEDALN 4 1/2" & 5 1/4" (B02-13) M2202349	M2202349	$ 32.56	1	$ 32.56
421	3692	KIT REPAIR SAFETY FLANGE 5 1/4" CLOW MED. R1620653 (S09-C10)	R1620653	$ 103.03	2	$ 206.06
422	3801	MAIN VALVE RING 4 1/2" RUBBER MUELLER H-88 IMPROVED / 195800 (B02-25)	195800	$ 40.88	2	$ 81.76
423	3921	DRAIN VALVE FACING MUELLER H-81 IMPROVED 4 1/4", 4 1/2", 5 1/4" 192447 (S06-B46)	192447	$ 4.54	1	$ 4.54
424	3922	MAIN VALVE 4 1/4" RUBBER H-88 IMPROVED 190435 MUELLER HYD (S06-B45)	190435	$ 63.08	1	$ 63.08
425	5082	GASKET 3 1/8" OD RUBBER HYD. HOSE CAP T0600547 (S06-B40)	T0600547	$ 1.07	49	$ 52.43
426	5083	GASKET 5 3/4" OD RUBBER HYD. STMR CAP T0600548 (S06-B41)	T0600548	$ 3.20	21	$ 67.20
427	5084	STEM UPPER 5 1/4" HYDRANT - F/1987 MUELLER 42IN		$ 106.45	1	$ 106.45
428	5085	STEM LOWER 5 1/4" HYDRANT - F/1987 MUELLER 42IN		$ 78.34	1	$ 78.34
429	5128	FIRE HYD. 5 1/4" CLOW 54" BURY 605546M3 CLMED (YD-05)	605546M3	$ 1,369.64	1	$ 1,369.64
430	5167	FIRE HYD 5 1/4" CLOW 48" BURY 605486M3 CLMED (YD-87)	605486M3	$ 1,320.80	6	$ 7,924.80
431	5552	FIRE HYD. 5 1/4" CLOW RED 30" BURY		$ 1,249.25	1	$ 1,249.25

ADDENDUM #2 - REVISED BID REPLY SPREADSHEET
E-BID #20120009

	A	B	E	G	H	I
432	5684	HYDRANT EXTENSION KIT 12" KENNEDY HYD - MODEL K81A 5 1/4"	K81A	$ 211.60	1	$ 211.60
433	5779	HYDRANT EXTENSION KIT 12" KENNEDY 81A PART 61KEK81A EXT125	61KEK81A	$ 224.05	1	$ 224.05
434	5801	HYDRANT EXTENSION 12" 4 1/2" X 12" MUELLER A322 NON-TRAFFIC	A322	$ 265.66	1	$ 265.66
435	5817	CHAIN (ONLY) FOR FIRE HYDRANT CAPS - M-44 T1600709 (S06-B22)	T1600709	$ 2.91	64	$ 186.24
436	5831	HYDRANT 6" EXTENSION 5 1/4" VO R1620664 61CLR1620664 CLOW MEDALLION HRPI-475 (S09-D10)	R1620664	$ 203.88	1	$ 203.88
437	5915	FIRE HYD. 5 1/4" CLOW 60" BURY		$ 1,590.76	1	$ 1,590.76
438	5990	O-RING STEM 4 1/2" & 5 1/4" CENTURION A12 / 194514 (B02-02)	194514	$ 4.74	31	$ 146.94
439	6052	FIRE HYD. 42" 5-1/4 CLOW 2546-5B (YD-03)	2546-5B	$ 1 461.29	4	$ 5,845.16
440	6056	OPERATING NUT 4 1/2" & 5 1/4" CENTURION 158477 (S06-B17)	158477	$ 120.18	1	$ 120.18
441	6057	WEATHER CAP 4 1/2 & 5 1/4 CENTURION 142818 LEFT (S06-B16)	142818	$ 18.39	1	$ 18.39
442	6058	HOLD DOWN NUT / CENTURION 146501 / LEFT (S06-B15)	146501	$ 38.18	1	$ 38.18
443	6062	WEATHER SHIELD / RUBBER AMER. DARLING 84-144 6" (B02-19)	84-144	$ 6.50	2	$ 13.00
444	6063	FIBER COVER GASKET AMER. DARLING 84-13 6" (B02-20)	84-13	$ 6.54	1	$ 6.54
445	6087	OPERATING NUT THRUST WASHER T-020-0569 (B02-17)	T-020-0569	$ 3.60	11	$ 39.60
446	6089	O-RING THRUST NUT M-28 T-240-0948 (B02-18)	T-240-0948	$ 3.11	17	$ 52.87
447	6090	O-RINGS STEM M-31 T-240-1026 (B02-23)	T-240-1026	$ 3.11	1	$ 3.11
448		**5. SUBTOTAL**		$ -		**$ 37,664.83**
449		**6. FLO-CONTROL HOT TAP SADDLES ONLY**				
450	741	SADDLE HOT TAP 2x1-1/2INx2IN - 3220 FLO CONTROL * 5/BX* (S05-F01)	3220 FLO CONTROL	$ 47.97	61	$ 2,926.17
451	742	SADDLE HOT TAP 2-1/2x1-1/2IN - 3225 FLO CONTROL *5/BX* (S05-F02)	3225 FLO CONTROL	$ 49.57	128	$ 6,344.96
452	743	SADDLE HOT TAP 3 x 1-1/2IN - 3230 FLO CONTROL *5 PER BX* (S05-F03)	3230 FLO CONTROL	$ 53.00	59	$ 3,127.00
453	744	SADDLE HOT TAP 4x1-1/2IN - 3240 FLO CONTROL *5 PER BX* (S05-F04)	3240 FLO CONTROL	$ 57.83	21	$ 1,214.43
454	745	SADDLE HOT TAP 6x1-1/2IN - 3260 FLO CONTROL *5 PER BX* (S05-F05)	3260 FLO CONTROL	$ 78.19	11	$ 860.09
455	2213	SADDLE HOT TAP 8x1-1/2-2 - FLO CTL-3280 (S0F-F08)	3280	$ 103.03	1	$ 103.03
456	3175	SADDLE HOT TAP 6x1-1/2-2 C-900 - 9260 FLO CONTROL (S05-F07)	9260	$ 78.19	5	$ 390.95
457	3176	SADDLE HOT TAP 8 x 1-1/2 C-900 - FLO CONTROL #9280	9280	$ 105.19	1	$ 105.19
458	5027	SADDLE HOT TAP 4 X 1 1/2IN-2 F/C-900 PIPE P/N9240 (S05-F06)	9240	$ 72.55	1	$ 72.55
459	5888	SADDLE WEDGE 225 - 225 WEDGE (S05-E13)	225 WEDGE	$ 4.82	1	$ 4.82
460	5889	SADDLE WEDGE 380 - 380 WEDGE (S05-E14)	380 WEDGE	$ 7.33	1	$ 7.33
461	5890	SADDLE WEDGE 480 - 480 WEDGE (S05-E15)	480 WEDGE	$ 4.38	1	$ 4.38
462		**6. SUBTOTAL**				**$ 15,160.90**
463		**7. GENERAL ITEMS**				
464	61	SPRING FOR CLOW 3" CHECK VALVE T-120-0120 (B01-D13)	T-120-0120	$ 47.09	4	$ 188.36
465	76	SPRING FOR CLOW 4" CHECK VALVE T-120-0086 (B01-D14)	T-120-0086	$ 47.09	12	$ 565.08
466	77	SPRING FOR CLOW 6" CHECK VALVE T-120-0038 (B01-D15)	T-120-0038	$ 47.09	2	$ 94.18
467	326	TEFLON 8 OZ PACKING & - MOLDING COMPOUND (B08-A01)		$ 8.56	1	$ 8.56
468	327	LUBRICANT PIPE JOINT 2 LB - 29APLQ (B13-E02)	29APLQ	$ 3.12	1	$ 3.12
469	360	CEMENT PORTLAND TYPE II SKU# 169-846 (S01-D02)	SKU# 169-846	$ 8.72	2	$ 17.44
470	549	METER LOCKSEAL HEAD - 93280148 ALUM. SEAL (S15-A03)	93280148	$ 1.07	3311	$ 3,542.77
471	550	METER LOCK STUD X-LONG 1-1/2 - 93210142 REGULAR DIA (S15-A04)	93210142	$ 1.11	3171	$ 3,519.81
472	551	LOCK 3/4IN JONES - J-288 (S15-A05)	J-288	$ 23.43	1	$ 23.43
473	552	LOCK 3/4IN FOR ANGLE VALVE (S15-A06)		$ 18.90	1	$ 18.90
474	553	LOCK 1IN JONES		$ 18.90	1	$ 18.90
475	558	GASKET WASHER 3/4 x 1/16IN - RUBBER (S06-B01)		$ 0.06	711	$ 42.66
476	559	GASKET WASHER 3/4 x 1/8IN - RUBBER (S06-B02)		$ 0.07	4111	$ 287.77
477	560	WASHER-PAPER/FIBER 3/4 X 1/16 - PAPER (S06-B03)		$ 0.09	1	$ 0.09
478	562	GASKET WASHER 1 x 1/16IN - RUBBER (S06-B05)		$ 0.09	1	$ 0.09
479	563	GASKET WASHER 1 x 1/16IN - PAPER (S06-B06)		$ 0.07	1	$ 0.07
480	564	GASKET WASHER 1 x 1/8IN - RUBBER (S06-B07)		$ 0.08	211	$ 16.88
481	812	CAP 4IN DAY PVC (S09-A09)		$ 1.77	7	$ 12.39
482	813	CAP 6IN DAY PVC SDR26 - TEMP PIPE PLUG #2706 (S09-A10)	2706	$ 2.63	4	$ 10.52
483	814	PLUG TEST PNEUMATIC 4IN - 262-048 (S09-A11)	262-048	$ 103.06	1	$ 103.06
484	815	PLUG TEST PNEUMATIC 6IN - 262-064 (S09-A12)	262-064	$ 121.80	1	$ 121.80
485	816	PLUG TEST PNEUMATIC 8IN - 262-080 (S09-A13)	262-080	$ 153.32	1	$ 153.32
486	817	PLUG TEST PNEUMATIC 10IN - 262-110 (S09-A14)	262-110	$ 201.87	1	$ 201.87
487	875	GASKET RUBBER 12.75 - F/STEEL COUPLING (S10-A31)		$ 13.47	1	$ 13.47
488	876	GASKET RUBBER 14.21-14.40 - F/STEEL COUPLING (S10-A30)		$ 13.47	1	$ 13.47
489	2010	VALVE BOX SEWER WITH COVER - 75RC7635 (S07-E07)	75RC7635	$ 149.35	1	$ 149.35
490	2152	PRECO PLUG 5/GAL BUCKET - 96THOROC (S13-E04)	96THOROC	$ 26.12	6	$ 156.72
491	2201	GASKET 12 X 1/8 IN RED RUBBER - 12 HOLE F/F FG 12 (S11-B14)		$ 4.71	2	$ 9.42
492	2680	NUT OPERATING 2 SQ.IN. FOR 4IN - CLOW MJ GATE VALVE (S09-A04)		$ 14.95	1	$ 14.95
493	3807	VALVE BOX WATER WITH COVER P/N=7630-125 (S07-E08)	7630-125	$ 138.86	2	$ 277.72
494	5473	LOCK SEAL SHANK - LONG - PART #65FMLSSL	65FMLSSL	$ 3.00	1	$ 3.00
495	5811	CUTTER RATCHET FOR RS-1 - REED 94051 (B02-82)	94051	$ 29.20	1	$ 29.20
496	5812	CUTTER SPRING FOR RS1 - 40142 REED (B02-80)	40142	$ 10.30	1	$ 10.30
497	5813	CUTTER NUT FOR RS-1 - REED 30088 (B02-81)	30088	$ 0.27	1	$ 0.27
498	5814	CUTTER SPRING FOR RS2 - 40164 REED (B02-79)	40164	$ 13.74	1	$ 13.74
499	5982	CONCRETE MIX 80 LB BAG (SAKRETE)		$ 4.10	1	$ 4.10
500	6018	GREASE HYDRANT PETRO BLEND FG-2 (S09-B10)	FG-2	$ 15.12	242	$ 3,659.04
501	6068	MARKER WATER BALL 3M 1403XR *30 PER BX* (S09-C03)	1403XR	$ 7.85	571	$ 4,482.35
502	6069	MARKER SEWER BALL 3M 1404XR *30 PER BX* (S09-C07)	1404XR	$ 7.85	726	$ 5,699.10
503	6084	GASKET 16" X 1/8" RED RUBBER (S11-B13)		$ 9.36	1	$ 9.36
504		**7. SUBTOTAL**				**$ 23,496.63**

ADDENDUM #2 - REVISED BID REPLY SPREADSHEET
E-BID #20120009

	A	B	E	G	H	I
505		**8. LIFT STATION PARTS / US FOUNDRY OR APPROVED EQUAL**				
506	**808**	RAIN GUARD SEWER MANHOLE W/STR - 22 1/2IN OD W/STRAP (S09-A01)		$ 31.80	1	$ 31.80
507	**1262**	RISER MANHOLE 23 1/2 X 1 1/2 - FOR 1 1/4 IN LID (YD-97)		$ 112.43	1	$ 112.43
508	**1274**	MANHOLE RING AND LID - USF-465B *DON'T RE-ORDER* (YD-101)		$ 252.12	3	$ 756.36
509	**1275**	MANHOLE RING & LID 24" * CDPA60EHSSE * SANITARY SEWER (YD-102)	CDPA60EHSSE	$ 283.92	1	$ 283.92
510	**3625**	RISER MANHOLE 22-3/4ID x 1-1/2 - FOR 2IN LID (YD-96)		$ 201.53	1	$ 201.53
511	**3626**	RISER MANHOLE 22-3/4ID x 2-1/2 - FOR 2IN LID		$ 267.36	1	$ 267.36
512	**3731**	RISER MANHOLE 24 X 1 1/2 IN - FOR 1 1/4 IN LID (YD-98)		$ 116.98	1	$ 116.98
513	**5079**	RISER MANHOLE 22-3/4ID x 1IN FOR 2IN #465 LID (YD-94)		$ 112.43	2	$ 224.86
514	**5742**	RISER MANHOLE 22-3/4ID x 2IN - FOR 2IN LID (YD-95)		$ 140.82	1	$ 140.82
515		**8. SUBTOTAL**				**$ 2,136.06**
516		**9. METER BOXES & LIDS**				
517	**354**	LID ONLY SINGLE PLASTIC W/CI/R - 1419H	1419H	$ 11.72	1	$ 11.72
518	**355**	LID ONLY DOUBLE PLASTIC W/CI R - 1220H	1220H	$ 26.26	1	$ 26.26
519	**356**	LID ONLY SGL/CI W/CI READER - 36T (YD-78)	36T	$ 54.51	3	$ 163.53
520	**357**	LID ONLY /DUAL-H C.I. COVER (YD-82)		$ 63.60	3	$ 190.80
521	**420**	METER BOX JUMBO PLASTIC - W/CI READER LID (YD-02)		$ 89.72	1	$ 89.72
522	**1276**	METER BX DBL CONCRETE / NO LID (YD-86)		$ 28.39	13	$ 369.07
523	**1278**	METER BX JUMBO CONCRETE (YD-84)		$ 85.18	1	$ 85.18
524	**1280**	LID ONLY JUMBO CONCRETE - W / CONCRETE READER (YD-77)		$ 72.68	3	$ 218.04
525	**1281**	METER BOX SINGLE W/READ LID CONCRETE (YD-85)		$ 47.70	5	$ 238.50
526	**1282**	LID ONLY DOUBLE CONCRETE - DUAL H/CI W/READER (YD-81)	DUAL H	$ 50.62	27	$ 1,366.74
527	**1283**	LID SINGLE CONCRETE W/CI READ - 36H (YD-83)	36H	$ 24.42	4	$ 97.68
528	**3189**	LID SINGLE CONC. SOLID - 36H (YD-79)	36H	$ 23.85	1	$ 23.85
529	**5959**	LID, METER BOX WC00-1118-2C (YD-80)	WC00-1118-2C	$ 27.20	1	$ 27.20
530	**6048**	LID ONLY DOUBLE/SOLID PLASTIC/OVERLAPPING 117CW (YD-15)	117CW	$ 10.86	1576	$ 17,115.36
531	**6049**	LID ONLY SINGLE / SOLID OVERLAPPING / PLASTIC 113CW (YD-01)	113CW	$ 5.49	611	$ 3,354.39
532	**6050**	METER BOX COMPLETE/DOUBLE / SOLID OVERLAPPING LID 117B12CW-3 (YD-16)	117B12CW-3	$ 28.63	1624	$ 46,495.12
533	**6051**	METER BOX COMPLETE/SINGLE / SOLID OVERLAPPING LID 113BCW (YD-17)	113BCW	$ 13.88	546	$ 7,578.48
534		**9. SUBTOTAL**				**$ 77,451.64**
535		**10. METERS, WATER & ALL PARTS**				
536	**3**	BACKFLOW 3/4IN PREV. RPZ WILKINS 975 XL (S10-B01)	975XL	$ 127.96	32	$ 4,094.72
537	**646**	BACKFLOW 1IN PREVENTER RPZ WILKINS 975XL BRASS (S10-B02)	975XL	$ 134.50	19	$ 2,555.50
538	**650**	BACKFLOW 2IN PREVENTER RPZ - WILKINS 975XL BRASS (S10-B04)	975XL	$ 298.97	13	$ 3,886.61
539	**5408**	LOCK SEAL KEY 93280139 - 65FMLSK (PC-B03)	65FMLSK	$ 3.86	68	$ 262.48
540	**5608**	BACKFLOW 1-1/2IN RPZ PREVENTER - WILKINS 975XL BRASS (S10-B03)	975XL	$ 252.18	3	$ 756.54
541		**10. SUBTOTAL**				**$ 11,555.85**
542		**11. PIPE, PVC 40, C900**				
543	**1093**	PIPE 1/2IN SCH40 PVC - 20FT LENGTHS (PR1-B01)		$ 0.24	481	$ 115.44
544	**1094**	PIPE 3/4IN SCH40 PVC - 20FT SILVER LINE (PR5-D01)		$ 0.26	22511	$ 5,852.86
545	**1095**	PIPE 1IN SCH40 PVC - 20FT SILVER LINE (PR2-E01)		$ 0.43	2211	$ 950.73
546	**1096**	PIPE 3IN SCH40 PVC SILVER LINE (PR4-D01)		$ 1.39	6141	$ 8,535.99
547	**1097**	PIPE 2IN SCH40 PVC - 20FT SILVER LINE (PR7-D01)		$ 0.72	811	$ 583.92
548	**1098**	PIPE 1-1/4IN SCH40 PVC SILVER LINE (PR2-D01)		$ 0.49	3261	$ 1,597.89
549	**1099**	PIPE 2-1/2IN SCH40 PVC - 20FT SILVER LINE (PR7-C01)		$ 1.34	1	$ 1.34
550	**1100**	PIPE 1-1/2IN SCH40 PVC - 20FT SILVER LINE (PR5-C01)		$ 0.51	22581	$ 11,516.31
551	**1101**	PIPE 4IN SCH40 PVC SILVER LINE (PR4-E01)		$ 1.94	1541	$ 2,989.54
552	**1102**	POLY TUBING 1-1/2IN 200 PSI - 100 FT ROLL (PR7-I01)		$ 0.68	1	$ 0.68
553	**1103**	POLY TUBING 2IN 200 PSI - 100FT ROLLS (PR7-H01)		$ 1.27	175	$ 222.25
554	**1107**	POLY TUBING 1IN 200 PSI - 300FT ROLL DRISCO (YD-105)		$ 0.34	12311	$ 4,185.74
555	**1183**	PIPE 8IN X 14FT SEWER SDR26 (PR6-J01)	SDR-26	$ 6.20	9	$ 55.80
556	**1184**	PIPE 8IN DR 18-C-900 BLUE PVC (PR6-E01)	DR 18-C-900	$ 9.94	33	$ 328.02
557	**1189**	PIPE 4IN DR18 C-900 BLUE PVC (PR6-C01)	DR18 C-900	$ 2.87	51	$ 146.37
558	**1190**	PIPE 6IN DR-18 C900 BLUE PVC (PR6-D01)	DR-18 C900	$ 5.75	122	$ 701.50
559	**1191**	PIPE 4IN X 14FT SEWER SDR26 (PR6-H01)	SDR-26	$ 1.58	9	$ 14.22
560	**1192**	PIPE 6IN X 14FT SEWER SDR26 (PR6-I01)	SDR-26	$ 3.44	42	$ 144.48
561	**1402**	PIPE 6IN SCH40 PVC (PR7-B01)		$ 4.92	58	$ 285.36
562	**1407**	PIPE 8IN SCH40 PVC - C508040 (PR7-A01)		$ 5.55	1	$ 5.55
563	**2095**	PIPE 18IN DR18 BLUE C905 CL235 (YDP-15)	DR18	$ 43.68	1	$ 43.68
564	**2096**	PIPE 18IN DR18 GREEN C905 CL235	DR18	$ 45.97	1	$ 45.97
565	**2097**	PIPE 24IN DR18 BLUE C905 CL235 (YDP-17)	DR18	$ 77.48	1	$ 77.48
566	**2098**	PIPE 24IN DR18 [MARKED W/GREEN (YDP-14)	DR18	$ 81.54	1	$ 81.54
567	**2111**	PIPE 12IN DR18 BLUE C900 CL150 - 021218B (PR6-F01)	DR18	$ 21.07	74	$ 1,559.18
568	**2112**	PIPE 10IN DR18 BLUE C900 CL150 (PR7-F01)	DR18	$ 14.92	1	$ 14.92
569	**2113**	PIPE 16IN DR18 BLUE C905 CL235 (YDP-11)	DR18	$ 34.65	1	$ 34.65
570	**2114**	PIPE 20IN DR18 BLUE C905 CL235 (YDP-16)	DR18	$ 53.89	1	$ 53.89
571	**2115**	PIPE 10IN DR18 GREEN C900 CL150 (YDP-09)	DR18	$ 15.71	1	$ 15.71
572	**2116**	PIPE 12IN DR18 GREEN C900 CL150	DR18	$ 22.17	1	$ 22.17
573	**2117**	PIPE 16IN DR18 GREEN C905 CL235 (YDP-12)	DR18	$ 36.47	1	$ 36.47
574	**2118**	PIPE 20IN DR18 GREEN C905 CL23 (YDP-10)	DR18	$ 56.72	5	$ 283.60
575	**5770**	POLY TUBING 3/4IN 200 PSI - 100FT ROLL (S04-E04)		$ 0.19	6	$ 1.14
576	**5895**	PIPE 20IN DR25 GREEN C905 (YDP-13)	DR25	$ 41.28	1	$ 41.28
577		**11. SUBTOTAL**				**$ 40,545.67**

ADDENDUM #2 - REVISED BID REPLY SPREADSHEET
E-BID #20120009

	A	B	E	G	H	I
578		**12. PLUMBING PARTS / STREAMLINE-MUELLER OR APPROVED EQUAL**				
579	**777**	TEE 3/4 X 3/4 X 3/4 COPPER WB04031 (S12-D48)	WB04031	$ 2.21	15	$ 33.15
580	**2824**	ESCUTCHEON PLATE-WHITE PVC 3/4" HOLE/PVC PIPE *921-3W* (S12-D36)	921-3W	$ 0.17	25	$ 4.25
581	**5263**	ADAPTER 3/4IN MPT X COPPER - W1146 (S12-D38)	W1146	$ 1.89	118	$ 223.02
582	**5264**	ADAPTER REDUCER 3/4 MPT X 1/2IN C - W1130 COPPER (S12-D37)	W1130	$ 3.28	4	$ 13.12
583	**5265**	ELL 90 DEG 3/4IN COPPER CxC - C9F - W1634 (S12-D39)	W1634	$ 1.20	61	$ 73.20
584	**5267**	FLUX WATER SOLUBLE 16OZ PASTE - 30133 Oatey (S12-D46)	30133 Oatey	$ 7.63	12	$ 91.56
585	**5321**	ESCUTCHEON PLATE 3/4" CHROME - E01075 25/BX (S12-D44)	E01075	$ 0.37	1	$ 0.37
586	**5322**	ESCUTCHEON PLATE - WHITE PVC 3/4in HOLE / COPPER * 920-3W * (S12-D43)	920-3W	$ 0.85	11	$ 9.35
587	**5323**	ADAPTER 3/4IN MPT BRASS x FS - CPVC 6033 (S12-D45)	CPVC 6033	$ 9.28	3	$ 27.84
588	**5362**	CAP 3/4IN COPPER - W7009 (S12-D42)	W7009	$ 0.73	2	$ 1.46
589	**5750**	COUPLING 3/4IN COPPER CxC - CCF- WBO1034 (S12-D40)	WBO1034	$ 0.82	27	$ 22.14
590	**5751**	ELL 45 DEG 3/4IN COPPER CxC - C4F- W3034 (S12-D41)	W3034	$ 1.73	1	$ 1.73
591	**5752**	ADAPTER 3/4IN COPPER CxF - CFAF- W1246 (S12-C33)	W1246	$ 2.45	129	$ 316.05
592	**5753**	REDUCER 1x3/4IN COPPER FTGxC - BUSHING -CRCGF- W1337 (S12-C32)	W1337	$ 1.44	1	$ 1.44
593	**5754**	UNION 3/4IN COPPER CxC - CUF- W8004 (S12-C35)	W8004	$ 7.37	1	$ 7.37
594	**5755**	PIPE 3/4IN COPPER - K HARD F20(PR1-D03)	K HARD	$ 4.03	141	$ 568.23
595	**5756**	COUPLING 1IN COPPER CxC - CCG- W1047 (S12-C36)	W1047	$ 1.64	1	$ 1.64
596	**5757**	ELL 90 DEG 1IN COPPER CxC - C9G- W1647 10/BX (S12-C38)	W1647	$ 2.96	11	$ 32.56
597	**5758**	ELL 45 DEG 1IN COPPER CxC - C4G- W3044 (S12-C37)	W3044	$ 4.34	1	$ 4.34
598	**5759**	ADAPTER 1IN COPPER CxM - CMAG- W1163 (S12-C39)	W1163	$ 4.88	91	$ 444.08
599	**5760**	ADAPTER 1IN COPPER CxF - CFAG- W1263 (S12-C40)	W1263	$ 5.67	21	$ 119.07
600	**5761**	UNION 1IN COPPER CxC - CUG- W8005 10/BX (S12-C41)	W8005	$ 12.40	4	$ 49.60
601	**5762**	PIPE 1IN COPPER - K HARD G20 (PR1-D02)	K HARD	$ 5.37	81	$ 434.97
602	**5764**	ELL 90 DEG 3/4IN COPPER FTGxC - STREET W1654(S12-C34)	W1654	$ 1.74	95	$ 165.30
603	**5765**	ELL 90 DEG 1IN COPPER FTGxC - STREET- CS9G- W2344 (S12-C42)	W2344	$ 4.51	28	$ 126.28
604	**5836**	PIPE 2IN COPPER K-HARD K20 (PR1-D01)	K-HARD	$ 13.16	21	$ 276.36
605	**5837**	COUPLING 2IN CxC COPPER - CCK- W1072 (S12-C46)	W1072	$ 6.39	4	$ 25.56
606	**5838**	ADAPTER MALE 2IN COPPER CxM - W1187 (S12-C45)	W1187	$ 14.05	7	$ 98.35
607	**5839**	ADAPTER FEMALE 2IN COPPER CxF - CFAK- W1287 (S12-C43)	W1287	$ 17.63	4	$ 70.52
608	**5840**	ELL 90 DEG. 2IN COPPER CxC - C9K- W2086 (S12-C44)	W2086	$ 12.73	7	$ 89.11
609		**12. SUBTOTAL**				**$ 3,332.02**
610		**13. PVC PARTS & FITTINGS / SPEARS OR APPROVED EQUAL**				
611	**105**	VALVE 3/4IN BALL SXS SCH40 PVC - 2622-007 *SPEARS* (S16-E43)	2622-007	$ 6.00	33	$ 198.00
612	**106**	VALVE BALL 1IN SXS SCH 40 2622-010 *SPEARS* (S16-E44)	2622-010	$ 7.76	6	$ 46.56
613	**361**	ADAPTER 4IN SCH40 TO 4IN SDR26 - PVC (S06-A06)	SDR-26	$ 4.75	31	$ 147.25
614	**362**	REDUCER 6x4IN SxG SDR-26 SEWER (S06-A03)	SDR-26	$ 17.63	2	$ 35.26
615	**363**	REDUCER 8x6IN GASKET ENDS - SDR-26 (S07-A17)	SDR-26	$ 35.36	1	$ 35.36
616	**364**	SADDLE WYE 8x4IN SEWER SDR-26 - GASKET END (S07-A19)	SDR-26	$ 17.74	1	$ 17.74
617	**369**	TEE 8x8x6IN SANITARY - BELL ENDS (S07-A16)		$ 38.03	1	$ 38.03
618	**372**	WYE 6x4IN SINGLE - PVC P601-532 *SPEARS* (S07-A21)	P601-532	$ 23.75	1	$ 23.75
619	**374**	WYE SEWER 6x4x4IN DOUBLE - SDR26 (S07-A20)	SDR-26	$ 39.61	3	$ 118.83
620	**376**	WYE 8x6IN SEWER SDR-26 - GASKET END (S07-A15)	SDR-26	$ 38.94	2	$ 77.88
621	**379**	PLUG 4IN SEWER SPIGOT - PVC (S06-A05)		$ 1.90	1	$ 1.90
622	**380**	CAP 6IN SEWER GASKET END SDR26 - PVC (S07-A25)	SDR-26	$ 19.44	1	$ 19.44
623	**382**	PLUG 6IN SEWER SPIGOT - PVC (S07-A24)		$ 3.15	6	$ 18.90
624	**384**	PLUG 8IN SEWER SPIGOT - SDR-26 (S07-A23)	SDR-26	$ 12.82	1	$ 12.82
625	**385**	COUPLING 4 X 4IN SDR 26 PVC - GASKET END (S06-A07)	SDR-26	$ 8.93	5	$ 44.65
626	**387**	COUPLING 6IN PVC FOR SDR26 - GASKET END (S06-A01)	SDR-26	$ 20.53	2	$ 41.06
627	**391**	ELL 22-1/2 DEG 4IN BELL X BELL - FOR SDR-26 (S06-A09)	SDR-26	$ 12.36	1	$ 12.36
628	**392**	ELL 45 DEG 4IN BELL X BELL PVC - SDR-26 (S06-A08)	SDR-26	$ 9.32	1	$ 9.32
629	**393**	ELL 45 DEG. 4IN BELL X SPIGOT - SDR-26 PVC (S06-A11)	SDR-26	$ 8.60	1	$ 8.60
630	**394**	ELL 45 DEG 6IN BELL X BELL PVC - SDR26 (S06-A02)	SDR-26	$ 17.07	1	$ 17.07
631	**395**	ELL 45 DEG 6IN BELL X SPICKET - 27064GS SDR 26 (S06-A16)	SDR-26	$ 13.47	6	$ 80.82
632	**396**	CLEAN OUT 4 IN S-SDR 26 X THRD - SCH40 PVC *PER EA.* (S06-A12)	SDR-26	$ 2.15	5	$ 10.75
633	**397**	PLUG 3IN THRD SCH40 *FLUSH* - P110-030 CLEANOUT 50/BX *SPEARS* (S06-A13)	P110-030	$ 1.43	317	$ 453.31
634	**398**	PLUG 4IN THRD SCH40 *FLUSH* - P110-40 25/BX *SPEARS* (S06-A14)	P110-40	$ 1.40	158	$ 221.20
635	**399**	PLUG 6IN THRD SCH 40 FLUSH - P110-060 *SPEARS* (S06-A15)	P110-060	$ 3.13	11	$ 34.43
636	**400**	ADAPTER FEMALE 6IN SCH40 PVC - 435-060 *SPEARS* (S06-A32)	435-060	$ 9.06	3	$ 27.18
637	**401**	ADAPTER MALE 6IN SCH/40 436-060 *SPEARS* S06-A31)	436-060	$ 8.43	1	$ 8.43
638	**402**	CAP 6IN SLIP SCH 40 447-060 *SPEARS* (S06-A30)	447-060	$ 8.92	2	$ 17.84
639	**403**	COUPLING 6IN SCH 40 SXS PVC 429-060 *SPEARS* (S06-A29)	429-060	$ 8.64	2	$ 17.28
640	**404**	COUPLING 6IN COMP. SCH40 - 0110-60 *SPEARS* (S06-A28)	0110-60	$ 58.98	1	$ 58.98
641	**405**	ELL 45 DEG 6IN SXS SCH 40 PVC 417-060 * SPEARS* (S06-A27)	417-060	$ 19.17	2	$ 38.34
642	**406**	ELL 90 6IN SxS SCH40 406-060 *SPEARS* (S06-A26)	406-060	$ 18.94	6	$ 113.64
643	**407**	REDUCER 6x4IN SxS SCH40 - 437-532 *SPEARS* (S06-A25)	437-532	$ 8.95	8	$ 71.60
644	**408**	TEE 6IN SLIP SCH40 - 401-060 *SPEARS* (S06-A24)	401-060	$ 29.75	1	$ 29.75
645	**410**	COUPLING 8IN SCH 40 SXS - 429-080 *SPEARS* (S06-A21)	429-080	$ 16.14	1	$ 16.14
646	**411**	ELL 45 DEG 8IN SXS SCH 40 - 417-080 *SPEARS* (S06-A20)	417-080	$ 46.10	1	$ 46.10
647	**421**	COUPLING 4IN SXS SCH40 PVC 429-040 *SPEARS* *6/BX* (S05-A01)	429-040	$ 2.74	119	$ 326.06
648	**422**	ELL 22-1/2 DEG 4IN SxS SCH40 - 416-040 *SPEARS*	416-040	$ 11.08	1	$ 11.08
649	**423**	ELL 45 DEG 4IN SxS SCH40 PVC - 417-040 *SPEARS*	417-040	$ 7.76	1	$ 7.76
650	**424**	ELL 90 4IN SxS SCH40 PVC 406-040 *SPEARS* (S05-A03)	406-040	$ 5.95	11	$ 65.45
651	**425**	PLUG 4 IN THRD SCH40 PVC *5 PER BX* (S05-A04)		$ 5.04	1	$ 5.04

ADDENDUM #2 - REVISED BID REPLY SPREADSHEET
E-BID #20120009

	A	B	E	G	H	I
652	426	REDUCER 4INx3IN SLIP SCH40 PVC 437-422 *SPEARS* *6/BX* (S05-A07)	437-422	$ 3.61	33	$ 119.13
653	427	TEE 4IN SLIP SCH40 PVC 401-040 *SPEARS* (S05-A13)	401-040	$ 8.85	2	$ 17.70
654	428	VALVE 4IN CHECK SxS SCH40 - S475P PVC (S05-A14)	S475P	$ 21.02	1	$ 21.02
655	429	WYE 4 IN SINGLE DWV PVC (S05-A15)		$ 13.11	5	$ 65.55
656	430	COUPLING 3IN SxS SCH40 PVC 429-030 *SPEARS* *10/BX* (S05-B01)	429-030	$ 1.89	194	$ 366.66
657	431	ELL 22-1/2 DEG 3IN SxS SCH40 - 416-030 *SPEARS*	416-030	$ 6.18	1	$ 6.18
658	432	ELL 45 DEG 3IN SxS SCH 40 PVC - 417-030 *SPEARS*	417-030	$ 4.33	1	$ 4.33
659	433	ELL 90 3IN S X S SCH40 PVC 406-030 * SPEARS*	406-030	$ 3.33	1	$ 3.33
660	434	PLUG 3IN THRD SCH40 PVC (S05-B04)		$ 2.23	1	$ 2.23
661	436	REDUCER 3 X 1-1/2" SxS SCH40 437-337 *SPEARS* (S05-B05)	437-337	$ 1.61	1	$ 1.61
662	437	REDUCER 3 X 2IN SxS SCH40 - 437-338 (S05-B06)	437-338	$ 1.61	15	$ 24.15
663	438	TEE 3IN SLIP SCH 40 PVC - 401-030 *SPEARS* (S05-B07)	401-030	$ 4.88	1	$ 4.88
664	439	VALVE 3IN CHECK SxS SCH40 - PVC (S05-B08)		$ 26.97	1	$ 26.97
665	440	WYE 3IN SLIP - DWV SCH 40 P600-030 NON-PRESSURE *SPEARS* (S06-A04)	P600-030	$ 3.24	1	$ 3.24
666	441	ADAPTER 4IN FEMALE SCH40 PVC 435-040 *SPEARS* *6/BX* (S05-A08)	435-040	$ 3.38	147	$ 496.86
667	442	ADAPTER 4IN MALE SCH40 PVC 436-040 *SPEARS* *5/BX* (S05-A09)	436-040	$ 3.23	58	$ 187.34
668	443	CAP 4IN SLIP SCH 40 PVC 6/bx- 447-040 *SPEARS* (S05-A10)	447-040	$ 3.73	25	$ 93.25
669	444	CAP 4IN THREADED SCH40 PVC 448-030 6/bx (S05-A11)	448-030	$ 3.75	1	$ 3.75
670	445	COUPLING 4IN COMPRESSION PVC SCH-40 S110-40 *SPEARS* (S05-A12)	S110-40	$ 26.19	11	$ 288.09
671	446	ELL 22-1/2 DEG. 2IN SxS SCH40 - 416-020 *SPEARS* (S05-C02)	416-020	$ 1.53	2	$ 3.06
672	447	ELL 45 DEG. 2IN SxS SCH40 PVC 25bx- 417-020 *SPEARS* (S05-C03)	417-020	$ 1.07	46	$ 49.22
673	448	ELL 90 2IN S X FPT SCH40 PVC (S05-C04)		$ 1.95	4	$ 7.80
674	449	ELL 2IN 90 ST S X MPT SCH40 PVC (S05-C05)		$ 2.35	3	$ 7.05
675	450	ELL 90 2IN SXS SCH40 25/bx 406-020 *SPEARS* (S05-C06)	406-020	$ 0.92	41	$ 37.72
676	451	ELL 2IN 90 ST FPT X MPT SCH40 PVC (S05-C07)		$ 2.41	2	$ 4.82
677	452	PLUG THRD 2IN SCH40 - 450-020 10/BX *SPEARS* (S05-C08)	450-020	$ 1.06	14	$ 14.84
678	453	TEE 2IN SLIP SCH40 401-020 *SPEARS* (S05-C09)	401-020	$ 1.12	17	$ 19.04
679	454	VALVE 2IN CHECK SXS SCH 40 - 1520-020 (S05-C10)	1520-020	$ 15.13	4	$ 60.52
680	455	COUPLING 2-1/2IN SxS SCH40 PVC 429-025 *SPEARS* *12/BX* (S05-C24)	429-025	$ 1.20	4	$ 4.80
681	456	COUPLING 2-1/2IN COMP SCH40 S110-25 *SPEARS* *6/BX* (S05-C20)	S110-25	$ 12.19	1	$ 12.19
682	457	ADAPTER 3IN FEMALE SCH40 PVC 435-030 *SPEARS* *10/BX* (S05-B10)	435-030	$ 2.04	274	$ 558.96
683	458	ADAPTER 3IN MALE SCH40 PVC 436-030 *SPEARS* *10/BX* (S05-B12)	436-030	$ 2.53	83	$ 209.99
684	459	CAP 3IN SLIP SCH40 PVC 10/bx- 447-030 *SPEARS* (S05-B13)	447-030	$ 1.64	94	$ 154.16
685	460	CAP 3IN THREADED SCH40 PVC - 448-030 *SPEARS* (S05-B14)	448-030	$ 2.14	4	$ 8.56
686	461	COUPLING 3IN COMP SCH40 PVC - S110-30 *SPEARS* *4/BX* (S05-B15)	S110-30	$ 15.91	2	$ 31.82
687	462	ELL 90 1-1/2IN ST SxMPT SCH40 - 410-015 *SPEARS* (S05-D01)	410-015	$ 0.95	3	$ 2.85
688	463	ELL 90 1-1/2IN SXS SCH40 PVC 406-015 *SPEARS* *25/BX* (S05-D02)	406-015	$ 0.58	245	$ 142.10
689	464	SWEEP 90 1-1/2IN SxS SCH40 - D304-015 *SPEARS* (S05-D04)	D304-015	$ 1.02	16	$ 16.32
690	465	ELL 90 1-1/2IN ST MPTxFPT SCH40 - 412-015 *SPEARS* (S05-D05)	412-015	$ 1.26	1	$ 1.26
691	466	TEE 1-1/2IN SLIP SCH40 PVC 401-015 25/bx *SPEARS* (S05-D06)	401-015	$ 0.77	45	$ 34.65
692	467	PLUG 1-1/2IN THRD SCH40 PVC - 450-015 *SPEARS* (S05-D07)	450-015	$ 0.82	11	$ 9.02
693	468	VALVE BALL 1-1/2IN SxS SCH40 2622-015 *SPEARS* *20bx* (S05-D09)	2622-015	$ 15.67	243	$ 3,807.81
694	469	VALVE 1-1/2IN CHECK SXS 1520C-15 *CLEAR* FLO CONTROL *12BX* (S05-D10)	1520C-15	$ 12.02	329	$ 3,954.58
695	470	ADAPTER FEMALE 2IN SCH40 PVC 435-020 *SPEARS* *10/BX* (S05-C11)	435-020	$ 0.60	12	$ 7.20
696	471	ADAPTER 2IN MALE SCH40 PVC - 436-020 *SPEARS* *25/BX* (S05-C13)	436-020	$ 0.59	76	$ 44.84
697	472	REDUCER MALE 2x1-1/2 SxMPT 436-251 SCH40 *SPEARS* *10/BX* (S05-C19)	436-251	$ 1.42	9	$ 12.78
698	473	CAP 2IN SLIP SCH40 PVC 447-020 *SPEARS* *10 PER BX* (S05-C15)	447-020	$ 0.47	28	$ 13.16
699	474	CAP 2IN THREADED SCH40 448-020 10/BX *SPEARS* (S05-C16)	448-020	$ 1.11	11	$ 12.21
700	475	COUPLING 2IN COMP SCH40 PVC - 0110-20 *SPEARS* *12/BX* (S05-C12)	0110-20	$ 6.53	15	$ 97.95
701	476	COUPLING 2IN SCH40 SXS PVC - 429-020 *SPEARS* *25/BX* (S05-C17)	429-020	$ 0.55	52	$ 28.60
702	477	ELL 45 DEG 1IN SxS SCH40 PVC 50/bx- 417-010 *SPEARS* (S05-E01)	417-010	$ 0.47	95	$ 44.65
703	478	ELL 90 1IN SxFPT SCH40 PVC - 407-010 *SPEARS* (S05-E02)	407-010	$ 0.41	5	$ 2.05
704	479	ELL 90 1IN ST SxMPT SCH40 PVC 50/bx- 410-010 *SPEARS* (S05-E03)	410-010	$ 0.66	24	$ 15.84
705	480	ELL 90 1IN SxS SCH40 PVC - 406-010 *SPEARS* *50 PER BX* (S05-E04)	406-010	$ 0.31	421	$ 130.51
706	481	ELL 90 1IN STREET MPTxFPT SCH40 412-010 PVC (S05-E05)	412-010	$ 0.94	2	$ 1.88
707	482	ELL 90 1IN FPTxFPT SCH40 PVC (S05-E06)		$ 1.17	2	$ 2.34
708	483	PLUG 1IN SLIP SCH40 PVC 449-010 *SPEARS* (S05-E07)	449-010	$ 0.47	1	$ 0.47
709	484	PLUG 1IN THRD SCH40 PVC - 450-010 *SPEARS* (S05-E08)	450-010	$ 0.73	1	$ 0.73
710	485	TEE 1IN SLIP SCH40 PVC - 401-010 *SPEARS* *50 PER BX* (S05-E09)	401-010	$ 0.41	59	$ 24.19
711	486	COUPLING 1-1/4IN SXS SCH40 PVC - 429-012 *SPEARS* 25BX (S05-E10)	429-012	$ 0.33	1149	$ 379.17
712	487	ADAPTER MALE HOSE 1-1/2IN PVC - 1436-015 25/BX *SPEARS* (S05-D08)	1436-015	$ 1.18	52	$ 61.36
713	488	ADAPTER 1-1/2IN FEMALE SCH40 - 435-015 *SPEARS* *25/BX* (S05-D11)	435-015	$ 0.44	35	$ 15.40
714	489	ADAPTER 1-1/2IN MALE SCH40 PVC 436-015 SPEARS 25/BX (S05-D12)	436-015	$ 0.44	261	$ 114.84
715	490	REDUCER ADAPT 1-1/4 x 1-1/2 SxMPT 436-169 *SPEARS* *25/BX* (S05-D18)	436-169	$ 1.03	82	$ 84.46
716	491	CAP 1-1/2IN SLIP SCH40 PVC 25/bx- 447-015 *SPEARS* (S05-D13)	447-015	$ 0.39	62	$ 24.18
717	492	CAP 1-1/2IN THREADED SCH40 PVC 448-015 *SPEARS* 25BX (S05-D14)	448-015	$ 0.62	113	$ 70.06
718	493	COUPLING 1-1/2 IN COMPRESSION S110-15 *SPEARS* *16/BX* (S05-D15)	S110-15	$ 4.96	33	$ 163.68
719	494	COUPLING 1-1/2IN SxS SCH40 PVC 429-015 *SPEARS* 25BX (S05-D16)	429-015	$ 0.35	1659	$ 580.65
720	495	CROSS 1-1/2IN SLIP SCH40 PVC - 420-015 *SPEARS* *25 PER BX* (S05-E18)	420-015	$ 1.81	83	$ 150.23
721	496	ELL 45 DEG 1-1/2IN SxS SCH40 417-015 *SPEARS* *25BX* (S05-E19)	417-015	$ 0.82	2245	$ 1,840.90
722	497	ELL 90 1-1/2IN STREET S x FPT PVC 407-015 SCH40 *SPEARS* *25/BX*(S05-D17)	407-015	$ 0.76	64	$ 48.64
723	498	ADAPTER FEMALE 1/2IN SCH40 PVC - 435-005 50/BX *SPEARS* (S14-D02)	435-005	$ 0.17	6	$ 1.02
724	499	ADAPTER MALE 1/2IN SCH40 PVC - 436-005 *SPEARS* (S14-D03)	436-005	$ 0.14	21	$ 2.94
725	500	COUPLING 1/2IN SxS SCH40 - 429-005 *SPEARS* (S14-D05)	429-005	$ 0.10	16	$ 1.60

ADDENDUM #2 - REVISED BID REPLY SPREADSHEET
E-BID #20120009

	A	B	E	G	H	I
726	501	ELL 45 DEG 1/2IN SxS SCH40 PVC - 417-005 *SPEARS* (S14-D07)	417-005	$ 0.25	6	$ 1.50
727	502	ELL 90 DEG 1/2IN SxFPT SCH40 - 407-005 *SPEARS* (S14-D01)	407-005	$ 0.19	7	$ 1.33
728	503	ELL 90 DEG.1/2IN MPTXS SCH40 - PVC 410-005 *SPEARS* (S14-D04)	410-005	$ 0.33	5	$ 1.65
729	504	ELL 90 DEG 1/2IN SxS SCH40 PVC - 406-005 50/BX *SPEARS* (S14-D10)	406-005	$ 0.15	13	$ 1.95
730	505	ADAPTER FEMALE 3/4IN SCH40 PVC - 435-007 *SPEARS* (S14-D11)	435-007	$ 0.22	71	$ 15.62
731	506	ADAPTER MALE 3/4IN SCH40 PVC - 436-007 *SPEARS* *50 PER BX* (S14-D12)	436-007	$ 0.15	2563	$ 384.45
732	507	CAP 3/4IN SLIP SCH40 PVC - 447-007 50/BX *SPEARS* (S14-D09)	447-007	$ 0.16	289	$ 46.24
733	508	CAP 3/4IN THREADED SCH40 PVC - 448-007 *SPEARS* (S14-D14)	448-007	$ 0.33	7	$ 2.31
734	509	COUPLING 3/4IN COMPRESSION PVC - S110-07 *SPEARS* (S14-D16)	S110-07	$ 2.41	16	$ 38.56
735	510	COUPLING 3/4IN SxS SCH40 429-007 50/BX *SPEARS* (S14-D08)	429-007	$ 0.14	829	$ 116.06
736	511	COUPLING 3/4IN FPTxFPT SCH40 - 430-007 *SPEARS* (S14-D13)	430-007	$ 0.35	8	$ 2.80
737	512	CROSS 3/4IN SLIP SCH40 PVC - 420-007 *SPEARS* (S14-D19)	420-007	$ 0.97	21	$ 20.37
738	513	ELL 45 DEG 3/4IN SxS SCH40 417-007 *SPEARS* *50 PER BX* (S14-D20)	417-007	$ 0.39	837	$ 326.43
739	514	ELL 90 3/4IN FPTxS SCH40 PVC - 407-007 *SPEARS* (S14-D17)	407-007	$ 0.22	139	$ 30.58
740	515	ELL 90 DEG 3/4IN FPTxMPT SCH40 412-007 50/BX *SPEARS* (S14-D18)	412-007	$ 0.55	122	$ 67.10
741	516	ELL 90 3/4IN STR SxMPT SCH40 - 410-007 50/BX *SPEARS* (S14-D24)	410-007	$ 0.39	251	$ 97.89
742	517	ELL 90 3/4IN SxS SCH40 PVC - 406-007 *SPEARS* *50 PER BX* (S14-D25)	406-007	$ 0.17	2898	$ 492.66
743	518	PLUG 3/4IN THRD SCH40 PVC - 450-007 *SPEARS* *PER EA * (S14-D21)	450-007	$ 0.44	3	$ 1.32
744	519	TEE 3/4IN SLIP SCH 40 - 401-007 *SPEARS* (S14-D22)	401-007	$ 0.22	71	$ 15.62
745	520	ADAPTER 3/4x1IN - MPTxS - SCH40 436-102 50/BX *SPEARS* (S14-D29)	436-102	$ 0.39	143	$ 55.77
746	521	ADAPTER FEMALE 1IN SCH40 PVC - 435-010 *SPEARS* (S14-D26)	435-010	$ 0.25	21	$ 5.25
747	522	ADAPTER MALE 1IN SCH40 PVC - 436-010 50/BX *SPEARS* (S14-D27)	436-010	$ 0.27	199	$ 53.73
748	523	ADAPTER FEMALE 3/4x1IN SCH40 435-131 50/BX *SPEARS* (S14-D28)	435-131	$ 0.41	4	$ 1.64
749	524	CAP 1IN SLIP SCH40 PVC - 447-010 *SPEARS* *50 PER BX* (S14-D30)	447-010	$ 0.25	128	$ 32.00
750	525	CAP 1IN THREADED SCH40 PVC 448-010 *SPEARS* (S14-D31)	448-010	$ 0.50	3	$ 1.50
751	526	COUPLING COMP 1IN SCH40 PVC - S110-10 *SPEARS* (S14-D32)	S110-10	$ 3.10	1	$ 3.10
752	527	COUPLING 1IN SxS SCH40 PVC - 429-010 *SPEARS* *50 PER BX* (S14-D33)	429-010	$ 0.24	537	$ 128.88
753	528	REDUCER 2 x 1-1/2IN MPTxFPT SCH40 - 439-251 *SPEARS* (S14-D34)	439-251	$ 1.20	1	$ 1.20
754	529	REDUCER 2x 1-1/2IN SxF SCH40 - PVC (S14-D38)		$ 0.97	7	$ 6.79
755	530	REDUCER 2 x 1-1/2IN SxS SCH40 - 437-251 25/BX *SPEARS* (S14-D36)	437-251	$ 0.68	55	$ 37.40
756	531	REDUCER 2x1IN SxFPT SCH40 PVC (S14-D37)		$ 0.97	13	$ 12.61
757	532	REDUCER 2x1IN MPTxFPT SCH40 PVC - 439-249 *SPEARS* (S14-D40)	439-249	$ 1.20	6	$ 7.20
758	533	REDUCER 2x1IN SxS SCH40 * 437-249* (S14-D35)	437-249	$ 0.68	3	$ 2.04
759	534	REDUCER 2 x 3/4IN SxFPT SCH40 PVC (S14-D39)		$ 0.97	11	$ 10.67
760	535	REDUCER 2x 3/4IN SxS SCH40 PVC 437-248 *SPEARS* (S14-D44)	437-248	$ 0.68	11	$ 7.48
761	536	REDUCER 1-1/2x1-1/4 SxS - 437-212 *SPEARS* *25 PER BX* (S14-D50)	437-212	$ 0.41	729	$ 298.89
762	537	REDUCER 1-1/2 x 1IN MPTxFPT SCH40 - 439-211 *SPEARS* (S14-D47)	439-211	$ 1.12	23	$ 25.76
763	538	REDUCER 1-1/2 x 1IN SxFPT SCH40 - 438-211 25/BX *SPEARS* (S14-D53)	438-211	$ 0.73	32	$ 23.36
764	539	REDUCER 1-1/2 X 1IN SXS SCH40 437-211 25/bx *SPEARS* (S14-D46)	437-211	$ 0.41	25	$ 10.25
765	540	REDUCER 1-1/2 x 3/4IN MPTxFPT SCH40 - PVC 439-210 (S14-D45)	439-210	$ 1.12	3	$ 3.36
766	541	REDUCER 1-1/2 x 3/4IN SxFPT SCH40 - PVC (S14-D51)		$ 0.73	1	$ 0.73
767	542	REDUCER 1-1/2x 3/4IN SxS SCH40-437-210 25/bx (S14-D54)	437-210	$ 0.41	9	$ 3.69
768	543	REDUCER 1 x 3/4IN SxFPT SCH40 - 438-131 (S14-D43)	438-131	$ 0.41	7	$ 2.87
769	544	REDUCER 1x3/4IN SxS SCH40 PVC - 437-131 *SPEARS* *50 PER BX* (S14-D52)	437-131	$ 0.30	268	$ 80.40
770	545	REDUCER 3/4INx1/2IN SxS SCH40 437-101 *SPEARS* *50 PER BX* (S14-D49)	437-101	$ 0.16	31	$ 4.96
771	546	REDUCER 1/2 x 1/4IN SxFPT SCH40 - 438-072 (S14-D41)	438-072	$ 0.33	24	$ 7.92
772	737	VALVE BALL 4 IN SxS SCH40 2622-040 *SPEARS* (S05-A16)	2622-040	$ 117.28	1	$ 117.28
773	1258	CLEANOUT 2 WAY 3" SXSXS SCH40 D448-030 10/BX *LESCO ONLY* (S05-C25)	D448-030	$ 14.06	118	$ 1,659.08
774	1259	CLEANOUT 2 WAY 4" SXSXS SCH40 D448-040 5/BX *LESCO ONLY* (S05-F09)	D448-040	$ 27.64	87	$ 2,404.68
775	1400	WYE 6IN SXS SCH/40 P600-060 *SPEARS* (S06-A23)	P600-060	$ 46.04	1	$ 46.04
776	1401	ADAPTER MALE 8IN SCH/40 - PVC (S06-A17)		$ 38.28	1	$ 38.28
777	1403	WYE 3IN SxS SCH 40 PVC - 475-030 PRESSURE *SPEARS* (S05-B09)	475-030	$ 14.33	1	$ 14.33
778	1404	ELL 90 8IN SXS SCH 40 - PVC 406-080 (S06-A19)	406-080	$ 48.77	1	$ 48.77
779	1405	ADAPTER FEMALE 8IN SCH/40 - PVC (S06-A18)		$ 23.47	1	$ 23.47
780	1614	TEE SANITARY 3IN SxSxS PVC - P400-030 *5 PER BX* (S04-C24)	P400-030	$ 2.50	1	$ 2.50
781	1615	TEE SANITARY 4IN SxSxS PVC - P400-040 *5 PER BX* (S04-C25)	P400-040	$ 11.30	1	$ 11.30
782	1798	COUPLING 8IN PVC FOR SDR35 - GASKET END (S07-A22)	SDR-26	$ 16.22	1	$ 16.22
783	1843	REDUCER 3/4x1/4IN SxFPT SCH40 PVC 438-098 *SPEARS* (S14-D42)	438-098	$ 0.44	5	$ 2.20
784	1938	ADAPTER HOSE 3/4IN SCH40 PVC - 1436-007 GRAY *SPEARS* (S16-E28)	1436-007	$ 0.42	11	$ 4.62
785	1939	ELL 90 3/4IN MxHOSE BARB SCH40 - 1413-007 *SPEARS* (S16-E29)	1413-007	$ 1.84	1	$ 1.84
786	2004	CROSS 2IN SLIP PVC SCH 40 - 420-020 (S05-C14)	420-020	$ 2.67	1	$ 2.67
787	2032	REDUCER 1 1/2 x 1-1/4 SxFPT SCH40 - 438-212 (S14-D48)	438-212	$ 0.73	2	$ 1.46
788	2742	CAP 1/2IN SLIP SCH40 PVC 447-005 (S14-D06)	447-005	$ 0.14	14	$ 1.96
789	3929	TEE 3/4X3/4X1/2IN SXSXF 402-101 (S14-D15)	402-101	$ 0.33	3	$ 0.99
790	3930	TEE 1x1x3/4IN SxSxFPT SCH40 402-131 (S05-E12)	402-131	$ 0.73	18	$ 13.14
791	5268	TEE 3/4IN SxSxFPT SCH40 50/BX *SPEARS* 402-007 (S14-D23)	402-007	$ 0.39	279	$ 108.81
792	5569	ELL 90 4IN BELL X SPIGOT - SDR-35 PVC (S06-A10)	SDR-26	$ 5.16	1	$ 5.16
793	5641	CAP 8IN SLIP PVC SCH 40 (S06-A22)		$ 22.41	1	$ 22.41
794	5695	VALVE 2IN BALL SxS PVC - 2622-020 *SPEARS* (S05-C18)	2622-020	$ 20.85	7	$ 145.95
795	5793	REDUCER 8x4 SCH40 PVC - PART #2908040RS040H	2908040RS040H	$ 31.21	1	$ 31.21
796	5796	ELL 45 DEG. 2-1/2IN SxS SCH40 - 417-025 (S05-C21)	417-025	$ 2.79	1	$ 2.79
797	5797	ELL 90 2-1/2IN SCH40 SxS (S05-C23)		$ 2.78	1	$ 2.78
798	5798	REDUCER 2-1/2 x 2IN SCH40 SxS - 437-292 (S05-C22)	437-292	$ 1.10	13	$ 14.30
799	5799	REDUCER 3 x 2-1/2IN SCH40 SxS - 437-339 (S05-B11)	437-339	$ 1.61	8	$ 12.88

ADDENDUM #2 - REVISED BID REPLY SPREADSHEET
E-BID #20120009

	A	B	E	G	H	I
800	5909	SWEEP 90 DEG 3 IN SxS SCH40 - D300-030 DWV (S05-B16)	D300-030	$ 2.92	26	$ 75.92
801	5910	SWEEP 45 DEG 3IN SxS SCH40 - P321-030 DWV *25 PER BX* (S06-F07)	P321-030	$ 2.48	336	$ 833.28
802	5911	SWEEP 22 1/2 DEG 3IN SxS SCH40 P324-030 DWV *20/BX* (S05-B02)	P324-030	$ 2.67	117	$ 312.39
803	5912	SWEEP 90 DEG 4IN SxS SCH40 10/bx- D300-040 DWV (S05-A02)	D300-040	$ 5.34	14	$ 74.76
804	5913	SWEEP 45 DEG 4IN SxS SCH40 - P321-040 DWV *15 PER BX* (S05-A05)	P321-040	$ 4.25	116	$ 493.00
805	5914	SWEEP 22 1/2 DEG 4IN SxS SCH40 - P324-040 DWV *15/BX* (S05-A06)	P324-040	$ 4.07	69	$ 280.83
806	5924	SADDLE HOT TAP 2-1/2X1-1/2 IN - SPEARS HT2-291 (S08-B17)	HT2-291	$ 49.57	1	$ 49.57
807	6016	ELL 90 DEG 1 1/4 SCH 40 SXS 406-012 25/bx *SPEARS* (S05-E11)	406-012	$ 0.55	116	$ 63.80
808	6024	CLEAN OUT ADAPTER 6" SDR 26 *P1406* (S07-A18)	SDR-26	$ 9.64	7	$ 67.48
809		**13. SUBTOTAL**				**$ 26,955.94**
810		**14. REPAIR CLAMPS & FERNCOS / SMITH-BLAIR, FORD OR APPROVED EQUAL**				
811	656	FERNCO 2 x 2IN PVC TO PVC (S07-A01)		$ 2.33	1	$ 2.33
812	657	FERNCO 3IN PVC TO PVC - 1056-33 (S07-A02)	1056-33	$ 2.94	22	$ 64.68
813	658	FERNCO CLAY TO PVC 4 x 3IN (S07-A03)		$ 4.07	3	$ 12.21
814	659	FERNCO 4IN PVC TO PVC - 1056-44 (S07-A04)	1056-44	$ 3.68	52	$ 191.36
815	660	FERNCO 4IN CLAY TO PVC - 1002-44 (S07-A05)	1002-44	$ 3.68	14	$ 51.52
816	661	FERNCO 4IN CLAY TO CLAY (S07-A06)		$ 3.97	3	$ 11.91
817	662	FERNCO 6IN PVC TO PVC - 1056-66 (S07-A07)	1056-66	$ 7.87	3	$ 23.61
818	663	FERNCO 6IN CLAY TO PVC - 1002-66 (S07-A08)	1002-66	$ 7.87	2	$ 15.74
819	664	FERNCO 6IN CLAY TO CLAY (S07-A09)		$ 7.87	1	$ 7.87
820	665	FERNCO 6 X 8 IN PVC TO PVC (S07-A10)		$ 15.63	1	$ 15.63
821	667	FERNCO 8 x 8IN PVC TO PVC (S07-A12)		$ 12.11	2	$ 24.22
822	668	FERNCO 8IN CLAY TO PVC (S07-A13)		$ 12.11	7	$ 84.77
823	671	FERNCO 10X10IN CLAY TO PVC (S07-A14)		$ 17.06	1	$ 17.06
824	672	DONUT 3IN RUBBER SWC/I X SCH 40 - INDIANA SEAL (S08-A09)		$ 7.63	1	$ 7.63
825	673	DONUT 4IN RUBBER CLAY BELL X - XHC/I C/BELL#432-405 (S08-A08)	432-405	$ 7.63	1	$ 7.63
826	674	DONUT 4IN RUBBER CLAY BELL X - SWC/I DICKEY BELL PVW #404 (S08-A07)	404	$ 7.63	1	$ 7.63
827	675	DONUT 4IN RUBBER CLAY BELL X - SWC/I GRIFFEN C/BELL (S08-A06)		$ 7.63	1	$ 7.63
828	676	DONUT 6IN RUBBER DICKEY - CLAY BELL #608 (S08-A05)	608	$ 12.73	1	$ 12.73
829	677	DONUT 6IN RUBBER GRIFFIN - CLAY BELL #604-609 (S08-A04)	604-609	$ 12.80	1	$ 12.80
830	678	DONUT 6 IN RUBBER 6 X 4 IN - INDIANA SEAL CS604-41 (S08-A03)	CS604-41	$ 11.63	1	$ 11.63
831	679	DONUT 8IN RUBBER INDIANA SEAL - #C5898-85 (S08-A02)	C5898-85	$ 11.63	1	$ 11.63
832	681	CLAMP REPAIR H/C 3/4 X 3 IN SS - 245-00010503-0 (S07-B01)	245-00010503-000	$ 3.82	1	$ 3.82
833	682	CLAMP REPAIR F.CIR 3/4x 3IN SS - #244-00010503-000 12/BX (S07-B02)	244-00010503-000	$ 13.11	384	$ 5,034.24
834	683	CLAMP REPAIR H/C 3/4 X 6 IN SS - 245-00010506-0 (S07-B03)	245-00010506-000	$ 7.11	1	$ 7.11
835	684	CLAMP REPAIR F/C 3/4 X 6 IN SS - 244-00010506-000 (S07-B04)	244-00010506-000	$ 27.71	1	$ 27.71
836	685	CLAMP REPAIR H/C 1 X 3 IN SS - 245-00013203-0 (S07-B05)	245-00013203-000	$ 4.17	1	$ 4.17
837	686	CLAMP REPAIR 1x3IN SS FULL CIRCLE - 244-013203-000 SB (S07-B06)	244-013203-000	$ 15.51	5	$ 77.55
838	687	CLAMP REPAIR F/C 1 X 6 IN SS - 244-00013206-000 (S07-B07)	244-00013206-000	$ 27.92	1	$ 27.92
839	688	CLAMP REPAIR H/C 1-1/2 X 3 IN - 245-00019003-0 (S07-B08)	245-00019003-000	$ 4.60	2	$ 9.20
840	689	CLAMP REPAIR F/C 1-1/2 X 3 IN - 244-00019003-000 *6 PER BX* (S07-B09)	244-00019003-000	$ 14.60	3	$ 43.80
841	690	CLAMP REPAIR H/C 1-1/2 X 6 IN - 245-00019006-0 (S07-B10)	245-00019006-000	$ 8.66	1	$ 8.66
842	691	CLAMP REPAIR F.C. 1-1/2 x 6IN - 244-00019006-000 (S07-B11)	244-00019006-000	$ 28.80	1	$ 28.80
843	692	CLAMP REPAIR F/C 1-1/2X7-1/2IN - 1.88-1.92 (S07-B12)		$ 28.49	1	$ 28.49
844	693	CLAMP REPAIR H/C 2 X 3 IN SS - 245-00023803-0 (S07-B15)	245-00023803-000	$ 5.14	1	$ 5.14
845	694	CLAMP REPAIR 2 x 3IN SS FULLCIRCLE #244-00023803-000 *6 PER BX* (S07-B16)	244-00023803-000	$ 15.90	1	$ 15.90
846	695	CLAMP REPAIR 2 X 6 IN SS - 245-00023806-0 (S07-B17)	245-00023806-000	$ 9.73	1	$ 9.73
847	696	CLAMP REPAIR F/C 2 X 6 IN SS - 244-00023806-000 (S07-B18)	244-00023806-000	$ 29.55	1	$ 29.55
848	697	CLAMP REPAIR 2 X 7-1/2 IN SS - 2.35-2.63 (S07-B19)		$ 28.09	1	$ 28.09
849	698	CLAMP REPAIR 2 X 12 IN SS - 245-00023812-0 (S07-B20)	245-00023812-000	$ 18.51	1	$ 18.51
850	699	CLAMP REPAIR F/C 2 X 12-1/2 IN - 2.35-2.63 (S07-B21)		$ 51.62	1	$ 51.62
851	700	CLAMP REPAIR S/B 3 X 12-1/2 IN - 226-00035012-000 (S07-B23)	226-00035012-000	$ 57.32	1	$ 57.32
852	701	CLAMP REPAIR 3 x 15IN S.S. - 3.46-3.70 FULL CIRCLE (S07-B24)		$ 68.05	1	$ 68.05
853	703	CLAMP REPAIR S/B 4X12-1/2IN SS - 4.74-5.14 (S07-C03)		$ 64.37	1	$ 64.37
854	704	CLAMP REPAIR S/B 4 X 15 IN SS - 4.95-5.35 (S07-C04)		$ 78.41	1	$ 78.41
855	705	CLAMP REPAIR S/B 4x15IN SS - 4.45-4.73 (S07-C05)		$ 74.71	4	$ 298.84
856	706	CLAMP REPAIR S/B 4x15IN SS - O.D.RANGE 4.74-5.14 (S07-C06)		$ 77.65	1	$ 77.65
857	707	CLAMP REPAIR S/B 6 X 7-1/2 IN - 6.56-6.96 (S07-C07)		$ 45.36	1	$ 45.36
858	709	CLAMP REPAIR 6 X 15IN SINGLE BAND - 6.84-7.24 FORD SS (S07-C10)		$ 78.16	4	$ 312.64
859	710	CLAMP REPAIR 6x15IN 7.05-7.45 #226-071015-000 (S07-C11)	226-071015-000	$ 87.28	1	$ 87.28
860	711	SLEEVE 6X6X6 TAPPING (S07-C12)		$ 568.75	1	$ 568.75
861	712	SLEEVE 8X6X8 TAPPING 8.63-9.05 - FORD FAST-905X6 (S07-C13)	905X6	$ 574.88	1	$ 574.88
862	713	CLAMP REPAIR D/B 8 X 10 IN SS - 8.99-9.39 (S07-C14)		$ 73.38	1	$ 73.38
863	714	CLAMP REPAIR S/B 8 X 15 IN SS - 8.54-8.94 (S07-C15)		$ 102.77	1	$ 102.77
864	715	CLAMP REPAIR 8x15IN 8.99-9.39 - #226-090515-000 (S07-C16)	226-090515-000	$ 105.81	1	$ 105.81
865	717	CLAMP REPAIR S/B 8 X 15 IN SS - FORD F1-967X15 (S07-C17)	967X15	$ 86.60	1	$ 86.60
866	718	CLAMP REPAIR S/B SS 10 X 15 9.70-10.10 (S07-D01)		$ 120.64	1	$ 120.64
867	719	CLAMP REPAIR D/B 10 X 15 IN SS - 10.70-11.50 D/B (S07-D02)		$ 169.17	1	$ 169.17
868	720	CLAMP REPAIR S/B 10 X 16 IN SS - 11.04-11.44 S/B (S07-D03)		$ 132.13	1	$ 132.13
869	721	CLAMP REPAIR D/B 10" X 15 " SS - 11.60-12.40 (S07-D04)		$ 190.32	1	$ 190.32
870	722	CLAMP REPAIR S/B 12 X 12-1/2IN - 14.00-14.40 S/B (S07-D05)		$ 127.82	1	$ 127.82
871	723	CLAMP REPAIR D/B 12 X 15 IN SS - 12.70-13.50 D/B (S07-D06)		$ 191.25	1	$ 191.25
872	724	CLAMP REPAIR S/B 12 X 15 13.10-13.50 226-00132015000 (S07-D07)	226-00132015000	$ 152.25	1	$ 152.25

ADDENDUM #2 - REVISED BID REPLY SPREADSHEET
E-BID #20120009

	A	B	E	G	H	I
873	**725**	CLAMP REPAIR D/B 12 X 15 IN SS - 13.65-14.45 D/B (S07-D08)		$ 191.25	1	$ 191.25
874	**726**	CLAMP REPAIR S/B 12 X 15 IN SS - 14.00-14.40 S/B (S07-D09)		$ 159.42	1	$ 159.42
875	**728**	CLAMP REPAIR D/B 16 X 15 IN SS - 17.15-17.90 (S07-D10)		$ 252.33	1	$ 252.33
876	**729**	CLAMP REPAIR D/B 16 X 15 IN SS - 18.46-19.21 (S07-D11)		$ 413.25	1	$ 413.25
877	**730**	CLAMP REPAIR D/B 16 X 20IN SS - 17.15-17.90 (S07-D12)		$ 460.85	1	$ 460.85
878	**731**	CLAMP REPAIR D/B 18 X 15IN SS - 18.46-19.21 (S07-E01)		$ 352.95	1	$ 352.95
879	**732**	CLAMP REPAIR D/B 18 X 15IN SS 19.23-19.98 228-20192315-000 (S07-E03)	228-20192315-000	$ 358.18	1	$ 358.18
880	**733**	CLAMP REPAIR D/B 20 X 30IN SS - 21.52-22.27 (S07-E04)		$ 777.84	1	$ 777.84
881	**789**	COUPLING 4 FLG ADAP.4.74-4.90 - 912-00048004-000 (S08-D07)	912-00048004-000	$ 83.92	1	$ 83.92
882	**799**	COUPLING 10IN QUANTUM - 10.64-11.97 461-10641197 (S08-D16)	461-10641197	$ 170.67	1	$ 170.67
883	**801**	COUPLING 10IN D/I 11.55-12.12 - D/I (S08-E02)		$ 296.39	1	$ 296.39
884	**805**	COUPLING 12IN D/I 13.92-14.26 - D/I (S08-E05)		$ 16.31	1	$ 16.31
885	**838**	CLAMP 4IN BELL JOINT LEAK-4.80 - 274-00000480-000 (S09-E01)	274-00000480-000	$ 80.15	1	$ 80.15
886	**839**	CLAMP 6IN BELL JOINT LEAK-6.90 - 274-00000690-000 (S09-E02)	274-00000690-000	$ 88.27	1	$ 88.27
887	**840**	CLAMP 8IN BELL JOINT LEAK - 9.05-9.30 (S09-E03)		$ 121.96	1	$ 121.96
888	**841**	CLAMP 10IN BELL JOINT LEAK - 11.10-11.40 (S09-E04)		$ 153.24	1	$ 153.24
889	**842**	CLAMP 12IN BELL JOINT LEAK - 13.20-13.50 (S09-E05)		$ 165.75	1	$ 165.75
890	**843**	CLAMP 16IN BELL JOINT LEAK - 17.40-17.80 (S09-E07)		$ 258.82	1	$ 258.82
891	**844**	CLAMP 18IN BELL JOINT LEAK - 19.50-19.92 (S09-E08)		$ 359.66	1	$ 359.66
892	**1461**	COUPLING 8IN MAXI-FIT - 8.59-9.25 (S08-D15)		$ 140.88	1	$ 140.88
893	**3541**	CLAMP REPAIR F/C 1-1/2X 12-1/2 - 1.88-1.92 (S07-B13)		$ 57.59	1	$ 57.59
894	**3542**	CLAMP REPAIR F/C 1-1/2 X 15 IN - 1.88-1.92 n/l/a (S07-B14)		$ 57.59	1	$ 57.59
895	**3543**	CLAMP REPAIR F/C 2 X 15 IN SS - 2.35-2.63 (S07-B22)		$ 59.36	1	$ 59.36
896	**4116**	COUPLING 6IN QUANTUM 6.54-7.65 PART #46106300740 (S08-D10)	46106300740	$ 181.91	4	$ 727.64
897	**5023**	COUPLING 8IN QUANTUM 8.54-9.85 PN #461-08540960-000 (S08-D14)	461-08540960-000	$ 110.93	1	$ 110.93
898	**5045**	COUPLING 4IN QUANTUM 4.46-5.60 PN=461-04290535-000 (S08-D08)	461-04290535-000	$ 75.41	11	$ 829.51
899	**5139**	CLAMP REPAIR S/B 6.56-6.96 226-066307-000 SM/BL (S07-C08)	226-066307-000	$ 45.36	1	$ 45.36
900	**5517**	COUPLING 12IN QUAN 12.75-14.40 - 461-1275144 0000 (S08-E03)	461-1275144 0000	$ 183.46	1	$ 183.46
901	**5606**	CLAMP REPAIR D/B 16 X 15 IN SS - 263-171515-000 (S07-E02)	263-171515-000	$ 385.60	1	$ 385.60
902	**5769**	CLAMP REPAIR 6x15IN SINGLE BAND - 6.56-6.96 226-066315-000 (S07-C09)	226-066315-000	$ 82.23	1	$ 82.23
903	**5833**	COUPLING 16IN REPAIR HYMAX		$ 865.00	1	$ 865.00
904	**5907**	COUPLING 16 IN MAXI-FIT - 74MFC1728 (S09-E09)	74MFC1728	$ 414.17	1	$ 414.17
905	**5940**	CLAMP 20" BELL JOINT LEAK CLAMP SMITH BLAIR # 274-2160-000 (S07-E05)	274-2160-000	$ 417.67	1	$ 417.67
906	**5941**	CLAMP 24" BELL JOINT LEAK CLAMP SMITH BLAIR# 274-2580-000 (S07-E06)	274-2580-000	$ 475.68	1	$ 475.68
907	**5942**	CLAMP 3/4" X 3' FULL CIRCLE 244-008803-000 *16 PER BX* (S07-C01)	244-008803-000	$ 12.99	25	$ 324.75
908	**5943**	CLAMP 3/4"X 6" FULL CIRCLE 244-008806-001 (S07-C02)	244-008806-001	$ 27.63	1	$ 27.63
909	**5962**	GASKET FOR 12" COUPLING #33820 BLUE (S11-C13)		$ 13.76	1	$ 13.76
910	**5976**	COUPLING HYMAX 6IN 6.42-7.68 (S08-D11)		$ 187.83	2	$ 375.66
911	**6094**	COUPLING 4" 4.22-5.60 #242-0550 (S08-D09)	242-0550	$ 193.07	4	$ 772.28
912	**6095**	COUPLING 6" 6.28-7.80 #242-0760 (S08-D12)	242-0760	$ 249.85	2	$ 499.70
913	**6096**	COUPLING 8" 8.40-9.75 #242-0960 (S08-D13)	242-0960	$ 288.46	2	$ 576.92
914	**6097**	COUPLING 10" 10.50-12.12 #242-1200 (S08-D17)	242-1200	$ 371.37	1	$ 371.37
915	**6098**	COUPLING 12" 12.50-14.38 #242-1430 (S08-E04)	242-1430	$ 448.60	1	$ 448.60
916	**6099**	COUPLING 16" 17.32-19.20 #242-1920 (S08-E06)	242-1920	$ 925.58	1	$ 925.58
917		**14. SUBTOTAL**				**$ 23,698.05**
918		**15. SCH 80 PIPE & ALL FITTINGS / SPEARS OR APPROVED EQUAL**				
919	**557**	COUPLING 6" SxS SCH80 PVC - 829-060 *SPEARS* (S17-A03)	829-060	$ 36.17	8	$ 289.36
920	**669**	REDUCER 1 1/4" X 1" SCH80 837-168 *25 BX* (S16-D22)	837-168	$ 2.81	4	$ 11.24
921	**1026**	REDUCER BUSHING 1 X 1/4" MXF SCH80 839-128 25/bx *SPEARS* (S16-E37)	839-128	$ 4.69	1	$ 4.69
922	**1028**	REDUCER BUSHING 1 X 1 1/4" MXF SCH80 839-168 25/bx *SPEARS* (S16-E38)	839-168	$ 3.97	1	$ 3.97
923	**1053**	NIPPLE 1-1/2 x 8IN TBE SCH80 - 886-080 *SPEARS* EA 25/BOX (S16-D01)	886-080	$ 2.17	35	$ 75.95
924	**1059**	NIPPLE 3/4 X CL TBE SCH80 PVC - PART #207-016 (S16-E33)	207-016	$ 0.45	1	$ 0.45
925	**1060**	NIPPLE 3/4 X 2IN TBE SCH80 PVC - PART #207-020 (S16-E34)	207-020	$ 0.45	2	$ 0.90
926	**1061**	NIPPLE 3/4 X 3IN TBE SCH80 PVC - PART #207-030 (S16-E32)	207-030	$ 0.52	1	$ 0.52
927	**1062**	NIPPLE 3/4 X 4IN TBE SCH80 PVC - PART #207-040 (S16-E31)	207-040	$ 0.60	1	$ 0.60
928	**1063**	NIPPLE 3/4 X 6IN TBE SCH80 PVC - PART #207-060 (S16-E30)	207-060	$ 0.89	1	$ 0.89
929	**1064**	NIPPLE 1IN X CL SCH80 PVC 884-005 *SPEARS* (S16-E05)	884-005	$ 0.60	15	$ 9.00
930	**1065**	NIPPLE 1IN X 2IN TBE SCH80 PVC - PART #210-020 (S16-D15)	210-020	$ 0.67	1	$ 0.67
931	**1066**	NIPPLE 1IN X 3IN TBE SCH80 PVC - PART #210-030 (S16-E03)	210-030	$ 0.77	3	$ 2.31
932	**1067**	NIPPLE 1IN X 4IN TBE SCH80 PVC - PART #210-040 (S16-D18)	210-040	$ 0.89	1	$ 0.89
933	**1068**	COUPLING 1IN SCH80 PVC GRAY - HOSE BARBxHOSE BARB (S16-E02)		$ 0.68	1	$ 0.68
934	**1069**	NIPPLE 1-1/4 IN X CL TBE SCH80 - 885-005 *SPEARS* (S16-D09)	885-005	$ 1.26	1	$ 1.26
935	**1070**	NIPPLE 1-1/4 X 2IN TBE SCH80 - PART #212-020 (S16-D10)	212-020	$ 1.26	1	$ 1.26
936	**1071**	NIPPLE 1-1/4 X 3IN TBE SCH80 - 212-030 (S16-D11)	212-030	$ 1.31	2	$ 2.62
937	**1072**	NIPPLE 1-1/2 X 2IN TBE SCH80 - PART #215-020 (S16-C17)	215-020	$ 1.34	1	$ 1.34
938	**1073**	NIPPLE 1-1/2 X 3IN TBE SCH80 - PART #215-030 (S16-D02)	215-030	$ 1.53	3	$ 4.59
939	**1074**	NIPPLE 1-1/2 X 4IN TBE SCH80 886-040 *SPEARS* (S16-C08)	886-040	$ 1.53	1	$ 1.53
940	**1075**	NIPPLE 2IN X CL TBE SCH80 PVC - PART #220-016 (S16-C05)	220-016	$ 1.59	1	$ 1.59
941	**1076**	NIPPLE 2IN X 3IN TBE SCH80 PVC 887-030 (S16-C02)	887-030	$ 1.53	4	$ 6.12
942	**1077**	NIPPLE 2IN X 4IN TBE SCH80 PVC - 887-040 *SPEARS* (S16-C03)	887-040	$ 1.76	1	$ 1.76
943	**1078**	NIPPLE 3IN X CL TBE SCH80 PVC - 889-005 (S16-A08)	889-005	$ 4.66	7	$ 32.62
944	**1079**	NIPPLE 4IN X CL TBE SCH80 PVC - 890-005 (S17-A08)	890-005	$ 8.46	1	$ 8.46
945	**1080**	ELL 90 1-1/2IN SLIP SCH80 PVC - 806-015 10/BX *SPEARS* (S16-C09)	806-015	$ 3.15	36	$ 113.40
946	**1081**	COUPLING 1-1/2IN SxS SCH80 PVC 10/BX 829-015 *SPEARS* (S16-C13)	829-015	$ 4.42	17	$ 75.14

ADDENDUM #2 - REVISED BID REPLY SPREADSHEET
E-BID #20120009

	A	B	E	G	H	I
947	**1082**	COUPLING 1-1/2IN FPTxFPT SCH80 - PVC #830-015 *SPEARS* (S16-C10)	830-015	$ 9.13	1	$ 9.13
948	**1083**	TEE 1-1/2IN SLIP SCH80 PVC - 801-015 *SPEARS* (S16-C15)	801-015	$ 10.87	12	$ 130.44
949	**1084**	UNION 2IN SCH80 PVC FPTxFPT 858-020 5/BX *SPEARS* (S16-B14)	858-020	$ 31.16	2	$ 62.32
950	**1085**	ELL 90 2-1/2IN SxS SCH80 PVC - PART #806-025 *SPEARS* (S16-B07)	806-025	$ 8.93	1	$ 8.93
951	**1086**	FLANGE 1-1/2IN SLIP FF SCH80 - 854-015 4-HOLE *SPEARS* (S16-C12)	854-015	$ 7.33	12	$ 87.96
952	**1087**	FLANGE 2IN SLIP FF SCH80 - 854-020 PVC 4-HOLE 10/BX *SPEARS* (S16-C01)	854-020	$ 9.76	15	$ 146.40
953	**1088**	FLANGE 3 IN SWIVEL SLIP SCH80 - 854-030 4 HOLE GRAY *SPEARS* (S16-A06)	854-030	$ 16.65	1	$ 16.65
954	**1089**	FLANGE 2-1/2IN SLIP FF SCH80 PVC 854-025 *SPEARS* (S16-B05)	854-025	$ 15.07	1	$ 15.07
955	**1091**	FLANGE 4IN SWIVEL SLIP SCH80 - 854-040 8 HOLE GRAY *SPEARS* (S17-A06)	854-040	$ 21.07	31	$ 653.17
956	**1092**	FLANGE 6IN SWIVEL SLIP SCH80 5/bx- 854-060 8-HOLE *SPEARS* (S17-A02)	854-060	$ 33.13	71	$ 2,352.23
957	**1150**	TEE 1" FIPT X FIPT SCH80 805-010 15/bx *SPEARS* (S16-E39)	805-010	$ 8.57	13	$ 111.41
958	**1151**	UNION 1" THREADED FIPT W/VITON SEALS SCH80 8058-010 15/bx *SPEARS* (S16-E40)	8058-010	$ 8.57	3	$ 25.71
959	**1156**	ADAPTER 1" M X HOSE BARB SCH80 1436-010 25/bx *SPEARS* (S16-E41)	1436-010	$ 0.43	27	$ 11.61
960	**1393**	ADAPTER MALE 1-1/4IN SCH80 PVC 10/bx- 836-012 *SPEARS* (S16-D07)	836-012	$ 5.05	434	$ 2,191.70
961	**1394**	ELL 45 DEG. 2-1/2IN SxS SCH80 - PVC 817-025 GRAY *SPEARS* (S16-B06)	817-025	$ 18.91	1	$ 18.91
962	**1395**	PIPE 2IN SCH80 PVC GRAY - 20FT LENGTHS (PR1-C01)		$ 1.81	121	$ 219.01
963	**1396**	PIPE 2-1/2IN SCH80 PVC GRAY - 20FT LENGTHS (PR1-I02)		$ 3.04	1	$ 3.04
964	**1408**	COUPLING 2IN SXS SCH80 PVC - 829-020 20/BX *SPEARS* (S16-B13)	829-020	$ 4.75	57	$ 270.75
965	**1409**	COUPLING 2-1/2IN SXS SCH80 PVC - 829-025 10/bx *SPEARS* (S16-B03)	829-025	$ 11.69	1	$ 11.69
966	**1410**	ELL 90 2IN SCH80 SxS PVC GRAY 25/bx- 806-020 *SPEARS* (S16-B09)	806-020	$ 3.82	64	$ 244.48
967	**1411**	ELL 45 DEG. 2IN SxS SCH80 PVC - 817-020 10/BX *SPEARS* (S16-B11)	817-020	$ 9.01	23	$ 207.23
968	**1412**	ADAPTER MALE 2IN MPTxS SCH80 - 836-020 10/bx *SPEARS* (S16-B16)	836-020	$ 10.49	79	$ 828.71
969	**1413**	ADAPTER MALE 2-1/2IN SCH80 PVC - 836-025 5/BX *SPEARS* (S16-B02)	836-025	$ 11.92	12	$ 143.04
970	**1414**	ADAPTER FEMALE 2IN SCH80 PVC - 835-020 10/bx *SPEARS* (S16-B12)	835-020	$ 13.75	36	$ 495.00
971	**1415**	ADAPTER FEMALE 2-1/2IN SCH80 - 835-025 5/BX *SPEARS* (S16-B01)	835-025	$ 21.71	6	$ 130.26
972	**1416**	WYE 2IN SxS SCH80 PVC - 875-020 *SPEARS* (S16-B08)	875-020	$ 32.76	1	$ 32.76
973	**1558**	ELL 90 6IN SXS SCH80 PVC - 806-060 *SPEARS* (S17-A01)	806-060	$ 43.43	11	$ 477.73
974	**1763**	COUPLING 4IN SxS SCH80 PVC - 829-040 *SPEARS* (S17-A07)	829-040	$ 16.81	6	$ 100.86
975	**1764**	ELL 90 4IN SxS SCH80 PVC - 806-040 *SPEARS* (S17-A05)	806-040	$ 15.26	15	$ 228.90
976	**1827**	COUPLING 2IN FPT X FPT SCH80 PVC 830-020 10/BX *SPEARS* (S16-B18)	830-020	$ 9.58	1	$ 9.58
977	**1970**	PLUG 1IN THRD SCH80 PVC - 850-010 *SPEARS* (S16-D17)	850-010	$ 2.32	1	$ 2.32
978	**2260**	REDUCER 1 X 1/2IN SxS SCH80-837-130 50/bx *SPEARS* (S16-E08)	837-130	$ 1.78	36	$ 64.08
979	**2275**	TEE 1/2IN SLIP SCH80 PVC - 801-005 25/bx *SPEARS* (S16-E25)	801-005	$ 3.02	16	$ 48.32
980	**2276**	TEE 3/4IN SLIP SCH80 PVC - 801-007 *SPEARS* (S16-E06)	801-007	$ 3.16	21	$ 66.36
981	**2277**	TEE 1IN SLIP SCH80 PVC - 801-010 15/bx *SPEARS* (S16-E01)	801-010	$ 3.95	2	$ 7.90
982	**2278**	ELL 90 DEG.1/2IN SxS SCH80 PVC 20/BX 806-005 *SPEARS* (S16-E20)	806-005	$ 1.07	34	$ 36.38
983	**2280**	ELL 90 1IN SxS SCH80 PVC - 806-010 25/BX *SPEARS* (S16-D16)	806-010	$ 2.20	31	$ 68.20
984	**2281**	TEE 1-1/4IN SxS SCH80 PVC - 801-012 10/bx *SPEARS* (S16-D06)	801-012	$ 10.87	44	$ 478.28
985	**2282**	ELL 45 DEG.1/2IN SxS SCH80 PVC - 817-005 *SPEARS* (S16-E27)	817-005	$ 2.01	22	$ 44.22
986	**2283**	ELL 45 DEG.3/4IN SxS SCH80 PVC - 817-007 *SPEARS* (S16-E12)	817-007	$ 3.78	8	$ 30.24
987	**2284**	ELL 45 DEG. 1IN SxS SCH80 PVC - 817-010 *SPEARS* (S16-D20)	817-010	$ 4.61	9	$ 41.49
988	**2285**	COUPLING 1/2IN SxS SCH80 PVC - 829-005 *SPEARS* (S16-E15)	829-005	$ 1.93	19	$ 36.67
989	**2286**	COUPLING 3/4IN SxS SCH80 PVC - 829-007 *SPEARS* (S16-E24)	829-007	$ 2.62	11	$ 28.82
990	**2287**	COUPLING 1IN SxS SCH-80 PVC - 829-010 25/BX *SPEARS* (S16-D21)	829-010	$ 2.69	24	$ 64.56
991	**2288**	ADAPTER FEMALE 1/2IN SCH80 PVC - 835-005 *SPEARS* (S16-E19)	835-005	$ 1.82	15	$ 27.30
992	**2289**	ADAPTER FEMALE 3/4IN SCH80 PVC - 835-007 25/bx *SPEARS* (S16-E11)	835-007	$ 2.69	14	$ 37.66
993	**2290**	ADAPTER FEMALE 1IN SCH80 PVC - 835-010 *SPEARS* (S16-D19)	835-010	$ 3.97	14	$ 55.58
994	**2291**	ADAPTER FEMALE 1-1/2IN SCH80 - 835-015 *SPEARS* (S16-D03)	835-015	$ 7.88	11	$ 86.68
995	**2292**	ADAPTER MALE 1/2IN SCH80 PVC - 836-005 *SPEARS* (S16-E18)	836-005	$ 2.26	36	$ 81.36
996	**2293**	ADAPTER MALE 3/4IN SCH80 PVC - 836-007 *SPEARS* (S16-E10)	836-007	$ 2.50	24	$ 60.00
997	**2294**	ADAPTER MALE 1IN SCH80 PVC - 836-010 20/BX *SPEARS* (S16-E04)	836-010	$ 4.32	86	$ 371.52
998	**2295**	ADAPTER MALE 1-1/2IN SCH80 PVC - 836-015 10/BX *SPEARS* (S16-D04)	836-015	$ 7.26	958	$ 6,955.08
999	**2296**	REDUCER 3/4 x 1/2IN SCH80 PVC- 837-101 50/bx *SPEARS* (S16-E14)	837-101	$ 0.62	15	$ 9.30
1000	**2297**	REDUCER 1x3/4IN SxS SCH80 PVC 50/BX 837-131 *SPEARS* (S16-E09)	837-131	$ 1.78	31	$ 55.18
1001	**2298**	REDUCER 1-1/2x3/4IN SxS SCH80 - 837-210 *SPEARS* (S16-E26)	837-210	$ 3.82	12	$ 45.84
1002	**2299**	REDUCER 2x 3/4IN SxS SCH80 PVC - 837-248 *SPEARS* (S16-C06)	837-248	$ 5.44	2	$ 10.88
1003	**2300**	REDUCER 2 X 1IN SxS SCH80 PVC - 837-249 *SPEARS* (S16-E22)	837-249	$ 5.44	8	$ 43.52
1004	**2301**	REDUCER 2 X 1-1/2IN SxS SCH80 - 837-251 10/BX *SPEARS* (S16-E23)	837-251	$ 5.44	64	$ 348.16
1005	**2340**	TEE 2IN SLIP SCH80 PVC - 801-020 *SPEARS* (S16-B10)	801-020	$ 13.58	13	$ 176.54
1006	**2341**	UNION 1-1/2IN SxS SCH80 PVC - 8057-015 10/BX *SPEARS* (S16-C14)	8057-015	$ 12.95	62	$ 802.90
1007	**2444**	UNION 1IN SxS SCH80 PVC - 8057-010 (S16-D14)	8057-010	$ 5.75	23	$ 132.25
1008	**2463**	UNION 1/2IN SxS SCH 80 8057-005 20/BX (S16-E36)	8057-005	$ 3.97	6	$ 23.82
1009	**2464**	UNION 3/4IN SxS SCH80 PVC - 34P8U 8057-007 (S16-E35)	8057-007	$ 5.04	11	$ 55.44
1010	**2466**	UNION 2IN SxS SCH80 PVC 2P8U 857-020 5/BX *SPEARS* (S16-C04)	857-020	$ 17.55	24	$ 421.20
1011	**2545**	ELL 90 3/4IN SCH80 PVC GRAY-806-007 20/bx *SPEARS* (S16-E07)	806-007	$ 1.38	23	$ 31.28
1012	**2546**	ELL 45 DEG 1-1/2IN SxS SCH80 - 817-015 *SPEARS* (S16-C16)	817-015	$ 6.95	15	$ 104.25
1013	**2588**	COUPLING 1-1/4IN SxS SCH80 PVC - 829-012 10/BX *SPEARS* (S16-D08)	829-012	$ 4.10	111	$ 455.10
1014	**2846**	ADAPTER FEMALE 1-1/4IN SCH80 835-012 10/BX (S16-D12)	835-012	$ 6.43	7	$ 45.01
1015	**3043**	PIPE 3/4IN SCH80 PVC - 20FT LENGTHS GRAY (PR1-E01)		$ 0.58	141	$ 81.78
1016	**3044**	PIPE 1IN SCH80 PVC - GRAY 20FT LENGTHS (PR1-F02)		$ 0.84	91	$ 76.44
1017	**3202**	PIPE 1-1/2IN SCH80 PVC (PR1-G01)		$ 1.29	342	$ 441.18
1018	**3210**	ELL 90 1-1/2IN SxF SCH80 PVC - 807-015 *SPEARS* (S16-C11)	807-015	$ 7.36	2	$ 14.72
1019	**3211**	ELL 90 2IN SxF SCH80 PVC - 807-020 *SPEARS* (S16-B15)	807-020	$ 9.54	1	$ 9.54
1020	**3471**	PIPE 1-1/4IN SCH80 PVC GRAY - 20FT LENGTHS (PR1-F01)		$ 1.17	479	$ 560.43

ADDENDUM #2 - REVISED BID REPLY SPREADSHEET
E-BID #20120009

	A	B	E	G	H	I
1021	3802	CROSS 1-1/2IN SLIP SCH80 PVC PART #820-015 (S16-C07)	820-015	$ 23.70	1	$ 23.70
1022	5018	NIPPLE 2 1/2 X CL TBE SCH80 PVC (S16-B04)		$ 4.33	1	$ 4.33
1023	5155	PIPE 1IN CPVC SCH80 20FT LNG - PART #3670-010 (PR1-H02)		$ 2.20	5	$ 11.00
1024	5156	PIPE 3/4IN CPVC SCH80 20FT LNG - 3670-007 (PR1-H03)		$ 0.83	11	$ 9.13
1025	5176	ELL 90 1-1/4IN SCH80 PVC SxS - #806-012 10/bx *SPEARS* (S16-D05)	806-012	$ 2.95	145	$ 427.75
1026	5177	ELL 45 DEG.1-1/4IN SXS SCH80 - PVC PART #817-012 *SPEARS* (S16-D13)	817-012	$ 5.87	1	$ 5.87
1027	5196	PIPE 4IN SCH80 PVC 20FT LENGTH (PR2-C01)		$ 5.37	121	$ 649.77
1028	5225	ELL 3IN 90 SCH80 SxS PVC - 806-030 *SPEARS* (S16-A02)	806-030	$ 9.44	1	$ 9.44
1029	5226	UNION 3IN SCH80 SxS VITON O-RG - 857-030 *SPEARS* (S16-A07)	857-030	$ 32.67	1	$ 32.67
1030	5228	ELL 45 DEG. 3IN SXS SCH80 PVC - 817-030 *SPEARS* (S16-A03)	817-030	$ 23.02	1	$ 23.02
1031	5247	PIPE 1/2IN CPVC SCH80 20FT LNG - 3670-005 (PR1-H04)		$ 2.20	1	$ 2.20
1032	5250	PIPE 2IN CPVC SCH80 20FT LNG - 3670-020 (PR1-H01)		$ 2.99	21	$ 62.79
1033	5282	PIPE 3IN SCH80 PVC - 0503080 (PR2-C02)		$ 3.75	1	$ 3.75
1034	5283	PIPE 6IN SCH80 PVC - 0506080 (PR2-B01)		$ 10.36	211	$ 2,185.96
1035	5284	PIPE 8IN SCH80 PVC - PART #0508080		$ 15.60	1	$ 15.60
1036	5285	VALVE 1/2IN BALL SCH80 PVC SxS - 2622-005G (S16-E42)	2622-005G	$ 5.05	11	$ 55.55
1037	5287	REDUCER 1/2 X 1/4IN SxF SCH80 - 838-072 *SPEARS* (S16-E16)	838-072	$ 1.71	11	$ 18.81
1038	5288	REDUCER 3/4 X 1/4IN SxF SCH80 - 838-098 *SPEARS* (S16-E17)	838-098	$ 1.14	5	$ 5.70
1039	5289	PIPE 1/2IN SCH80 PVC - 0505080 (PR1-E02)		$ 0.42	111	$ 46.62
1040	5363	TEE 3IN SxSxS SCH 80 801-030 (S16-A01)	801-030	$ 18.47	1	$ 18.47
1041	5365	VALVE 3IN BUTTERFLY FLANGED - SCH80 #251311-030	251311-030	$ 408.93	1	$ 408.93
1042	5366	ELL 3IN 22-1/2 DEG. SCH80		$ 27.14	1	$ 27.14
1043	5367	COUPLING 3IN SxS SCH80 829-030 5/BX *SPEARS* (S16-A05)	829-030	$ 13.42	2	$ 26.84
1044	5369	REDUCER 8IN X 6IN SCH80		$ 70.21	1	$ 70.21
1045	5370	COUPLING 8IN SxS SCH80		$ 49.23	1	$ 49.23
1046	5371	TEE 4IN SxSxS SCH80 801-040	801-040	$ 21.40	1	$ 21.40
1047	5372	REDUCER 4IN X 1IN SxTHRD SCH80 - 4IN SLIPx1IN THRD		$ 22.76	1	$ 22.76
1048	5373	TEE 8IN W/8IN SPIGOT CLEAN OUT - AND PLUG-SCH80		$ 62.49	1	$ 62.49
1049	5385	ADAPTER 4IN FEMALE SCH80 PVC - PART #835-040 *SPEARS*	835-040	$ 42.00	1	$ 42.00
1050	5386	ELL 45 DEG 4IN SCH80 PVC - PART #817-040 *SPEARS*	817-040	$ 41.45	1	$ 41.45
1051	5513	CROSS 3IN SLIP SCH80		$ 49.91	1	$ 49.91
1052	5807	REDUCER 2IN SLIP X 3/4IN FPT - SCH80 PVC		$ 5.56	1	$ 5.56
1053	5819	ADAPTER 4IN MALE SCH80 836-040 *SPEARS* (S17-A09)	836-040	$ 23.55	11	$ 259.05
1054	5824	REDUCER 2 X 1/2IN SCH80 SxF - PVC BUSHING		$ 5.56	1	$ 5.56
1055	6008	REDUCER 1 1/2 X 1 1/4 SCH80 25/BX 837-212 *SPEARS* (S16-E21)	837-212	$ 3.82	174	$ 664.68
1056		**15. SUBTOTAL**				**$ 27,905.61**
1057		**16. STAINLESS STEEL**				
1058	588	INSERT 3/4IN FOR POLY TUBING - 51 SS (S06-D01)	51 SS	$ 1.02	52	$ 53.04
1059	589	INSERT 1IN S.S FOR POLY TUBING - INSERT -52 100/BOX (S06-D03)	52 SS	$ 1.08	1977	$ 2,135.16
1060	590	INSERT 1-1/2IN FOR POLY TUBING - 54 SS (S06-D02)	54 SS	$ 1.49	1	$ 1.49
1061	591	INSERT 2IN SS FOR POLY TUBING - INSERT-55 (S06-D04)	55 SS	$ 1.49	34	$ 50.66
1062	1261	NIPPLE 1 1/4" X CL 316 SS (S10-C17)	316 SS	$ 2.19	11	$ 24.09
1063	1696	PIPE 2IN SCH40 SS 316/316L (PR1-I01)	316 SS	$ 14.65	1	$ 14.65
1064	2009	NIPPLE 2x6 SCHD 40 - 316 S.S. (S15-B28)	316 S.S.	$ 10.78	2	$ 21.56
1065	2753	NIPPLE 2X6IN SCH/40 - 304/SS (S15-B27)	304 S.S.	$ 7.46	1	$ 7.46
1066	5917	NIPPLE 1 1/2 X 3IN S.S. (S15-B29)		$ 4.30	1	$ 4.30
1067		**16. SUBTOTAL**				**$ 2,312.41**
1068		**17. TAP SADDLES, ALL TYPES / SMITH-BLAIR OR APPROVED EQUAL**				
1069	746	SADDLE 2"x1" TAP S/B 2.35-2.56 315-025608-000 (S08-B01)	315-025608-000	$ 19.37	1	$ 19.37
1070	747	SADDLE TAP 3" X 1" S/B 2.97 - 3.54 315-035408-000 (S08-B02)	315-035408-000	$ 20.16	1	$ 20.16
1071	748	SADDLE TAP 3" X 1" D/B 2.97 - 3.54 317-035408-000 (S08-B03)	317-035408-000	$ 34.84	1	$ 34.84
1072	749	SADDLE TAP 3-4" X 2" D/B 3.74-4.13 317-041314-000 (S08-B04)	317-041314-000	$ 39.11	1	$ 39.11
1073	750	SADDLE 4 X 1 TAP S/B 3.74-4.55 315-00045508-000 (S08-B06)	315-00045508-000	$ 24.68	11	$ 271.48
1074	754	SADDLE 4" X 1-1/2" TAP D/B 5.00 - 5.63 317-056312-000 (S08-B08)	317-056312-000	$ 35.99	1	$ 35.99
1075	755	SADDLE 4" X 2" TAP S/B 4.74 - 5.63 315-056314-000 (S08-B09)	315-056314-000	$ 24.41	3	$ 73.23
1076	756	SADDLE TAP 6"x1" S/B 5.94 - 6.90 315-066308-000 *8 PER BX* (S07-D14)	315-066308-000	$ 22.40	171	$ 3,830.40
1077	759	SADDLE 6 X 1-1/2 TAP S/B 6.84-7.60 315-076012-000 (S08-B10)	315-076012-000	$ 26.67	1	$ 26.67
1078	760	SADDLE 6" X 2" TAP D/B 6.84 - 7.60 317-076014-000 (S08-B12)	317-076014-000	$ 45.52	1	$ 45.52
1079	761	SADDLE 6" X 2" TAP S/B 6.84 - 7.60 315-076014-000 (S08-B11)	315-076014-000	$ 26.67	3	$ 80.01
1080	766	SADDLE 8"x2" TAP SB 8.54 - 10.10 315-00101014-000 (S08-B14)	315-00101014-000	$ 32.11	1	$ 32.11
1081	767	SADDLE 8" X 2" TAP D/B 8.54 - 10.10 317-101014-000 (S08-B15)	317-101014-000	$ 52.99	1	$ 52.99
1082	769	SADDLE 10" X 1-1/2" TAP D/B - 10.75-11.10 317-111012 (S08-C01)	317-111012	$ 61.87	1	$ 61.87
1083	770	SADDLE 10" X 2" TAP D/B 10.64-12.12 317-121214-000 (S08-C02)	317-121214-000	$ 61.87	1	$ 61.87
1084	771	SADDLE 10" X 2" TAP S/B 10.64 - 12.12 315-121214-000 (S08-C03)	315-121214-000	$ 36.06	1	$ 36.06
1085	772	SADDLE 12"x 1" TAP 12.62 - 14.32 SB 315-00143208-000 (S08-C04)	315-00143208-000	$ 34.14	15	$ 512.10
1086	773	SADDLE 12" X 1" TAP D/B 12.62 - 14.32 317-143208-000 (S08-C05)	317-143208-000	$ 62.08	1	$ 62.08
1087	774	SADDLE 12" X 1-1/2" TAP D/B 12.62 - 14.32 317-143212-000 (S08-C06)	317-143212-000	$ 66.48	1	$ 66.48
1088	775	SADDLE 12" X 1-1/2" TAP D/B 12.75 - 13.20 317-132012-000 (S08-C07)	317-132012-000	$ 66.53	1	$ 66.53
1089	776	SADDLE 12" X 2" TAP D/B 12.62 - 14.32 317-143214-000 (S08-C08)	317-143214-000	$ 71.13	4	$ 284.52
1090	779	SADDLE 16" X 1" TAP D/B 17.40 - 18.88 317-188808-000 (S08-C11)	317-188808-000	$ 89.32	1	$ 89.32
1091	780	SADDLE 16" X 1-1/2" TAP D/B 15.95 - 17.25 317-172512-000 (S08-C12)	317-172512-000	$ 88.49	1	$ 88.49
1092	781	SADDLE 16-18" X 1-1/2" TAP D/B 17.40-18.88 317-188812-000 (S08-D01)	317-188812-000	$ 95.49	1	$ 95.49
1093	782	SADDLE 16" X 2" TAP D/B 17.40-18.88 317-188814-000 (S08-D02)	317-188814-000	$ 95.49	1	$ 95.49
1094	783	SADDLE 18" X 1" TAP D/B 19.00-20.50 JCM 645320 (S08-D03)	645320	$ 157.52	1	$ 157.52

ADDENDUM #2 - REVISED BID REPLY SPREADSHEET
E-BID #20120009

	A	B	E	G	H	I
1095	785	SADDLE 20" X 1" TAP D/B 21.35 - 22.60 JCM 406-2260X08IP (S08-D04)	406-2260X08IP	$ 162.39	1	$ 162.39
1096	786	SADDLE 20" X 2" TAP D/B 21.35 - 22.60 JCM 406-2260X14IP (S08-D05)	406-2260X14IP	$ 177.20	1	$ 177.20
1097	787	SADDLE 24-26" X 1" TAP D/B 25.50-26.50 JCM 406-2650X08IP (S08-D06)	406-2650X08IP	$ 181.71	1	$ 181.71
1098	1308	SADDLE TAP 3-4" X 2" S/B 3.74 - 4.55 315-00045514-000 (S08-B05)	315-00045514-000	$ 24.68	3	$ 74.04
1099	1757	SADDLE 14" X 2" TAP D/B 14.73 - 15.65 317-156514-000 (S08-C09)	317-156514-000	$ 77.06	1	$ 77.06
1100	2045	SADDLE 8"x1" TAP S/B 8.54 - 10.10 315-101008-000 (S07-D13)	315-101008-000	$ 27.01	36	$ 972.36
1101	2754	SADDLE TAP 4"x1" S/B 4.74 - 5.63 315-056308-000 (S08-B07)	315-056308-000	$ 20.08	8	$ 160.64
1102	3766	SADDLE TAP 16"x1" S/B FORD 17.40-18.40 FC-202-1840-IP4 (S08-C10)	FC-202-1840-IP4	$ 63.62	1	$ 63.62
1103	5293	SADDLE 6"X1" TAP D/B 5.94 - 6.90 317-069008-000	317-069008-000	$ 37.99	1	$ 37.99
1104	5528	SADDLE 10" x 1" TAP S/B 10.64 - 12.12 315-121208-000 (S08-B16)	315-121208-000	$ 29.50	1	$ 29.50
1105	5803	SADDLE 6"x 2" TAP D/B 5.94 - 6.90 317-069014-000	317-069014-000	$ 44.80	1	$ 44.80
1106	5916	SADDLE 2 1/2" X 1 1/2" S/B 2.44 - 2.91 315-029112-000 (S08-B13)	315-029112-000	$ 23.33	1	$ 23.33
1107		**17. SUBTOTAL**				**$ 8,244.34**
1108						
1109		**18. TOOLS, SHOVELS, RAKES / REED, 3M, RAZORBACK OR APPROVED EQUAL**				
1110	170	WRENCH FOR LOCKING LID - VALVE BOX 59WL (B02-21)	59WL	$ 9.09	4	$ 36.36
1111	231	SPRING 32MM FOR JAW WRENCH (B02-78)		$ 2.65	1	$ 2.65
1112	232	JAW 1-1/4IN FOR JAW WRENCH - ONE HANDED 32MM (B02-77)		$ 24.79	1	$ 24.79
1113	275	BLADE 1-1/2IN SCISSOR SHEAR - REED #SC1/PIPE CUTTER (B04-24)	REED #SC1	$ 4.84	1	$ 4.84
1114	335	BLADE FOR 18IN PVC SAW - PPS18B REED *PER EA.* (B13-C01)	PPS18B	$ 9.51	7	$ 66.57
1115	336	SAW HAND 18IN FOR PVC - PPS18 REED *PER EA.* (B13-D01)	PPS18	$ 15.48	7	$ 108.36
1116	809	CURB BX BSE/ARCH PAT 1 1/4X5FT - W/27/32IN BRASS PLUG (S09-A05)		$ 26.98	1	$ 26.98
1117	810	STATIONARY ROD FOR CURB VALVE - 5FT 59ROD60 FORD (S09-A06)	59ROD60	$ 14.48	1	$ 14.48
1118	811	HANDLE T-SHUT OFF ROD 5FT - FORD 59SROD5	59SROD5	$ 41.85	1	$ 41.85
1119	820	HOOK MANHOLE COVER - P553 (S09-B13)	P553	$ 19.53	3	$ 58.59
1120	822	PROBE FIBERGLASS W/TEE HANDLE - 4FT (S09-B15)		$ 15.85	31	$ 491.35
1121	823	WRENCH ADJUSTABLE HYDRANT - AHW (S09-B16)		$ 15.67	8	$ 125.36
1122	1108	SHOVEL ROUND-POINT RAZORBACK - 65UF45520 (SW-04)	65UF45520	$ 19.99	68	$ 1,359.32
1123	1110	SHOVEL SQUARE-POINT RAZORBACK - 65UF44124 (SW-10)	65UF44124	$ 20.33	23	$ 467.59
1124	2018	PIN ASSEMBLY FOR JAW WRENCH - 92727 MW-PS (B02-75)		$ 1.71	1	$ 1.71
1125	2019	PIN 3/16IN SPRIAL F/JAW WRENCH - 30008 (B02-76)		$ 1.71	1	$ 1.71
1126	2092	CUTTER PVC PIPE 1-1/2IN - REED RS1 (B12-C01)	RS1	$ 55.69	19	$ 1,058.11
1127	2750	WRENCH VALVE KEY TELESCOPIC - 2x4-8FT STEEL (S09-A07)		$ 80.41	1	$ 80.41
1128	2785	CRIMPING TOOL 3/4-1 IN STEEL - PES1CTS FOR POLY (B01-H10)		$ 180.12	1	$ 180.12
1129	2830	BLADE 1-1/2IN RATCHET SHEARS - RS-1B REED (B12-C02)	RS-1B	$ 20.89	21	$ 438.69
1130	3168	HANDLE POST HOLE DIGGER - 72/IN WOOD (SW-14)		$ 40.54	1	$ 40.54
1131	3259	BLADE 2IN RATCHET SHEARS REED - RS2 REED (B04-23)	RS2	$ 28.27	4	$ 113.08
1132	5015	WRENCH VALVE OPERATING 2IN SQ. X 6FT LONG (S09-C11)		$ 51.84	2	$ 103.68
1133	5767	HOOK MANHOLE 36IN (S09-B14)		$ 25.44	6	$ 152.64
1134		**18. SUBTOTAL**				**$ 4,999.78**
1135		**19. VALVES/GATE, STEEL/CLOW,DEZURIK, KENNEDY OR APPROVED EQUAL**				
1136	988	VALVE 2IN GATE KENNEDY FG#4597 - 200W / IRON (S11-C19)	4597 - 200W	$ 216.06	1	$ 216.06
1137	989	VALVE 4IN PLUG DEZURIK - FIG118.F.6.RS26.ANG (S12-E06)	FIG118.F.6.RS26.ANG	$ 291.87	1	$ 291.87
1138	990	VALVE 4IN CHECK FLANGED (S12-E07)		$ 1,045.45	1	$ 1,045.45
1139	991	VALVE 4IN GATE F6100 MJ - R/S (S12-E08)	F6100 MJ - R/S	$ 332.19	7	$ 2,325.33
1140	992	VALVE 6IN GATE F6100 MJ - R/S L/ACC (S12-E09)	F6100 MJ - R/S	$ 423.89	3	$ 1,271.67
1141	994	VALVE 6" GATE F6106 MJ / FLANGE (S12-E10)	F6106 MJ / FLANGE	$ 443.77	1	$ 443.77
1142	995	VALVE 8IN GATE F6100 MJ - R/S (S12-E11)	F6100 MJ - R/S	$ 675.17	3	$ 2,025.51
1143	1789	VALVE 2IN GATE/RW F-THD. IRON - F6103 CLOW (S11-C20)	F6103	$ 172.68	8	$ 1,381.44
1144	2093	VALVE 10IN GATE F6100 MJ R/S (S12-E13)	F6100 MJ R/S	$ 1,052.78	1	$ 1,052.78
1145	2214	VALVE 12IN GATE F6100 MJ - R/S (S12-E12)	F6100 MJ - R/S	$ 1,332.16	3	$ 3,996.48
1146	2722	VALVE 12IN PLUG W/GEAR & 2NUT - 10785901052255 (S10-E09)	10785901052255	$ 2,051.05	1	$ 2,051.05
1147	4207	VALVE 3IN FLGED PLUG DEZURIK W BURIED SERV ADAPTER (S12-E04)		$ 227.14	1	$ 227.14
1148	4208	VALVE 2IN FLANGED PLUG DEZURIK W/BURIED SERV. ADAPT (S12-E02)		$ 152.18	1	$ 152.18
1149	4209	VALVE 3IN FLANGED KENNEDY SPRING & LEVER (S12-E03)		$ 753.30	1	$ 753.30
1150	4210	VALVE 2IN CHECK FLANGED KENNEDY SPRING & LEVER (S12-E01)		$ 859.51	1	$ 859.51
1151	5374	VALVE 3IN GATE F6100 MJ RW L/ACC - R/S (S12-E05)	F6100 MJ RW L/ACC - R/S	$ 297.27	1	$ 297.27
1152	5766	VALVE 16IN MJ GATE - F6100 W/SQ OPERATING NUT	F6100	$ 3,608.18	1	$ 3,608.18
1153	5773	VALVE 6IN TAPPING F6114 MJ RW	F6114 MJ RW	$ 340.74	1	$ 340.74
1154	5785	VALVE 3IN GATE F6102 R/S - FLANGED W/HAND WHEEL	F6102 R/S	$ 294.71	1	$ 294.71
1155	5789	VALVE 6IN CHECK SPR & LVR - KENNEDY #106LS	106LS	$ 1,351.47	1	$ 1,351.47
1156	5790	VALVE 6IN PLUG DEZURIK #F118N - FLANGED W/2IN OP NUT	F118N	$ 481.53	1	$ 481.53
1157	5821	VALVE 8IN DEZURIK PLUG FLANGED - 2IN OP NUT/#F118N	F118N	$ 632.58	1	$ 632.58
1158	5841	VALVE 4IN KENNEDY SPRING/LEVER - FLANGED STYLE 106SL	106SL	$ 1,044.83	1	$ 1,044.83
1159	6092	VALVE 2 1/2" GATE/RW THRD F6103 CLOW (S11-C21)	F6103	$ 249.85	1	$ 249.85
1160		**19. SUBTOTAL**				**$ 26,394.70**
1161						
1162		**20. NO-LEAD BRASS ITEMS / FORD, MUELLER OR APPROVED EQUAL**				
1163	10	ADAPTER HYD 2 1/2" x 2" FXM SWIVEL (S06-B33)		$ 83.89	5	$ 419.45

ADDENDUM #2 - REVISED BID REPLY SPREADSHEET
E-BID #20120009

	A	B	E	G	H	I
1164	**283**	VALVE SWING CHECK 1 1/2" BRASS M31 5 PER BX (S06-F08)	M31	$ 24.05	553	$ 13,299.65
1165	**566**	VALVE 1-1/2IN BALL MxFL - BF83-666W BRASS (S06-E39)	BF83-666W	$ 135.91	1	$ 135.91
1166	**567**	VALVE 2IN BALL MIPxMF LW BRASS - BF83-77W FORD (S06-E41)	BF83-77W	$ 219.90	2	$ 439.80
1167	**568**	CORP 1-1/2IN STOP MPTxCTS/PJ - BF1100-6 (S06-E40)	BF1100-6	$ 106.32	0	$ -
1168	**569**	BALL CORP 1-1/2IN MxF - FB1700-6 (S06-D05)	FB1700-6	$ 102.86	1	$ 102.86
1169	**570**	BALL CORP 2IN MxF BRASS - FB1700-7 *2 PER BX* (S06-E38)	FB1700-7	$ 166.40	8	$ 1,331.20
1170	**578**	BACKFLOW 3/4IN VAC BRKR 8B07 - WATTS EDP# 0061992 (S06-E45)	8B07 / 61992	$ 24.55	7	$ 171.85
1171	**592**	NIPPLE 3/4xCL TBE BRASS - 2012-001 (S06-E26)	2012-001	$ 1.78	112	$ 199.36
1172	**593**	NIPPLE 1IN X CL BRASS - 2016-001 (S06-E23)	2016-001	$ 2.63	40	$ 105.20
1173	**594**	NIPPLE 1IN x 3IN BRASS TBE - 2016-300 (S06-E22)	2016-300	$ 4.37	32	$ 139.84
1174	**595**	NIPPLE 1-1/2IN x CL BRASS - 2024-001 (S06-E17)	2024-001	$ 5.16	10	$ 51.60
1175	**596**	NIPPLE 1-1/2 x 3IN BRASS - 2024-300 (S06-E18)	2024-300	$ 7.65	8	$ 61.20
1176	**597**	NIPPLE 2IN X CL BRASS TBE - 2032-001 (S06-E21)	2032-001	$ 7.87	26	$ 204.62
1177	**598**	NIPPLE 2INx4IN TBE BRASS - 2032-400 (S06-E14)	2032-400	$ 12.82	9	$ 115.38
1178	**599**	VALVE 3/4IN GATE FPT BRASS - 3407GM300 (S06-F02)	3407GM300	$ 5.30	300	$ 1,590.00
1179	**600**	VALVE 1IN GATE FPT BRASS - 200 WOG *5 PER BX* (S06-C01)	200 WOG	$ 7.26	0	$ -
1180	**601**	VALVE 1-1/2IN GATE FPT BRASS - #200 WOG FPT *4 PER BX* (S06-C02)	200 WOG	$ 25.36	5	$ 126.80
1181	**602**	VALVE 2IN GATE FPT BRASS - #200 WOG FPT *2 PER BX* (S06-C03)	200 WOG	$ 38.70	1	$ 38.70
1182	**603**	VALVE 3/4IN HOSE BIBB BRASS - 3407HBM (S06-C11)	3407HBM	$ 8.34	430	$ 3,586.20
1183	**604**	VALVE 1IN HOSE BIBB BRASS - #107-265/T-531 MALE (S06-C12)	107-265/T-531	$ 20.83	0	$ -
1184	**605**	VALVE 3/4IN STR DUAL CK BRASS - HHS31-323 FORD *8 PER BX* (S06-D22)	HHS31-323	$ 47.02	2055	$ 96,626.10
1185	**606**	VALVE 1IN STRAIGHT DUAL CHECK - BRASS FORD#HHS31-344 (S06-D23)	HHS31-344	$ 51.10	20	$ 1,022.00
1186	**607**	CORP 1IN STOP BRASS - CTS/PJ X TAPER MPT		$ 37.10	0	$ -
1187	**610**	VALVE 3/4X5/8IN ANGLE KEY - KV13-332W BRASS *12 PER BX* (S06-D28)	KV13-332W	$ 23.20	45	$ 1,044.00
1188	**611**	VALVE 3/4X3/4IN ANGLE KEY - KV43-332WG BRASS *8 PER BX* (S06-D32)	KV43-332WG	$ 29.67	3	$ 89.01
1189	**613**	VALVE 1IN ANGLE KEY BRASS - KV13-444W *5 PER BX* (S06-D26)	KV13-444W	$ 35.58	32	$ 1,138.56
1190	**614**	VALVE 1X1IN ANGLE KEY - BRASS P/N-KV43-444WG *5 PER BX* (S06-D27)	KV43-444WG	$ 40.86	2	$ 81.72
1191	**615**	COUPLING 3/4IN COMP/SINGLE - C84-33G MPJxCTS/PJ BR 24 bx (S06-D15)	C84-33G	$ 11.18	7	$ 78.26
1192	**616**	COUPLING 1IN COMP/SINGLE BRASS C84-44G MPTxCTS/PJ 14 PER BX (S06-D17)	C84-44G	$ 13.24	44	$ 582.56
1193	**618**	COUPLING 3/4IN DOUBLE COMP - CTS/PJ #C44-33 BRASS	C44-33G	$ 13.61	0	$ -
1194	**620**	COUPLING 2IN COMP DBL GRIP/JNT - BRASS #C44-77G FORD (S06-D09)	C44-77G	$ 70.34	2	$ 140.68
1195	**626**	METER COUPLING 3/4IN BRASS - PLUMBERS PIECES (S06-C17)		$ 7.44	75	$ 558.00
1196	**627**	METER COUPLING 1 IN BRASS - PLUMBERS PIECE (S06-C18)		$ 11.31	35	$ 395.85
1197	**629**	TEE 1IN BRASS FPT (S06-C19)		$ 16.89	13	$ 219.57
1198	**630**	ELL 90 2IN ST FxMPT BRASS - 30209E (S06-C23)	30209E	$ 57.22	3	$ 171.66
1199	**631**	REDUCER 1X3/4IN BRASS FXM/THD - MUELLER/METER (S06-E31)		$ 14.09	36	$ 507.24
1200	**633**	REDUCER 1-1/2 X 1IN MPTxFPT - BRASS (S06-E30)		$ 16.65	118	$ 1,964.70
1201	**634**	REDUCER 2-1/2IN x 2IN MxF - BRASS BUSHING (S06-E33)		$ 16.05	5	$ 80.25
1202	**635**	ADAPTER HYD 2 1/2" X 2" BRASS - MNST (S06-B38)		$ 38.49	25	$ 962.25
1203	**636**	ADAPTER HYD 2 1/2" x 3/4" BRASS - FNST X MIPT (S06-B34)		$ 30.75	3	$ 92.25
1204	**637**	ADAPTER HYD 2 1/2" X 1" BRASS (S06-B35)		$ 31.13	3	$ 93.39
1205	**638**	ADAPTER HYD 2 1/2" x 1 1/2" - BRASS (S06-B36)		$ 81.42	0	$ -
1206	**639**	ADAPTER HYD 2 1/2" X 2" BRASS FXM (S06-B37)		$ 23.51	3	$ 70.53
1207	**644**	HOSE NOZZLE 2 1/2" BRASS AMLOK 84-20-3 (S06-B31)	84-20-3	$ 124.11	1	$ 124.11
1208	**651**	RESETTER COPPER 5/8 x 3/4 x 7 - V42-7W (S06-F03)	V42-7W	$ 68.24	114	$ 7,779.36
1209	**652**	RESETTER COPPER 5/8 x 3/4 x 9 - V42-9W FORD (S06-F04)	V42-9W	$ 69.09	23	$ 1,589.07
1210	**653**	RESETTER COPPER 5/8 X 3/4 X 12 V42-12W (S06-F06)	V42-12W	$ 71.52	18	$ 1,287.36
1211	**654**	RESETTER COPPER 1 X 10IN - FORD V44-10W (S07-E13)	V44-10W	$ 130.31	0	$ -
1212	**655**	RESETTER COPPER 1 X 12IN - FORD V44-12W (S07-E14)	V44-12W	$ 133.41	0	$ -
1213	**1198**	NIPPLE 1/4" X 2" BRASS 2271-419 (S06-C38)	2271-419	$ 1.23	3	$ 3.69
1214	**1307**	BALL 2IN CURB STOP FXF BRASS - B11-77W FORD *2 PER BX* (S06-E43)	B11-77W	$ 180.17	4	$ 720.68
1215	**1377**	NIPPLE 1 X 36IN BRASS TBE (S06-E03)		$ 48.33	4	$ 193.32
1216	**1378**	NIPPLE 1 1/2 X 36IN BRASS TBE (S06-E04)		$ 91.00	1	$ 91.00
1217	**1379**	NIPPLE 2IN X 3IN BRASS TBE - 2032-300 (S06-E15)	2032-300	$ 9.80	27	$ 264.60
1218	**1380**	ELL 90 DEG.3/4IN FPTxFPT BRASS - 4501-150 (S06-C27)	4501-150	$ 4.90	0	$ -
1219	**1381**	ELL 90 1IN FPT X FPT - BRASS (S06-C28)		$ 7.56	11	$ 83.16
1220	**1382**	ELL 1-1/2IN 90 FXF - BRASS (S06-C21)		$ 15.00	0	$ -
1221	**1383**	ELL 90 2IN FXF BRASS - 4501-400 (S06-C24)	4501-400	$ 24.43	5	$ 122.15
1222	**1572**	ADAPTER METER 1 X 3/4 IN MXF - BRASS #3907A24 PER PR. (S06-E37)	3907A24	$ 18.55	0	$ -
1223	**1573**	REDUCER 2 X 1-1/2IN MxF BRASS - HEX BUSHING (S06-E32)		$ 11.27	8	$ 90.16
1224	**1606**	REDUCER 1 X 3/4IN MPTxFPT - BRASS BUSHING (S06-E28)		$ 3.50	69	$ 241.50

ADDENDUM #2 - REVISED BID REPLY SPREADSHEET
E-BID #20120009

	A	B	E	G	H	I
1225	**1640**	COUPLING 5/8 X 3/4IN METER - C31-23 Ford BRASS (S06-E36)	C31-23	$ 10.63	2	$ 21.26
1226	**1655**	REDUCER 1 1/4X1IN MXF/THD - BRASS (S06-E29)		$ 5.56	7	$ 38.92
1227	**1656**	NIPPLE 3/4 X 36IN BRASS TBE - 2012-3600 (S06-E02)	2012-3600	$ 32.24	1	$ 32.24
1228	**1657**	NIPPLE 2 X 36IN BRASS TBE - 2032-3600 (S06-E01)	2032-3600	$ 109.47	3	$ 328.41
1229	**1775**	VALVE 1/2IN BALL FPT BRASS (S06-C04)		$ 4.93	5	$ 24.65
1230	**1776**	VALVE 1IN BALL FPT BRASS - 68-100 (S06-C06)		$ 10.24	34	$ 348.16
1231	**1809**	REDUCER 2 x 3/4IN MxF BRASS - 3020B07020B07 (S06-E34)	3020B07020B07	$ 13.59	8	$ 108.72
1232	**1810**	REDUCER 2x1IN MPTxFPT BRASS - 3020B10 (S06-E35)	3020B10	$ 21.51	15	$ 322.65
1233	**1811**	ELL 90 2IN CTS/PJ X CTS/PJ - L44-77 BRASS (S06-D06)	L44-77	$ 146.82	4	$ 587.28
1234	**1812**	VALVE 2IN ANGLE MTR STOP FxFLG - FORD #BFA13-777W *2 PER BX* (S06-E42)	BFA13-777W	$ 198.65	4	$ 794.60
1235	**1830**	TEE 2IN FPT BRASS (S06-C20)		$ 33.82	7	$ 236.74
1236	**2055**	VALVE 3/4X1IN ANGLE BRASS - KV13-342W *10 PER BX* (S06-D30)	KV13-342W	$ 24.77	36	$ 891.72
1237	**2056**	ADAPTER HYD 2 1/2" X 2" BRASS (S06-B32)		$ 89.43	0	$ -
1238	**2091**	COUPLING 2IN FPT x FPT BRASS - 4540-400 flagg (S06-C16)	4540-400	$ 18.56	13	$ 241.28
1239	**2459**	CROSS 2IN FPT BRASS (S06-C22)		$ 51.27	0	$ -
1240	**2667**	CAP 1-1/4IN THREADED BRASS (S06-C29)		$ 6.65	1	$ 6.65
1241	**2668**	ELL 90 3/4IN STREET FxM BRASS - X103-12 (S06-C25)	X103-12	$ 5.07	2	$ 10.14
1242	**2669**	ELL 90 1IN STREET FPTxMPT BRAS - X103-16 (S06-C26)	X103-16	$ 8.39	9	$ 75.51
1243	**2755**	NUT & 1IN GASKET ASSEMBLY GRIP NUT - BRASS (S06-C34)		$ 3.75	0	$ -
1244	**2756**	NUT & 1IN GASKET ASSEMBLY GRIP NUT GJCN4-4 - BRASS (S06-C35)	GJCN4-4	$ 17.30	50	$ 865.00
1245	**2762**	VALVE 2IN BALL FPT BRASS - 3420BM200 *2 PER BX* (S06-C08)	3420BM200	$ 34.65	15	$ 519.75
1246	**2907**	VALVE 3/4IN BALL FPT BRASS - 3407BM200 (S06-C05)	3407BM200	$ 6.94	131	$ 909.14
1247	**3022**	NIPPLE 3/4 X 3IN BRASS (S06-E27)		$ 3.01	25	$ 75.25
1248	**3112**	UNION 3/4IN FPT BRASS (S06-C30)		$ 10.17	0	$ -
1249	**3113**	UNION 1IN FPT BRASS (S06-C31)		$ 13.46	0	$ -
1250	**3126**	UNION 1 1/2IN FPT - BRASS (S06-C32)		$ 23.27	0	$ -
1251	**3127**	UNION 2IN 3/PC FPT BRASS - 3020U (S06-C33)	3020U	$ 39.74	1	$ 39.74
1252	**3481**	VALVE 1 X 3/4IN STRAIGHT BALL 5/BX- B43-342WG (S06-D29)	B43-342WG	$ 64.24	2	$ 128.48
1253	**3484**	VALVE 1X1IN STRAIGHT BALL - BRASS (S06-D31)		$ 61.58	1	$ 61.58
1254	**3978**	VALVE 1-1/2IN BALL FPT BRASS 3415BM200 (S06-C07)	3415BM200	$ 13.69	47	$ 643.43
1255	**4039**	VALVE 4IN GATE BRASS FPT #300 PART #3440GM300 (S06-C10)	3440GM300	$ 120.05	0	$ -
1256	**5325**	COUPLING 1IN DOUBLE COMP BRASS - C44-44G CTS GRIP *12 PER BX* (S06-D20)	C44-44G	$ 15.57	152	$ 2,366.64
1257	**5380**	COUPLING 2IN GRIP/JOINT BRASS - C84-77G MPTxCTS/GJ (S06-D18)	C84-77G	$ 52.84	16	$ 845.44
1258	**5381**	ELL 90 1IN COMP.GRIP BRASS - L44-44G FORD *8 PER BX* (S06-D21)	L44-44G	$ 22.60	129	$ 2,915.40
1259	**5383**	VALVE 3/4x1IN ANGLE U-BRANCH - UV-43-42-WG FORD *8 PER BX* (S06-F01)	UV-43-42-WG	$ 84.13	464	$ 39,036.32
1260	**5384**	CORP STOP 1IN BRASS MPTxCTS/G - F1100-4G FORD *6 PER BX* (S06-D24)	F1100-4G	$ 36.89	386	$ 14,239.54
1261	**5389**	COUPLING 1-1/2IN FPTxFPT BRASS - 30155 (S06-C15)	30155	$ 26.18	3	$ 78.54
1262	**5390**	VALVE ANGLE 3/4 x 1IN BRASS - KV43-342WG GRIP JNT (S06-D25)	KV43-342WG	$ 32.83	315	$ 10,341.45
1263	**5403**	VALVE 3IN GATE BRASS FPT - FIG. M300 (S06-C09)	M300	$ -	1	$ -
1264	**5406**	BALL 1-1/2IN CURB STOP FPTxFPT - BRASS FORD B11-666W *2 PER BX* (S06-D10)	B11-666W	$ 123.94	0	$ -
1265	**5429**	NUT ASSEM 1IN/FORD GRIP JOINTS - GJN4-4 (S06-B26)	GJN4-4	$ 5.85	0	$ -
1266	**5430**	NUT ASSEM 2IN/FORD GRIP JOINTS - GJN4-7 (S06-B25)	GJN4-7	$ 17.30	0	$ -
1267	**5471**	COUPLING 3/4IN DBL COMP BRASS GRIP/JOINT C44-33G 14/BX (S06-D19)	C44-33G	$ 13.61	3	$ 40.83
1268	**5476**	COUPLING 3/4IN FPT x FPT - BRASS (S06-C13)		$ 3.50	14	$ 49.00
1269	**5477**	COUPLING 1IN FPT x FPT BRASS (S06-C14)		$ 6.01	9	$ 54.09
1270	**5479**	NIPPLE 1IN X 6IN TBE BRASS (S06-E19)		$ 8.37	14	$ 117.18
1271	**5588**	NIPPLE 3/4 IN X 6 IN BRASS TBE (S06-E24)		$ 5.73	4	$ 22.92
1272	**5589**	NIPPLE 1 IN X 4 IN BRASS TBE (S06-E20)		$ 5.68	12	$ 68.16
1273	**5590**	NIPPLE 3/4 IN X 4 IN BRASS TBE (S06-E25)		$ 3.93	4	$ 15.72
1274	**5677**	NIPPLE 2IN X 6IN BRASS TBE (S06-E16)		$ 18.93	14	$ 265.02
1275	**5748**	VALVE SWING CHECK 2" BRASS M31 2 PER BX (S06-C36)	M31	$ 36.90	11	$ 405.90
1276	**5771**	ELL 90 3/4IN COMP GRIP BRASS L44-33G (S06-D16)	L44-33G	$ 17.59	0	$ -
1277	**5802**	VALVE 3/4IN X 3/4IN BALL CURB - FORD #B43-332W-G *5 PER BX* (S06-D11)	B43-332W-G	$ 51.42	21	$ 1,079.82
1278	**5898**	NIPPLE 3/4 x 12IN BRASS (S06-E05)		$ 10.98	1	$ 10.98
1279	**5899**	NIPPLE 3/4 x 18IN BRASS (S06-E07)		$ 17.29	0	$ -
1280	**5900**	NIPPLE 3/4 x 24IN BRASS (S06-E09)		$ 23.06	2	$ 46.12
1281	**5901**	NIPPLE 1 x 12IN BRASS (S06-E06)		$ 16.46	4	$ 65.84
1282	**5902**	NIPPLE 1 x 18IN BRASS (S06-E08)		$ 25.93	1	$ 25.93
1283	**5903**	NIPPLE 1 x 24IN BRASS (S06-E11)		$ 34.57	2	$ 69.14
1284	**5904**	NIPPLE 2 x 12IN BRASS (S06-E10)		$ 37.29	2	$ 74.58

ADDENDUM #2 - REVISED BID REPLY SPREADSHEET
E-BID #20120009

	A	B	E	G	H	I
1285	**5905**	NIPPLE 2 x18IN BRASS (S06-E13)		$ 58.73	2	$ 117.46
1286	**5906**	NIPPLE 2 x 24IN BRASS (S06-E12)		$ 78.32	0	$ -
1287	**5918**	VALVE 1 1/2 IN FPT x FPT - 2621-015 (S05-D03)	2621-015	$ 16.65	2	$ 33.30
1288	**5927**	COPR STOP 3/4 IN BRASS - 3/4 IN F1100-3-G *10 PER BX* (S06-D14)	F1100-3-G	$ 24.53	0	$ -
1289	**5983**	COUPLING COMP. 1 1/2" BRASS C44-66G (S06-D08)	C44-66G	$ 52.42	0	$ -
1290	**5984**	MALE ADPT. COMP. 1 1/2" BRASS C84-66G (S06-D07)	C84-66G	$ 36.48	0	$ -
1291	**6015**	VALVE 1 1/2 CHECK SINGLE HS11-666 *4 PER BX* (S06-E44)	HS11-666	$ 112.13	1	$ 112.13
1292	**6070**	VALVE BALL METER B13-332W 3/4x1 *6 PER BX* (S06-D13)	B13-332W	$ 46.02	10	$ 460.20
1293	**6071**	VALVE BALL METER B13-344W 3/4x1 *5 PER BX* (S06-D12)	B13-344W	$ 50.20	0	$ -
1294		**20. SUBTOTAL**				**$ 220,897.31**
1295		**21. METERS, WATER & ALL PARTS**				
1296	**3**	BACKFLOW 3/4" PREVENTER RPZ WILKINS XL (S10-B01)	975XL	$ 288.38	32	$ 9,228.16
1297	**646**	BACKFLOW 1" PREVENTER RPZ WILKINS 975XL (S10-B02)	975XL	$ 310.78	19	$ 5,904.82
1298	**650**	BACKFLOW 2" PREVENTER RPZ WILKINS 975XL	975XL	$ 702.55	13	$ 9,133.15
1299	**5608**	BACKFLOW 1 1/2" PREVENTER RPZ WILKINS 975XL (S10-B03)	975XL	$ 625.61	3	$ 1,876.83
1300		**21. SUBTOTAL**				**$ 26,142.96**
1301		**TOTAL BID REPLY**				**$ 775,736.84**
1302		**SUBTOTAL SUMMARY:**				
1303	**1**	**ALL GRINDER COMPENTS/FLOMATIC ONLY**				**$ 440.30**
1304	**2**	**BRASS ITEMS / FORD, MUELLER OR APPROVED EQUAL**				**$ 166,673.58**
1305	**3**	**D/I PARTS, ALL TYPES AMERICAN OR APPROVED EQUAL**				**$ 27,977.34**
1306	**4**	**DUCTILE IRON PIPE / McWANE OR APPROVED EQUAL**				**$ 1,750.92**
1307	**5**	**FIRE HYDRANT & PARTS**				**$ 37,664.83**
1308	**6**	**FLO-CONTROL HOT TAP SADDLES ONLY**				**$ 15,160.90**
1309	**7**	**GENERAL ITEMS**				**$ 23,496.63**
1310	**8**	**LIFT STATION PARTS/ US FOUNDRY OR APPROVED EQUAL**				**$ 2,136.06**
1311	**9**	**METER BOXES & LIDS**				**$ 77,451.64**
1312	**10**	**METERS, WATER & ALL PARTS**				**$ 11,555.85**
1313	**11**	**PIPE, PVC 40, C900**				**$ 40,545.67**
1314	**12**	**PLUMBING PARTS / STREAMLINE-MUELLER OR APPROVED EQUAL**				**$ 3,332.02**
1315	**13**	**PVC PARTS & FITTINGS / SPEARS OR APPROVED EQUAL**				**$ 26,955.94**
1316	**14**	**REPAIR CLAMPS & FERNCOS / SMITH-BLAIR, FORD OR APPROVED EQUAL**				**$ 23,698.05**
1317	**15**	**SCH 80 PIPE & ALL FITTINGS / SPEARS OR APPROVED EQUAL**				**$ 27,905.61**
1318	**16**	**STAINLESS STEEL**				**$ 2,312.41**
1319	**17**	**TAP SADDLES, ALL TYPES / SMITH-BLAIR OR APPROVED EQUAL**				**$ 8,244.34**
1320	**18**	**TOOLS, SHOVELS, RAKES / REED, 3M, RAZORBACK OR APPROVED EQUAL**				**$ 4,999.78**
1321	**19**	**VALVES/GATE, STEEL/CLOW,DEZURIK, KENNEDY OR APPROVED EQUAL**				**$ 26,394.70**
1322	**20**	**NO-LEAD BRASS**				**$ 220,897.31**
1323	**21**	**METERS, WATER & ALL PARTS**				**$ 26,142.96**
1324		**TOTAL**				**$ 775,736.84**

1325 **PSL Part**

1326 **FOR ITEMS NOT IDENTIFIED IN BID, PROVIDE DISCOUNTS FROM THE FOLLOWING MANUFACTURERS LIST PRICE:**

	Item #		Total
1328	1088	SMITH-BLAIR:	0.00%
1329	1089	CLOW:	0.00%
1330	1090	JCM:	0.00%
1331	1091	ROMAC:	0.00%
1332	1092	MUELLER:	0.00%
1333	1093	AR: AIR RELEASE	0.00%
1334	1094	VAL-MATIC:	0.00%
1335	1095	SPEARS:	0.00%
1336	1096	FLO-CONTROL:	0.00%
1337	1097	KENNEDY:	0.00%
1338	1098	CUSTOM FAB:	0.00%
1339	1099	FORD:	0.00%
1340	1100	UNION/TYLER:	0.00%

DRUG-FREE WORKPLACE FORM

The undersigned vendor in accordance with Section 287.087, Florida Statutes hereby certifies that HD Supply Waterworks, Ltd. does:
(Name of Business)

1. Publish a statement notifying employees that the unlawful manufacture, distribution, dispensing, possession, or use of a controlled substance is prohibited in the workplace and specifying the actions that will be taken against employees for violations of such prohibition.

2. Inform employees about the dangers of drug abuse in the workplace, the business's policy of maintaining a drug-free workplace, any available drug counseling, rehabilitation, and employee assistance programs, and the penalties that may be imposed upon employees for drug abuse violations.

3. Give each employee engaged in providing the commodities or Contractual services that are under bid a copy of the statement specified in subsection (1).

4. In the statement specified in subsection (1), notify the employees that, as a condition of working on the commodities or Contractual services that are under bid, the employee will abide by the terms of the statement and will notify the employer of any conviction of, or plea of guilty or nolo contendere to, any violation of Chapter 893 or of any controlled substance law of the United States or any state, for a violation occurring in the workplace no later than five (5) days after such conviction.

5. Impose a sanction on, or require the satisfactory participation in a drug abuse assistance or rehabilitation program if such is available in the employee's community, by any employee who is so convicted.

6. Make a good faith effort to continue to maintain a drug-free workplace through implementation of this section.

As the person authorized to sign the statement, I certify that this firm complies fully with the above requirements.

Susan Helm
Bidder's Signature

3-27-12
Date

CHECKLIST
Bid #20120009
Suppliers for Water and Sewer Products

Name of Bidder: HD Supply Waterworks, Ltd.

This checklist is provided to assist Bidders in the preparation of their bid response. Included in this checklist are important requirements that are the responsibility of each Bidder to submit with their response in order to make their bid response fully compliant. This checklist is only a guideline -- it is the responsibility of each Bidder to read and comply with the Invitation to Bid in its entirety.

✓ Drug-Free Workplace Form uploaded to Demandstar.

✓ Copy of $40,000.00 Bid Bond (or other form of security) uploaded to Demandstar (the original **MUST** be received within 3business days after the opening).

✓ E-Bid Reply Sheet #20120009 uploaded to Demandstar.

✓ E-Bid Reply Excel Spreadsheet uploaded to Demandstar.

✓ All pricing has been mathematically reviewed and all corrections have been initialed.

✓ All price totals have been thoroughly checked.

✓ Each E-Bid Addendum (if applicable) is acknowledged.

✓ Copy of Current Insurance Certificate in accordance with Section V of the Contract Form uploaded to Demandstar.

✓ Copy of License or certificates uploaded to Demandstar.

✓ Reviewed the Contract and accept all City Terms and Conditions

THIS FORM SHOULD BE RETURNED WITH YOUR E-BID REPLY SHEET

April 2, 2012

Bid# 20120009

Title: SUPPLIERS FOR WATER AND SEWER PRODUCTS

DUE: APRIL 4, 2012 @3:00 PM

EXCEPTIONS

ALL PIPE (DI, PVC, CTS, ETC..) PRICING WILL BE REVIEWED QUARTERLY

FOR ALL ITEMS NOT IDENTIFIED IN BID, HD SUPPLY WATERWORKS, LTD. WILL SELL TO THE CITY OF PT. ST. LUCIE 12% OVER REPLACEMENT COST

CITY OF PORT ST LUCIE
121 SW Port St. Lucie Boulevard
Port St. Lucie, Florida, 34984
772-871-5223

REFERENCE CHECK FORM
Bidder Instructions: Fill out top portion only.
(Please print or type)

E-Bid #20120009
Title: **SUPPLIERS FOR WATER AND SEWER PRODUCTS**

Bidder/Respondent: Ferguson Waterworks Inc.

Reference: Martin County Utilities Fax #: 772-692-7381
Email: BHESS@MARTIN.FL.US Telephone #: 772-260-2419
Person to contact: Bev Hess

Reference Instructions: The above Bidder has given your name to the City of Port St. Lucie as a reference. Please complete the information below and fax within five (5) days to 772-871-7337.

Describe the scope of work of the contract awarded by your firm to this Contractor.

Was the project completed on time and within budget?

What was the project completion date?

How many projects has this vendor completed for you within the past 5 years?

What problems were encountered (claims)?

How many change orders were requested by this Contractor?

How would you rate the contractor on a scale of low (1) to high (10) for the following?

Professionalism _____ Final Product _____
Qualifications _____ Cooperation _____
Budget Control _____ Reliability _____

Would you contract with this Contractor again? Yes [ ] No [ ] Maybe [ ]
Comments:

Thank you.

For OMB Use Only	
Reference Checked	
Clerk Checked	

DRUG-FREE WORKPLACE FORM

The undersigned vendor in accordance with Section 287.087, Florida Statutes hereby certifies that FERGUSON WATERWORKS does:
(Name of Business)

1. Publish a statement notifying employees that the unlawful manufacture, distribution, dispensing, possession, or use of a controlled substance is prohibited in the workplace and specifying the actions that will be taken against employees for violations of such prohibition.

2. Inform employees about the dangers of drug abuse in the workplace, the business's policy of maintaining a drug-free workplace, any available drug counseling, rehabilitation, and employee assistance programs, and the penalties that may be imposed upon employees for drug abuse violations.

3. Give each employee engaged in providing the commodities or Contractual services that are under bid a copy of the statement specified in subsection (1).

4. In the statement specified in subsection (1), notify the employees that, as a condition of working on the commodities or Contractual services that are under bid, the employee will abide by the terms of the statement and will notify the employer of any conviction of, or plea of guilty or nolo contendere to, any violation of Chapter 893 or of any controlled substance law of the United States or any state, for a violation occurring in the workplace no later than five (5) days after such conviction.

5. Impose a sanction on, or require the satisfactory participation in a drug abuse assistance or rehabilitation program if such is available in the employee's community, by any employee who is so convicted.

6. Make a good faith effort to continue to maintain a drug-free workplace through implementation of this section.

As the person authorized to sign the statement, I certify that this firm complies fully with the above requirements.

Ferney Montoya w/Ferguson Inc
Bidder's Signature

3/22/12
Date

BID BOND

KNOW ALL BY THESE PRESENTS, That we, HD Supply Waterworks, Ltd.

of 7374 Commercial Circle, Fort Pierce, FL 34951

(hereinafter called the Principal), as Principal, and Westchester Fire Insurance Company, 436 Walnut Street, Philadelphia, PA 19106 (hereinafter called the Surety), as Surety, are held and firmly bound unto City of Port St. Lucie 121 SW Port St. Lucie Boulevard, Port St. Lucie, FL 34984-5099 (hereinafter called the Obligee) in the penal sum of Forty Thousand and NO/100 ------------------- Dollars ($ 40,000.00 ---------) for the payment of which the Principal and the Surety bind themselves, their heirs, executors, administrators, successors and assigns, jointly and severally, firmly by these presents.

THE CONDITION OF THIS OBLIGATION IS SUCH, That WHEREAS, the Principal has submitted or is about to submit a proposal to the Obligee on a contract for

Sealed #20120009 Suppliers for Water and Sewer Products

NOW, THEREFORE, If the said Contract be timely awarded to the Principal and the Principal shall, within such time as may be specified, enter into the Contract in writing, and give bond, if bond is required, with surety acceptable to the Obligee for the faithful performance of the said Contract, then this obligation shall be void; otherwise to remain in full force and effect.

Signed and sealed this 4th day of April, 2012.

HD Supply Waterworks, Ltd.
Principal

Tannis Mattson Attorney-In-Fact Title

Westchester Fire Insurance Company

By Joe Martinez Attorney-in-Fact

LIMITED POWER OF ATTORNEY

The undersigned, HD Supply, Inc., a Delaware corporation (the Company"), hereby designates Sandra Parker, Tannis Mattson, Amy Fowler, Melissa Haddick, Gary D. Eklund, Michael F. Yadach, Barbara S. MacArthur, Virginia B. McManus and Chaun M. Wilson of Marsh USA Inc., a Delaware corporation, as its attorney in fact (referred to as "the Agent") on the following terms and conditions:

1. **Authority to Act**. The Agent is authorized to act for the Company under this Power of Attorney.

2. **Powers of Agent**. The Agent shall have the full power and authority to execute and deliver surety, performance, bid and payment bonds (collectively, "Bonds") in an amount not to exceed $10,000,000.00 per Bond, upon receipt by the Agent of a written request for a Bond from an individual or individuals at the Company or its subsidiaries duly authorized to make such a request.

3. **Reliance by Third Parties**. Third parties may rely upon the representations of the Agent as to all matters regarding powers granted to the Agent. No person who acts in reliance on the representations of the Agent or the authority granted under this Power of Attorney shall incur any liability to the Company for permitting the Agent to exercise any power prior to actual knowledge that the Power of Attorney has been revoked or terminated by operation of law or otherwise.

4. **Indemnification of Agent**. No agent named or substituted in this power shall incur any liability to the Company for acting or refraining from acting under this power, except for such agent's own misconduct or negligence.

5. **Original Counterparts**. Photocopies of this signed Power of Attorney shall be treated as original counterparts.

6. **Compensation**. The Agent shall be reimbursed for reasonable expenses incurred while acting as Agent and may receive reasonable compensation for acting as Agent.

Dated: [DATE] 4/15/10

Name: Carl E. Gillert

Signed in the presence of:

Witness

Witness

Subscribed and sworn to before me on [~~DATE~~]. April 15, 2010.

Notary Public, [COUNTY, STATE] Cobb County GA

My commission expires: 2-22-2014

FEB. 22, 2014

(SEAL)

Power of Attorney

WESTCHESTER FIRE INSURANCE COMPANY

Know all men by these presents: That **WESTCHESTER FIRE INSURANCE COMPANY**, a corporation of the Commonwealth of Pennsylvania pursuant to the following Resolution, adopted by the Board of Directors of the said Company on December 11, 2006, to wit

"RESOLVED, that the following authorizations relate to the execution, for and on behalf of the Company, of bonds, undertakings, recognizances, contracts and other written commitments of the Company entered into the ordinary course of business (each a "Written Commitment")

(1) Each of the Chairman, the President and the Vice Presidents of the Company is hereby authorized to execute any Written Commitment for and on behalf of the Company, under the seal of the Company or otherwise

(2) Each duly appointed attorney-in-fact of the Company is hereby authorized to execute any Written Commitment for and on behalf of the Company, under the seal of the Company or otherwise, to the extent that such action is authorized by the grant of powers provided for in such persons written appointment as such attorney-in-fact

(3) Each of the Chairman, the President and the Vice Presidents of the Company is hereby authorized, for and on behalf of the Company, to appoint in writing any person the attorney-in-fact of the Company with full power and authority to execute, for and on behalf of the Company, under the seal of the Company or otherwise, such Written Commitments of the Company as may be specified in such written appointment, which specification may be by general type or class of Written Commitments or by specification of one or more particular Written Commitments

(4) Each of the Chairman, the President and Vice Presidents of the Company is hereby authorized, for and on behalf of the Company, to delegate in writing any other officer of the Company the authority to execute, for and on behalf of the Company, under the Company's seal or otherwise, such Written Commitments of the Company as are specified in such written delegation, which specification may be by general type or class of Written Commitments or by specification of one or more particular Written Commitments.

(5) The signature of any officer or other person executing any Written Commitment or appointment or delegation pursuant to this Resolution, and the seal of the Company, may be affixed by facsimile on such Written Commitment or written appointment or delegation.

FURTHER RESOLVED, that the foregoing Resolution shall not be deemed to be an exclusive statement of the powers and authority of officers, employees and other persons to act for and on behalf of the Company, and such Resolution shall not limit or otherwise affect the exercise of any such power or authority otherwise validly granted or vested.

Does hereby nominate, constitute and appoint Donald R Gibson, Gina Rodriguez, Joe Martinez, Melissa Haddick, Sandra R Parker, Tannis Mattson, Terri L Morrison, all of the City of HOUSTON, Texas, each individually if there be more than one named, its true and lawful attorney-in-fact, to make, execute, seal and deliver on its behalf, and as its act and deed any and all bonds, undertakings, recognizances, contracts and other writings in the nature thereof in penalties not exceeding Twenty Five million dollars & zero cents ($25,000,000.00) and the execution of such writings in pursuance of these presents shall be as binding upon said Company, as fully and amply as if they had been duly executed and acknowledged by the regularly elected officers of the Company at its principal office.

IN WITNESS WHEREOF, the said Stephen M. Haney, Vice-President, has hereunto subscribed his name and affixed the Corporate seal of the said **WESTCHESTER FIRE INSURANCE COMPANY** this 20 day of January 2011

WESTCHESTER FIRE INSURANCE COMPANY

Stephen M. Haney, Vice President

COMMONWEALTH OF PENNSYLVANIA
COUNTY OF PHILADELPHIA ss.

On this 20 day of January, AD 2011 before me, a Notary Public of the Commonwealth of Pennsylvania in and for the County of Philadelphia came Stephen M. Haney, Vice-President of the **WESTCHESTER FIRE INSURANCE COMPANY** to me personally known to be the individual and officer who executed the preceding instrument, and he acknowledged that he executed the same, and that the seal affixed to the preceding instrument is the corporate seal of said Company; that the said corporate seal and his signature were duly affixed by the authority and direction of the said corporation, and that Resolution, adopted by the Board of Directors of said Company, referred to in the preceding instrument, is now in force.

IN TESTIMONY WHEREOF, I have hereunto set my hand and affixed my official seal at the City of Philadelphia the day and year first above written.

COMMONWEALTH OF PENNSYLVANIA
NOTARIAL SEAL
KAREN E. BRANDT, Notary Public
City of Philadelphia, Phila. County
My Commission Expires September 26, 2014

Notary Public

I, the undersigned Assistant Secretary of the **WESTCHESTER FIRE INSURANCE COMPANY**, do hereby certify that the original POWER OF ATTORNEY, of which the foregoing is a substantially true and correct copy, is in full force and effect

In witness whereof, I have hereunto subscribed my name as Assistant Secretary, and affixed the corporate seal of the Corporation, this 4th day of April 2012

William L. Kelly, Assistant Secretary

THIS POWER OF ATTORNEY MAY NOT BE USED TO EXECUTE ANY BOND WITH AN INCEPTION DATE AFTER January 20, 2013.

THE BACK OF THIS DOCUMENT [illegible]

2011 / 2012 **ST. LUCIE COUNTY LOCAL BUSINESS TAX RECEIPT** RECEIPT # 5999-20020209

BOB DAVIS, CPA, CGFO, CFC, ST. LUCIE COUNTY TAX COLLECTOR

EXPIRES SEPTEMBER 30, 2012

FACILITIES OR MACHINES / ROOMS SEATS EMPLOYEES

TYPE OF BUSINESS 5999 MISC RETAIL (PIPES, ETC)

BUSINESS/ HD Supply Waterworks

DBA NAME

MAILING ADDRESS HD Supply Waterworks
PO Box 8328
Waco, TX 76714-8328

BUSINESS LOCATION 7374 Commerical Cir
Fort Pierce, FL 34951

St Lucie County
1335-802-0026-000/2

A0400001840

NONEXEMPT

RENEWAL	
ORIGINAL TAX	$27.55
PENALTY	
COLLECTION COST	
TOTAL	$27.55

Paid 09/15/2011 27.55 0033-20110915-003369

Law requires this Local Business Tax Receipt to be displayed conspicuously at the place of business in such a manner that it can be open to the view of the public and subject to inspection by all duly authorized officers of the county. Upon failure to do so, the Local Business Taxpayer shall be subject to the payment of another Local Business Tax for the same business, profession, or occupation.

Pursuant to State Law, all Local Business Tax Receipts shall be sold by the Tax Collector beginning July 1st of each year and shall expire on September 30th of the succeeding year. Those Local Business Tax Receipts renewed beginning October 1st shall be delinquent and subject to a delinquency penalty of 10% for the month of October, plus an additional 5% penalty for each month of delinquency thereafter until paid; provided that the total delinquency penalty shall not exceed 25% of the Local Business Tax for the delinquent establishment.

In addition to the penalty, the Tax Collector shall be entitled to a collection cost fee of from $1.00 to $5.00, based on the amount of the Local Business Tax, which shall be collected from delinquent taxpayers after September 30th, of the business year.

This receipt is a Local Business Tax only. It does not permit the Local Business Taxpayer to violate any existing regulatory or zoning laws of the state, county or cities. It also does not exempt the Local Business Taxpayer from any other taxes, licenses or permits that may be required by law.

Local Business Taxes are subject to change according to law.

HD Supply Waterworks
PO Box 8328
Waco, TX 76714-8328

Substitute Form **W-9**

Request for Taxpayer Identification Number and Certification

Give form to the requestor. Do not send to the IRS.

Please print or type

Name HD SUPPLY WATERWORKS, LTD.

Branch # [illegible]

Business name, if different from above.

Check the appropriate box: [X]

Legal Address: number, street, and apt. or suite no. 7394 Commercial Circle

Remittance Address: if different from legal address number, street, and apt. or suite no. PO Box [illegible]

City, state and ZIP code , Ft. Pierce, FL 34951

City, state and ZIP code Atlanta, GA [illegible]

Part I Taxpayer Identification Number (TIN)

Enter your TIN in the appropriate box. The TIN provided must match the name given on Line 1 to avoid backup withholding. For individuals, this is your social security number (SSN). However, for a resident alien, sole proprietor, or disregarded entity, see the Part I instruction on page 3. For other entities, it is your employer identification number (EIN). If you do not have a number, see *How to get a TIN* on page 3.
Note: If the account is in more than one name, see the chart on page 4 for guidelines on whose number to enter.

Employer identification number

03-[illegible]

Part II Certification

Under penalties of perjury, I certify that:

1. The number shown on this form is my correct taxpayer identification number (or I am waiting for a number to be issued to me), **and**
2. I am not subject to backup withholding because: (a) I am exempt from backup withholding, or (b) I have not been notified by the Internal Revenue Services (IRS) that I am subject to backup withholding as a result of a failure to report all interest or dividends, or (c) the IRS has notified me that I am no longer subject to backup withholding, **and**
3. I am an U.S. person (including an U.S. resident alien).

Certification instructions. You must cross out item 2 above if you have been notified by the IRS that you are currently subject to backup withholding because you have failed to report all interest and dividends on your tax return. For real estate transactions, item 2 does not apply.

Sign Here	Signature of U.S. Person	Jeffrey Mondlay	Date 3-12-2012

ACORD®

CERTIFICATE OF LIABILITY INSURANCE

DATE (MM/DD/YYYY) 03/21/2012

THIS CERTIFICATE IS ISSUED AS A MATTER OF INFORMATION ONLY AND CONFERS NO RIGHTS UPON THE CERTIFICATE HOLDER. THIS CERTIFICATE DOES NOT AFFIRMATIVELY OR NEGATIVELY AMEND, EXTEND OR ALTER THE COVERAGE AFFORDED BY THE POLICIES BELOW. THIS CERTIFICATE OF INSURANCE DOES NOT CONSTITUTE A CONTRACT BETWEEN THE ISSUING INSURER(S), AUTHORIZED REPRESENTATIVE OR PRODUCER, AND THE CERTIFICATE HOLDER.

IMPORTANT: If the certificate holder is an ADDITIONAL INSURED, the policy(ies) must be endorsed. If SUBROGATION IS WAIVED, subject to the terms and conditions of the policy, certain policies may require an endorsement. A statement on this certificate does not confer rights to the certificate holder in lieu of such endorsement(s).

PRODUCER
MARSH USA, INC.
TWC ALLIANCE CENTER
3560 LENOX ROAD, SUITE 2400
ATLANTA, GA 30305
Attn: HDSupply.certrequest@marsh.com or fax 212.948.1142
775978-HD-GAWX-11-12 WATER

CONTACT NAME:
PHONE (A/C, No, Ext): FAX (A/C, No):
E-MAIL ADDRESS:

INSURER(S) AFFORDING COVERAGE		NAIC #
INSURER A :	Illinois National Ins Co	23817
INSURER B :	New Hampshire Ins Company	23841
INSURER C :	National Union Fire Ins Co Pittsburgh PA	19445
INSURER D :		
INSURER E :		
INSURER F :		

INSURED
HD SUPPLY, INC.
CUMBERLAND CENTER II
3100 CUMBERLAND BOULEVARD
ATLANTA, GA 30339

COVERAGES **CERTIFICATE NUMBER:** ATL-003054031-02 **REVISION NUMBER:** 2

THIS IS TO CERTIFY THAT THE POLICIES OF INSURANCE LISTED BELOW HAVE BEEN ISSUED TO THE INSURED NAMED ABOVE FOR THE POLICY PERIOD INDICATED. NOTWITHSTANDING ANY REQUIREMENT, TERM OR CONDITION OF ANY CONTRACT OR OTHER DOCUMENT WITH RESPECT TO WHICH THIS CERTIFICATE MAY BE ISSUED OR MAY PERTAIN, THE INSURANCE AFFORDED BY THE POLICIES DESCRIBED HEREIN IS SUBJECT TO ALL THE TERMS, EXCLUSIONS AND CONDITIONS OF SUCH POLICIES. LIMITS SHOWN MAY HAVE BEEN REDUCED BY PAID CLAIMS.

INSR LTR	TYPE OF INSURANCE	ADDL INSR	SUBR WVD	POLICY NUMBER	POLICY EFF (MM/DD/YYYY)	POLICY EXP (MM/DD/YYYY)	LIMITS	
C	GENERAL LIABILITY			2449606	08/30/2011	08/30/2012	EACH OCCURRENCE	$ 2,000,000
	X COMMERCIAL GENERAL LIABILITY						DAMAGE TO RENTED PREMISES (Ea occurrence)	$ 250,000
	CLAIMS-MADE X OCCUR						MED EXP (Any one person)	$ 50,000
							PERSONAL & ADV INJURY	$ 2,000,000
							GENERAL AGGREGATE	$ 5,000,000
	GEN'L AGGREGATE LIMIT APPLIES PER:						PRODUCTS - COMP/OP AGG	$ 4,000,000
	X POLICY PRO-JECT LOC							$
C	AUTOMOBILE LIABILITY			3506461 (AOS)	08/30/2011	08/30/2012	COMBINED SINGLE LIMIT (Ea accident)	$ 5,000,000
B	X ANY AUTO			3506462 (MA)	08/30/2011	08/30/2012	BODILY INJURY (Per person)	$
C	ALL OWNED AUTOS / SCHEDULED AUTOS			3506463 (VA)	08/30/2011	08/30/2012	BODILY INJURY (Per accident)	$
	HIRED AUTOS / NON-OWNED AUTOS						PROPERTY DAMAGE (Per accident)	$
							Self Insured Phy Dmg	$
	UMBRELLA LIAB / OCCUR						EACH OCCURRENCE	$
	EXCESS LIAB / CLAIMS-MADE						AGGREGATE	$
	DED / RETENTION $							$
B	WORKERS COMPENSATION AND EMPLOYERS' LIABILITY			015883999 (AOS)	08/30/2011	08/30/2012	X WC STATU-TORY LIMITS / OTH-ER	
C	ANY PROPRIETOR/PARTNER/EXECUTIVE OFFICER/MEMBER EXCLUDED? Y/N N (Mandatory in NH)	N / A		015884000 (CA)	08/30/2011	08/30/2012	E.L. EACH ACCIDENT	$ 1,000,000
A				015884001 (FL)	08/30/2011	08/30/2012	E.L. DISEASE - EA EMPLOYEE	$ 1,000,000
B	If yes, describe under DESCRIPTION OF OPERATIONS below			015884002 (KY,MA,MO,UT,WI,WV)	08/30/2011	08/30/2012	E.L. DISEASE - POLICY LIMIT	$ 1,000,000

DESCRIPTION OF OPERATIONS / LOCATIONS / VEHICLES (Attach ACORD 101, Additional Remarks Schedule, if more space is required)

RE: SEALED#20120009; E-BID; SUPPLIERS FOR WATER AND SEWER PRODUCTS

CITY OF PORT ST. LUCIE, A POLITICAL SUBDIVISION OF THE STATE OF FLORIDA, ITS OFFICERS, AGENTS AND EMPLOYEES ARE INCLUDED AS ADDITIONAL INSUREDS IF REQUIRED BY WRITTEN CONTRACT ON THE ABOVE GENERAL LIABILITY AND AUTOMOBILE LIABILITY POLICIES, BUT ONLY WITH RESPECT TO LIABILITY ARISING OUT OF THE OPERATIONS OF THE NAMED INSURED. SUBJECT TO THE TERMS, CONDITIONS AND LIMITATIONS OF THE GENERAL LIABILITY POLICY ABOVE, CONTRACTUAL LIABILITY INSURANCE IS INCLUDED IN THE GENERAL LIABILITY POLICY. GENERAL LIABILITY COVERAGE APPLIES SEPARATELY TO EACH INSURED AGAINST WHOM A CLAIM IS MADE OR A SUIT IS BROUGHT. (SEVERABILITY OF INTERESTS AKA CROSS LIABILITY)

CERTIFICATE HOLDER

CITY OF PORT ST. LUCIE
OFFICE OF MANAGEMENT & BUDGET
121 SW PORT ST. LUCIE BOULEVARD
PORT ST. LUCIE, FL 34984-5099

CANCELLATION

SHOULD ANY OF THE ABOVE DESCRIBED POLICIES BE CANCELLED BEFORE THE EXPIRATION DATE THEREOF, NOTICE WILL BE DELIVERED IN ACCORDANCE WITH THE POLICY PROVISIONS.

AUTHORIZED REPRESENTATIVE
of Marsh USA Inc.
Manashi Mukherjee Manashi Mukherjee

© 1988-2010 ACORD CORPORATION. All rights reserved.

The ACORD name and logo are registered marks of ACORD

AGENCY CUSTOMER ID: 775978

LOC #: Atlanta

ADDITIONAL REMARKS SCHEDULE

AGENCY		NAMED INSURED
MARSH USA, INC.		HD SUPPLY, INC. CUMBERLAND CENTER II 3100 CUMBERLAND BOULEVARD ATLANTA, GA 30339
POLICY NUMBER		
CARRIER	NAIC CODE	EFFECTIVE DATE:

ADDITIONAL REMARKS

THIS ADDITIONAL REMARKS FORM IS A SCHEDULE TO ACORD FORM,

FORM NUMBER: 25 FORM TITLE: Certificate of Liability Insurance

HD SUPPLY INSUREDS

HD Supply, Inc. Entity List

HD Supply, Inc.
HDS Holding Corporation
HD Supply Holdings, LLC
HD Supply Holdings, LLC f/k/a Hughes Holdings, LLC
HD Supply Utilities Group, Inc.
HD Supply Utilities Group, Inc. f/k/a Hughes Utilities Group, Inc.
HD Supply Facilities Maintenance Group, Inc.
HD Supply Facilities Maintenance Group, Inc. f/k/a Hughes MRO Group, Inc.
HD Supply Plumbing/HVAC Group, Inc.
HD Supply Plumbing/HVAC Group, Inc. f/k/a Apex Supply Company, Inc.
HD Supply Construction Supply Group, Inc.
HD Supply Construction Supply Group, Inc. f/k/a White Cap Industries, Inc.
HD Supply Waterworks Group, Inc.
HD Supply Waterworks Group, Inc. f/k/a National Waterworks, Inc.
White Cap Construction Supply, Inc.
White Cap Construction Supply, Inc. d/b/a Greenwald Industrial Products Company, Inc.
White Cap Construction Supply, Inc. d/b/a Southwest Rebar Fabricators & Accessories, Inc.
White Cap Construction Supply, Inc. d/b/a Texas Contractors Supply, LP
Brafasco Holdings II, Inc.
Brafasco Holdings, Inc.
HD Supply Distribution Services, LLC
HD Supply Distribution Services, LLC f/k/a Crown Bolt, LLC
HD Supply Repair & Remodel, LLC
HD Supply Repair & Remodel, LLC f/k/a HD Supply Supply Repair & Remodel, LLC f/k/a Contractors' Warehouse, LLC
Southwest Stainless, L.P.
Southwest Stainless, L.P. f/k/a Southwest Stainless, LP
Southwest Stainless, L.P. d/b/a HD Supply Industrial PVF
HD Supply Electrical, Ltd.
HD Supply Electrical, Ltd. f/k/a Hughes Electric Supply, Ltd.
HD Supply Utilities, Ltd.
HD Supply Utilities, Ltd. f/k/a Hughes Utilities, Ltd.
HD Supply Facilities Maintenance, Ltd. d/b/a USA Bluebook
HD Supply Facilities Maintenance, Ltd. f/k/a Hughes MRO, Ltd.
HD Supply Facilities Maintenance, Ltd. f/k/a Maintenance Warehouse
HD Supply Plumbing/HVAC, Ltd.
HD Supply Plumbing/HVAC, Ltd. f/k/a Hughes Plumbing Supply, Ltd.
HD Supply Construction Supply, Ltd.
HD Supply Construction Supply, Ltd. f/k/a Hughes Building Materials Ltd.
HD Supply Construction Supply, Ltd. d/b/a White Cap
HD Supply Construction Supply, Ltd. f/k/a Western Fasteners LLC
HD Supply Waterworks, Ltd.
HD Supply Waterworks, Ltd. f/k/a Hughes Water & Sewer, Ltd.
Williams Bros. Lumber Company, LLC
HD Builder Solutions Group, LLC. f/k/a HD Builders Solutions Group, Inc.

© 2008 ACORD CORPORATION. All rights reserved.

The ACORD name and logo are registered marks of ACORD

AGENCY CUSTOMER ID: 775978
LOC #: Atlanta

ADDITIONAL REMARKS SCHEDULE

AGENCY	NAMED INSURED
MARSH USA INC.	HD SUPPLY, INC. CUMBERLAND CENTER II 3100 CUMBERLAND BOULEVARD ATLANTA, GA 30339
POLICY NUMBER	
CARRIER / NAIC CODE	EFFECTIVE DATE:

ADDITIONAL REMARKS

THIS ADDITIONAL REMARKS FORM IS A SCHEDULE TO ACORD FORM,
FORM NUMBER: 25 FORM TITLE: Certificate of Liability Insurance

HD Supply Fasteners & Tools, Inc
HD Supply Fasteners & Tools, Inc f/k/a C & J Fasteners, Inc.
Cox Lumber Co.
Sunbelt Supply Canada, Inc.
Sunbelt Supply Canada, Inc. f/k/a Hughes Canada, Inc.
HD Supply GP & Management, Inc.
HD Supply GP & Management, Inc. f/k/a Hughes GP & Management, Inc.
HD Supply Management, Inc.
HD Supply Management, Inc. f/k/a Hughes Supply Management, Inc.
HSI IP, Inc.
Madison Corner, LLC
Park-Emp, LLC
ProValue, LLC
HD Supply International Holdings, Inc.
HD Supply International Holdings II, Inc.
HD Supply India Private Limited
HD Supply India Limited
Pro Canadian Holdings I, ULC
HD Supply Canada, Inc.
HD Supply Support Services, Inc.
HD Supply Support Services, Inc. f/k/a Hughes Supply Shared Services, Inc.
HDS IP Holding, LLC
NHDSA, LLC
NHDSA Holdings, LLC
HD Supply Construction Supply, Ltd., d/b/a HD Supply White Cap Construction Supply
Southwest Stainless LP, dba Sunbelt Supply
Solbelt Supply Southwest, S A. de C.V.

THIS INSURANCE IS PRIMARY AND NONCONTRIBUTING ONLY IF REQUIRED BY WRITTEN CONTRACT, WITH RESPECTS TO GENERAL AND AUTOMOBILE LIABILITY. A WAIVER OF SUBROGATION IN FAVOR OF CITY OF PORT ST. LUCIE, A POLITICAL SUBDIVISION OF THE STATE OF FLORIDA, ITS OFFICERS, AGENTS AND EMPLOYEES IS INCLUDED ON THE ABOVE GENERAL LIABILITY, AUTOMOBILE LIABILITY AND WORKERS' COMPENSATION POLICIES AS REQUIRED BY WRITTEN CONTRACT.

© 2008 ACORD CORPORATION. All rights reserved.
The ACORD name and logo are registered marks of ACORD

THIS ENDORSEMENT CHANGES THE POLICY. PLEASE READ IT CAREFULLY.

ADDITIONAL INSURED – OWNERS, LESSEES OR CONTRACTORS – COMPLETED OPERATIONS

This endorsement modifies insurance provided under the following:

COMMERCIAL GENERAL LIABILITY COVERAGE PART

SCHEDULE

Name Of Additional Insured Person(s) Or Organization(s):	Location And Description Of Completed Operations
ANY PERSON OR ORGANIZATION WHOM YOU BECOME OBLIGATED TO INCLUDE AS AN ADDITIONAL INSURED AS A RESULT OF ANY CONTRACT OR AGREEMENT YOU HAVE ENTERED INTO	PER THE CONTRACT OR AGREEMENT
Information required to complete this Schedule, if not shown above, will be shown in the Declarations.	

Section II – Who Is An Insured is amended to include as an additional insured the person(s) or organization(s) shown in the Schedule, but only with respect to liability for "bodily injury" or "property damage" caused, in whole or in part, by "your work" at the location designated and described in the schedule of this endorsement performed for that additional insured and included in the "products-completed operations hazard".

© ISO Properties, Inc., 2004

THIS ENDORSEMENT CHANGES THE POLICY. PLEASE READ IT CAREFULLY.

ADDITIONAL INSURED – OWNERS, LESSEES OR CONTRACTORS – AUTOMATIC STATUS WHEN REQUIRED IN CONSTRUCTION AGREEMENT WITH YOU

This endorsement modifies insurance provided under the following:

COMMERCIAL GENERAL LIABILITY COVERAGE PART

A. **Section II – Who Is An Insured** is amended to include as an additional insured any person or organization for whom you are performing operations when you and such person or organization have agreed in writing in a contract or agreement that such person or organization be added as an additional insured on your policy. Such person or organization is an additional insured only with respect to liability for "bodily injury", "property damage" or "personal and advertising injury" caused, in whole or in part, by:

1. Your acts or omissions; or
2. The acts or omissions of those acting on your behalf;

in the performance of your ongoing operations for the additional insured.

A person's or organization's status as an additional insured under this endorsement ends when your operations for that additional insured are completed.

B. With respect to the insurance afforded to these additional insureds, the following additional exclusions apply:

This insurance does not apply to:

1. "Bodily injury", "property damage" or "personal and advertising injury" arising out of the rendering of, or the failure to render, any professional architectural, engineering or surveying services, including:
   a. The preparing, approving, or failing to prepare or approve, maps, shop drawings, opinions, reports, surveys, field orders, change orders or drawings and specifications; or
   b. Supervisory, inspection, architectural or engineering activities.
2. "Bodily injury" or "property damage" occurring after:
   a. All work, including materials, parts or equipment furnished in connection with such work, on the project (other than service, maintenance or repairs) to be performed by or on behalf of the additional insured(s) at the location of the covered operations has been completed; or
   b. That portion of "your work" out of which the injury or damage arises has been put to its intended use by any person or organization other than another contractor or subcontractor engaged in performing operations for a principal as a part of the same project.

© ISO Properties, Inc., 2004

WAIVER OF OUR RIGHT TO RECOVER FROM OTHERS ENDORSEMENT

This endorsement changes the policy to which it is attached effective on inception date of the policy unless a different date is indicated below.

(The following "attaching clause" need be completed only when this endorsement is issued subsequent to preparation of the policy).

This endorsement, effective 12:01 AM 08/30/2011 forms a part of Policy No. WC 015-88-3999

Issued to HD SUPPLY, INC.

By NEW HAMPSHIRE INSURANCE COMPANY

Premium

We have the right to recover our payments from anyone liable for an injury covered by this policy. We will not enforce our right against the person or organization named in the Schedule. This agreement applies only to the extent that you perform work under a written contract that requires you to obtain this agreement from us.

This agreement shall not operate directly or indirectly to benefit any one not named in the Schedule.

Schedule

THIS AGREEMENT APPLIES ONLY TO THE EXTENT THAT YOU
PERFORM WORK UNDER A WRITTEN CONTRACT THAT
REQUIRES YOU TO OBTAIN THIS AGREEMENT FROM US.

CONTINUED NEXT PAGE

This form is not applicable in California, Kentucky, New Hampshire, New Jersey, North Dakota, Ohio, Tennessee, Texas, Utah, or Washington.

WC 00 03 13
(Ed. 04/84)

Countersigned by _____

Authorized Representative

WAIVER OF OUR RIGHT TO RECOVER FROM OTHERS ENDORSEMENT

This endorsement changes the policy to which it is attached effective on inception date of the policy unless a different date is indicated below.

(The following "attaching clause" need be completed only when this endorsement is issued subsequent to preparation of the policy).

This endorsement, effective 12:01 AM 08/30/2011 forms a part of Policy No. WC 015-88-4001

Issued to HD SUPPLY, INC.

By ILLINOIS NATIONAL INSURANCE CO.

Premium INCLUDED

We have the right to recover our payments from anyone liable for an injury covered by this policy. We will not enforce our right against the person or organization named in the Schedule. This agreement applies only to the extent that you perform work under a written contract that requires you to obtain this agreement from us.

This agreement shall not operate directly or indirectly to benefit any one not named in the Schedule.

Schedule

THIS AGREEMENT APPLIES ONLY TO THE EXTENT THAT YOU
PERFORM WORK UNDER A WRITTEN CONTRACT THAT
REQUIRES YOU TO OBTAIN THIS AGREEMENT FROM US.

CONTINUED NEXT PAGE

This form is not applicable in California, Kentucky, New Hampshire, New Jersey, North Dakota, Ohio, Tennessee, Texas, Utah, or Washington.

WC 00 03 13
(Ed. 04/84)

Countersigned by _____

Authorized Representative

THE WINNING COMBINATION

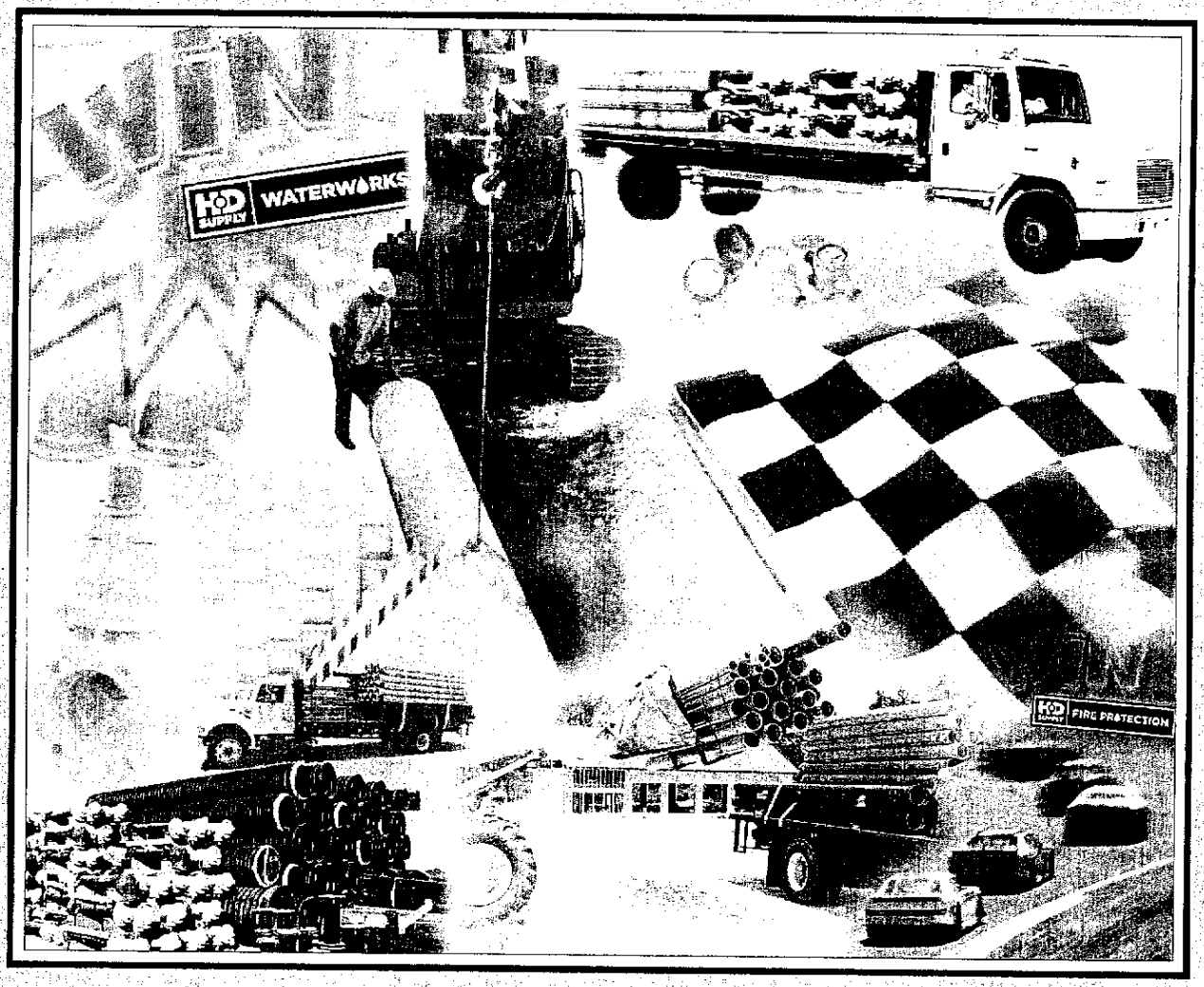

Winning Combination

- Comprehensive Inventory Near You.
- The Industry's Largest Fleet of Delivery Vehicles.
- Customer Advantage Programs That Put You Ahead of The Curve.

HD SUPPLY | WATERWORKS℠

THE TECHNOLOGY THAT FITS YOUR BUSINESS, AS WELL AS YOUR SPECIFIC INFORMATION NEEDS.

With over 265 branches in 41 states and a fleet of more than 1,000 delivery vehicles, we're where you want us, when you want us.

We're Your Winning Combination.

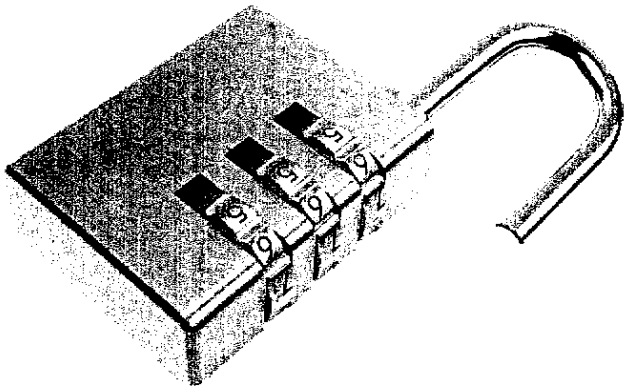

Unlock The Potential. Today.

waterworks.hdsupply.com
Local Service, Nationwide℠

CUSTOMER ADVANTAGE PROGRAMS

☐ **SERVICES BY EMAIL**
- Invoices by Email
- Statements by Email
- Proof of Delivery by Email

☐ **JOB MANAGEMENT SERVICES**
Complete tracking of all material to be or already shipped to a specific job, including identification of "overage" and "underage".

☐ **ESTIMATING SOFTWARE**
Our free-use PowerScope™ software provides you with everything you need to quickly and accurately prepare professional bids online.

☐ **MATERIAL MANAGEMENT ONLINE**
Enter new orders, track existing orders and manage your account quickly and easily online and at your convenience.

☐ **REPORTS ON DEMAND**
A variety of useful reports are available for you to print to help you review details and manage your account.

☐ **INVENTORY SERVICES**
Let us help you manage your inventory using our integrated bar code and replenishment technology to help you keep the right material on hand when you need it.

☐ **DATABASE SUPPORT**
Update critical data in your own software database with pricing and product information provided from our vast database.

HD SUPPLY WATERWORKS℠

521 Brass Check Valve • Spec Sheet

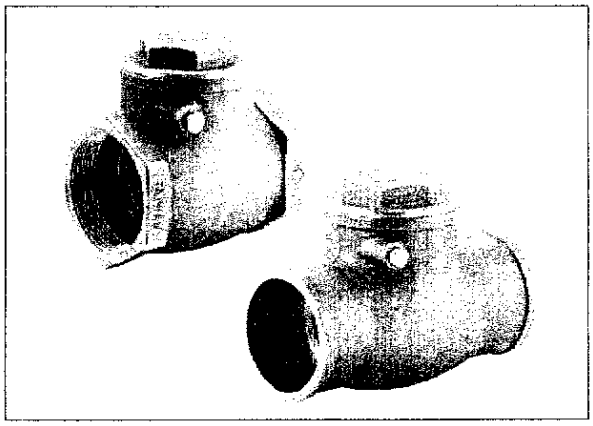

FEATURES & BENEFITS

- 200 WOG
- Cast Brass Body
- Swing Type
- Threaded Ends Comply with ANSI B2.1 3/8" - 4"
- Solder Ends Comply with ANSI B16.18 1/2" - 4"
- Valves are Tested in Accordance w/MSS-SP-82

Application: Commercial, Light Industrial for Water, Oil, Gas or Steam.

MATERIAL SPECIFICATIONS

No.	Part	Material
1	Name Plate	Aluminum A1100
2	Cap	Brass B584 C85710
3	Packing	Fibre "H"
4	Disc	Brass B584 C85710
5	Body	Brass B584 C85710
6	Bolt	Brass B16 C36000
7	Pin	Brass B124 C37700

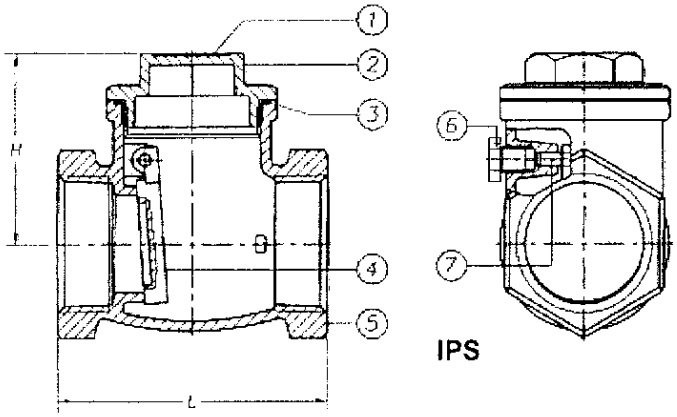

IPS

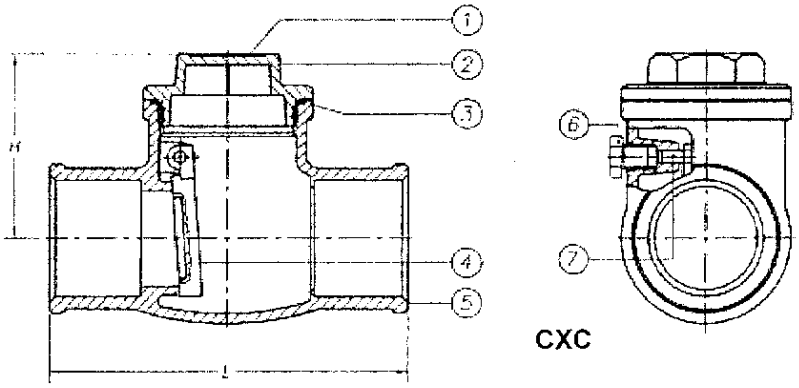

CXC

DIMENSIONS

Size	H	L (IPS)	L (CXC)	Weight (lbs)
3/8"	1.42	2.09	-	.39
1/2"	1.42	2.09	2.40	.42
3/4"	1.56	2.36	3.15	.55
1"	1.77	2.62	3.51	.75
1-1/4"	2.07	3.19	4.16	1.34
1-1/2"	2.17	3.55	4.57	1.69
2"	2.74	4.22	5.48	2.64
2-1/2"	3.09	5.14	6.90	4.8
3"	3.80	5.77	7.68	6.87
4"	4.26	6.84	9.48	11.36

MATCO-NORCA

Global sourcing. National compliance. Local service.

CALIFORNIA 5593 Fresca Dr., La Palma CA 90623 • Toll Free: 866-532-8306 • Fax: 866-532-8307
TEXAS 1150 Silber Rd., Houston TX 77055 • Toll Free: 800-935-5456 • Fax: 713-680-2999
NEW YORK PO Box 27, Rt. 22, Brewster NY 10509 • Toll Free: 800-431-2082 • Fax: 845-278-9056
WEB: **www.matco-norca.com** EMAIL: **mail@matco-norca.com**

521N Brass Check Valve • Spec Sheet

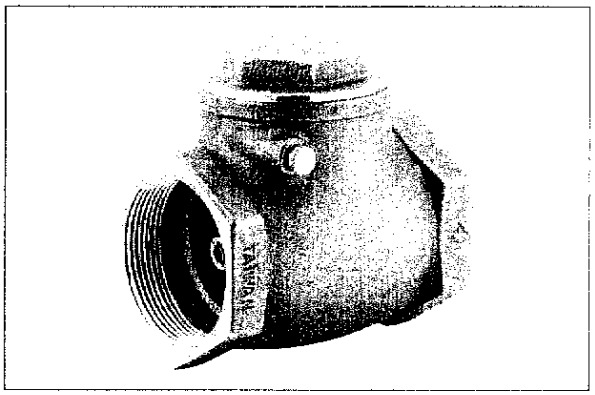

FEATURES & BENEFITS

- 200 WOG-125 SWP
- Cast Brass Body
- Swing Type
- Threaded Ends Comply with ANSI B2.1 3/8" - 4"
- Valves are Tested in Accordance w/MSS-SP-82

Application: Commercial, Light Industrial for Water, Oil, Gas or Steam.

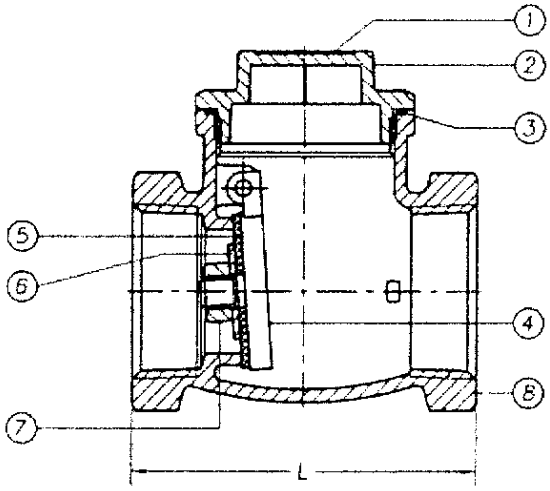

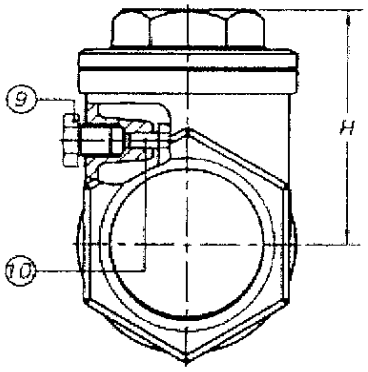

MATERIAL SPECIFICATIONS

No.	Part	Material
1	Name Plate	Aluminum A1100
2	Cap	Brass B584 C85710
3	Packing	Fibre "H"
4	Disc Holder	Brass B584 C85710
5	Seat Packing	BUNA-N
6	Washer	Brass B584 C85710
7	Seat Nut	Brass B124 C37700
8	Body	Brass B584 C85710
9	Bolt	Brass B16 C36000
10	Pin	Brass B124 C37700

DIMENSIONS

Size	H	L	Weight (lbs)
3/8"	1.42	2.09	.39
1/2"	1.42	2.09	.42
3/4"	1.56	2.36	.55
1"	1.77	2.62	.75
1-1/4"	2.07	3.19	1.34
1-1/2"	2.17	3.55	1.69
2"	2.74	4.22	2.64
2-1/2"	3.09	5.14	4.8
3"	3.80	5.77	6.87
4"	4.26	6.84	11.36

MATCO-NORCA

Global sourcing. National compliance. Local service.

CALIFORNIA 5593 Fresca Dr., La Palma CA 90623 • Toll Free: 866-532-8306 • Fax: 866-532-8307
TEXAS 1150 Silber Rd., Houston TX 77055 • Toll Free: 800-935-5456 • Fax: 713-680-2999
NEW YORK PO Box 27, Rt. 22, Brewster NY 10509 • Toll Free: 800-431-2082 • Fax: 845-278-9056
WEB: **www.matco-norca.com** EMAIL: **mail@matco-norca.com**

530 Bronze Swing Check Valve

MATCO-NORCA

❖ horizontal pattern ❖ bronze disc ❖ threaded cap

300 PSI Non-Shock WOG 150 PSI SWP

Applications: Commercial, Light Industrial for Water, Oil, Gas and Steam

Threaded Ends Conform to ANSI Standards B2.1
Valves are Tested in Accordance with MSS-SP-82

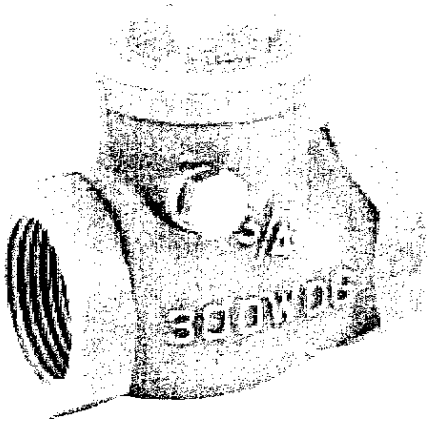

SIZE (inch)	d	L	H	Wts (lbs)
3/8	.49	2.09	1.46	.46
1/2	.51	2.09	1.46	.52
3/4	.75	2.36	1.61	.64
1	.98	2.76	1.85	.90
1-1/4	1.22	3.19	2.24	1.46
1-1/2	1.46	3.53	2.44	1.88
2	1.93	4.25	2.72	2.78
2-1/2	2.21	5.39	3.38	5.34
3	2.68	5.91	3.62	7.26
4	3.54	7.09	4.33	12.50

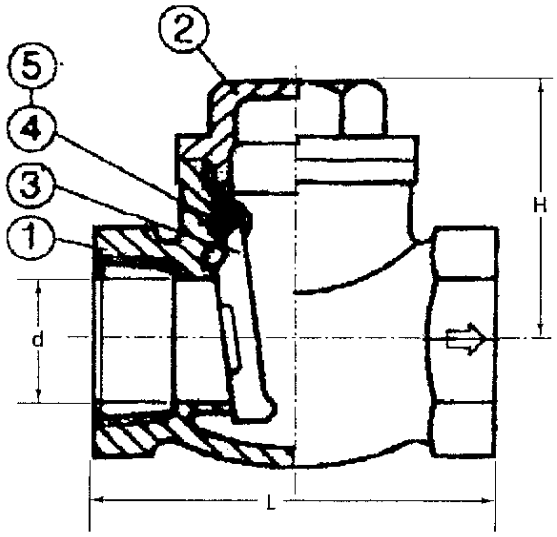

NO.	PART	MATERIAL	ASTM SPEC
1	Body	Bronze	B-62
2	Cover	Bronze	B-62
3	Disc	Bronze	B-62
4	Pin	Brass Rod	B-16
5	Bolt	Brass Rod	B-16

Product Spec Sheet

MATCO-NORCA **BREWSTER:** TEL: 800-431-2082 FAX: 800-640-2252 **HOUSTON:** TEL: 800-935-5456 FAX: 800-683-4247

525T Bronze Inline Check Valve • Spec Sheet

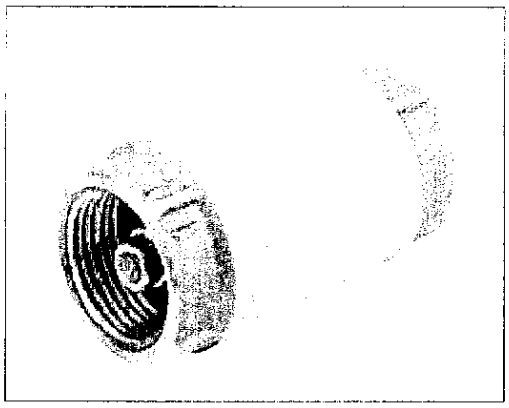

FEATURES & BENEFITS

- ISO-9002
- In-Line Check Valve- Spring Loaded
- 200 WOG
- Bronze Body
- Threaded Ends Comply with ANSI B2.11
- Sizes 1/2" – 2"

MATERIAL SPECIFICATIONS

No.	PART	MATERIALS
1	Stem Nut	Stainless Steel
2	Spring Holder	Stainless Steel
3	Spring	Stainless Steel
4	Stem House	Polyacetal
5	Body	Bronze
6	O-Ring	BUNA-N
7	Stem	Bronze

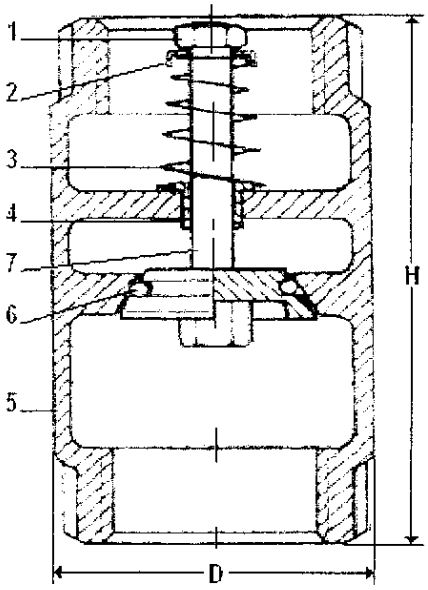

DIMENSIONS

Size	H	D
1/2"	2.40	1.26
3/4"	2.74	1.50
1"	3.23	1.77
1-1/4"	3.63	2.13
1-1/2"	4.04	2.36
2"	5.04	3.03

MATCO-NORCA

Global sourcing. National compliance. Local service.

CALIFORNIA 5593 Fresca Dr., La Palma CA 90623 • Toll Free: 866-532-8306 • Fax: 866-532-8307
TEXAS 1150 Silber Rd., Houston TX 77055 • Toll Free: 800-935-5456 • Fax: 713-680-2999
NEW YORK PO Box 27, Rt. 22, Brewster NY 10509 • Toll Free: 800-431-2082 • Fax: 845-278-9056
WEB: **www.matco-norca.com** EMAIL: **mail@matco-norca.com**

525C Bronze Inline Check Valve • Spec Sheet

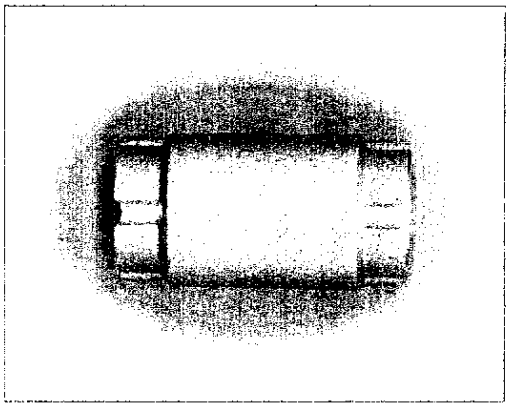

FEATURES & BENEFITS

- ISO-9002
- In-Line Check Valve- Spring Loaded
- 200 WOG
- Bronze Body
- Sweat Ends Comply ANSI B16.18
- Sizes 1/2" – 2"

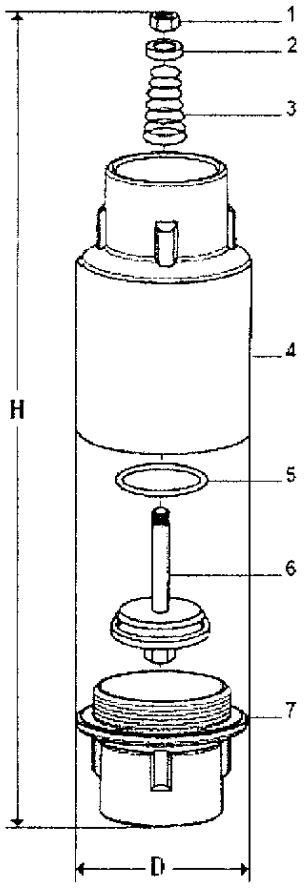

MATERIAL SPECIFICATIONS

No.	PART	MATERIALS
1	Stem Nut	Stainless Steel
2	Spring Holder	Stainless Steel
3	Spring	Stainless Steel
4	Body	Bronze
5	O-Ring	BUNA-N
6	Stem	Bronze
7	Bonnet	Bronze

DIMENSIONS

Size	H	D
1/2"	2.85	1.26
3/4"	3.53	1.50
1"	4.09	1.77
1-1/4"	4.67	2.17
1-1/2"	4.93	2.36
2"	6.06	3.03

MATCO-NORCA

Global sourcing. National compliance. Local service.

CALIFORNIA 5593 Fresca Dr., La Palma CA 90623 • Toll Free: 866-532-8306 • Fax: 866-532-8307
TEXAS 1150 Silber Rd., Houston TX 77055 • Toll Free: 800-935-5456 • Fax: 713-680-2999
NEW YORK PO Box 27, Rt. 22, Brewster NY 10509 • Toll Free: 800-431-2082 • Fax: 845-278-9056
WEB: **www.matco-norca.com** EMAIL: **mail@matco-norca.com**

532 BRONZE SWING CHECK VALVE

MATCO-NORCA™

❖ Bronze Body ❖ "Y" Pattern

300 PSI NON-SHOCK WOG

150 PSI WSP

Product Spec Sheet

ISO-9002

Threaded Ends Conform With ANSI B2.1

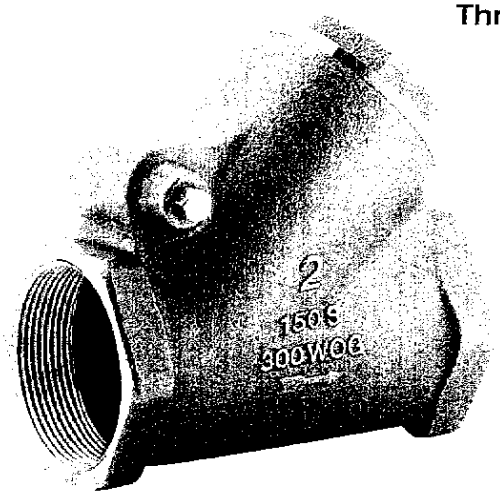

NO.	Part	Material	ASTM Designation
1	Body	Brass	B62
2	Cap	Brass	B62
3	Disc	Brass	B62
4	Plug	Brass	B16
5	Pin	Brass	B16

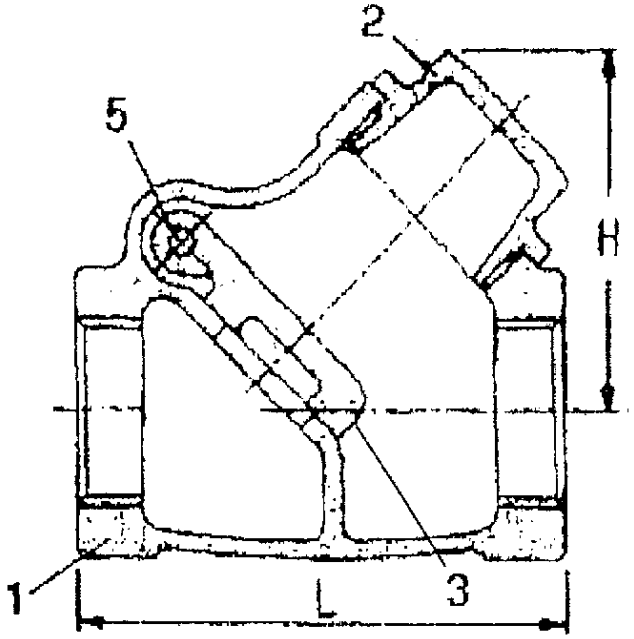

Size	L	H
1/2"	2.21	1.69
3/4"	2.84	2.01
1"	3.15	2.21
1-1/4"	3.74	2.72
1-1/2"	4.33	3.15
2"	5.12	3.82

Designed By JCM Advertising

MATCO-NORCA™

Brewster, NY
TEL: 800-431-2082
FAX: 800-640-2252

Houston, TX
TEL: 800-935-5456
FAX: 800-683-4247

La Palma, CA
TEL: 866-532-8306
FAX: 866-532-8307

Americus, GA
TEL: 800-433-7526
FAX: 800-533-5134

e-mail: mail@matco-norca.com www.matco-norca.com

Bid Reply Sheet
Bid # 2012009
Suppliers for Water and Sewer Products

1. **COMPANY NAME**: Ferguson Waterworks

DIVISION OF: Ferguson Enterprise Inc.

PHYSICAL ADDRESS: 4510 Prosperity Drive Ft. Pierce, FL 34981

MAILING ADDRESS: 4510 Prosperity Drive Ft. Pierce, FL 34981

CITY, STATE, ZIP CODE: Ft. Pierce, FL 34981

TELEPHONE NUMBER: ( ) 772-467-0137 FAX NO. ( ) 772-467-0472

CONTACT PERSON: Ferney Montoya E-MAIL: Ferney.Montoya@Ferguson.com

2. **ORGANIZATIONAL PROFILE**: (complete all appropriate information)

Is the firm incorporated? (Yes)--No If yes, in what state? Virginia

Frank W. Roach
President

James A. Feltman
Vice President

Brenda Crowder
Treasurer

How long in present business: 25 years How long at present location: 3 years

Is firm a minority business: Yes--(No) Does firm have a drug-free workplace program: (Yes)--No
If no, is your company planning to implement such a program? _____

Within the previous 5 fiscal years has your organization been involved in litigation, major disputes, contract defaults, or liens? If so, please list the name of the project and explain nature and current status of the project.

NO

3. **ADDENDUM ACKNOWLEDGMENT** - Bidder acknowledges that the following addenda have been received and are included in its proposal/bid:

Addendum Number	Date Issued
Addendum #1	3/19/2012
Addendum #2	3/27/2012
Addendum #3	3/27/2012
Addendum #4	4/2/2012

4. VENDOR'S LIST – If your company offers commodities other than the one specified for this bid, and you wish to be put on the vendor's list, please contact Onvia.com at (800) 711-1712. Bid Tabulation Reports are advertised on the City's Web Site at www.Cityofpsl.com.

5. BID RESPONSE:

5.1 Bidder will/ will not accept the Purchasing Card (Visa).
(please circle one)

5.2 Percentage of discount when payment is made with Visa: Ø %

5.3 In accordance with Section 2.4 of the specifications, if unable to supply pipe within the required one (1) day time frame, please indicate proposed delivery time from receipt of order. 7-14 Days

5.4 Indicate "Floor Stock" quantities kept in inventory as referenced in Section 2.5:

1.6 million in inventory

5.5 Please state the electronic order entry system offered: Ferguson Online

5.6 List location of warehouse site for material pick-up. Ft. Pierce, FL

5.7 If brands specified are not being bid, please list all "or equal" brands:

E-Bid Reply Sheet Totals $ 869,321.26

Bidders are cautioned that the anticipated quantities used for this computation will be estimates. The City makes no guarantee as to the actual quantity that will be utilized during the Contract period. A unit price for each item offered shall be shown, and such price shall include packing and shipping unless otherwise specified.

6. INSURANCE CERTIFICATES LICENSE - Bidders are required, in accordance with Section 5, to submit a copy of their Insurance Certificate for the type and dollar amount of insurance they currently maintain. Bidders are required to submit all licenses and certifications required to perform this project.

7. COMPLETION OF FORM - An authorized representative of the firm offering this Bid must complete this form in its entirety. Prices entered herein shall not be subject to withdrawal or escalation by Bidder. The City reserves the right to hold proposals and bid guarantees for a period not to exceed 90 days after the date of the bid opening stated in the Invitation to Bid before awarding the Contract. Contract award constitutes the date that City Council executes the motion to award the bid.

8. CONTRACT - Bidder agrees to comply with all requirements stated in the specifications for this bid.

9. CERTIFICATION

This bid is submitted by: Name (print) Ferney Montoya who is an officer of the above firm duly authorized to sign bids and enter into Contracts. I certify that this bid is made without prior understanding, Contract, or connection with any corporation, firm, or person submitting a bid for the same materials, supplies, or equipment, and is in all respects fair and without collusion or fraud. I understand collusive bidding is a violation of State and Federal law and can result in fines, prison sentences, and civil damage awards. I agree to abide by all conditions of this bid.

Ferney Montoya w/ FERGUSON INC — 3/22/12

Signature — Date

10. Bidder has read and accepts the terms and conditions of the City's standard Contract:

Ferney Montoya w/ FERGUSON INC. — Ft. Pierce Branch Manager

Signature — Title

If a corporation renders this Bid, the corporate seal attested by the secretary shall be affixed below. Any agent signing this Bid shall attach to this form evidence of legal authority.

(seal)

Balance of page left blank

ADDENDUM #2 - REVISED BID REPLY SPREADSHEET
E-BID #20120009

	A	B	E	G	H	I
1		**Company Name:**				
2	**Item**	**Item Description**	**Mfg. Part No.**	**Unit Price**	**Yrly Qty Est**	**Total**
3		**1. ALL GRINDER COMPENTS/FLOMATIC ONLY**				
4	**3328**	VALVE BALL CHECK 1-1/4IN PVC - 208T (S04-B19)	208T	$ 34.70	119	$ 4,129.30
5		**1. SUBTOTAL**				**$ 4,129.30**
6		**2. BRASS ITEMS / FORD, MUELLER OR APPROVED EQUAL**				
7	**10**	ADAPTER HYD 2 1/2" x 2" FXM SWIVEL (S06-B33)		$ 63.88	5	$ 319.40
8	**283**	VALVE SWING CHECK 1 1/2" BRASS M31 5 PER BX (S06-F08)	M31	$ 28.00	553	$ 15,484.00
9	**566**	VALVE 1-1/2IN BALL MxFL - BF83-666W BRASS (S06-E39)	BF83-666W	$ 100.10	1	$ 100.10
10	**567**	VALVE 2IN BALL MIPxMF LW BRASS - BF83-77W FORD (S06-E41)	BF83-77W	$ 161.95	2	$ 323.90
11	**568**	CORP 1-1/2IN STOP MPTxCTS/PJ - BF1100-6 (S06-E40)	BF1100-6	$ 78.31	1	$ 78.31
12	**569**	BALL CORP 1-1/2IN MxF - FB1700-6 (S06-D05)	FB1700-6	$ 75.76	1	$ 75.76
13	**570**	BALL CORP 2IN MxF BRASS - FB1700-7 *2 PER BX* (S06-E38)	FB1700-7	$ 122.55	8	$ 980.40
14	**578**	BACKFLOW 3/4IN VAC BRKR 8B07 - WATTS EDP# 0061992 (S06-E45)	8B07 / 61992	$ 16.30	7	$ 114.10
15	**592**	NIPPLE 3/4xCL TBE BRASS - 2012-001 (S06-E26)	2012-001	$ 1.90	112	$ 212.80
16	**593**	NIPPLE 1IN X CL BRASS - 2016-001 (S06-E23)	2016-001	$ 2.80	41	$ 114.80
17	**594**	NIPPLE 1IN x 3IN BRASS TBE - 2016-300 (S06-E22)	2016-300	$ 4.60	1	$ 4.60
18	**595**	NIPPLE 1-1/2IN x CL BRASS - 2024-001 (S06-E17)	2024-001	$ 5.40	11	$ 59.40
19	**596**	NIPPLE 1-1/2 x 3IN BRASS - 2024-300 (S06-E18)	2024-300	$ 8.00	8	$ 64.00
20	**597**	NIPPLE 2IN X CL BRASS TBE - 2032-001 (S06-E21)	2032-001	$ 8.20	26	$ 213.20
21	**598**	NIPPLE 2INx4IN TBE BRASS - 2032-400 (S06-E14)	2032-400	$ 13.40	9	$ 120.60
22	**599**	VALVE 3/4IN GATE FPT BRASS - 3407GM300 (S06-F02)	3407GM300	$ 5.80	311	$ 1,803.80
23	**600**	VALVE 1IN GATE FPT BRASS - 200 WOG *5 PER BX* (S06-C01)	200 WOG	$ 7.60	1	$ 7.60
24	**601**	VALVE 1-1/2IN GATE FPT BRASS - #200 WOG FPT *4 PER BX* (S06-C02)	200 WOG	$ 15.70	5	$ 78.50
25	**602**	VALVE 2IN GATE FPT BRASS - #200 WOG FPT *2 PER BX* (S06-C03)	200 WOG	$ 22.80	1	$ 22.80
26	**603**	VALVE 3/4IN HOSE BIBB BRASS - 3407HBM (S06-C11)	3407HBM	$ 3.76	431	$ 1,620.56
27	**604**	VALVE 1IN HOSE BIBB BRASS - #107-265/T-531 MALE (S06-C12)	107-265/T-531	$ 10.00	1	$ 10.00
28	**605**	VALVE 3/4IN STR DUAL CK BRASS - HHS31-323 FORD *8 PER BX* (S06-D22)	HHS31-323	$ 36.12	2155	$ 77,838.60
29	**606**	VALVE 1IN STRAIGHT DUAL CHECK - BRASS FORD#HHS31-344 (S06-D23)	HHS31-344	$ 39.24	21	$ 824.04
30	**607**	CORP 1IN STOP BRASS - CTS/PJ X TAPER MPT		$ 30.43	1	$ 30.43
31	**610**	VALVE 3/4X5/8IN ANGLE KEY - KV13-332W BRASS *12 PER BX* (S06-D28)	KV13-332W	$ 18.70	45	$ 841.50
32	**611**	VALVE 3/4X3/4IN ANGLE KEY - KV43-332WG BRASS *8 PER BX* (S06-D32)	KV43-332WG	$ 23.90	3	$ 71.70
33	**613**	VALVE 1IN ANGLE KEY BRASS - KV13-444W *5 PER BX* (S06-D26)	KV13-444W	$ 28.67	32	$ 917.44
34	**614**	VALVE 1X1IN ANGLE KEY - BRASS P/N-KV43-444WG *5 PER BX* (S06-D27)	KV43-444WG	$ 32.72	2	$ 65.44
35	**615**	COUPLING 3/4IN COMP/SINGLE - C84-33G MPJxCTS/PJ BR 24 bx (S06-D15)	C84-33G	$ 9.00	7	$ 63.00
36	**616**	COUPLING 1IN COMP/SINGLE BRASS C84-44G MPTxCTS/PJ 14 PER BX (S06-D17)	C84-44G	$ 10.67	44	$ 469.48
37	**618**	COUPLING 3/4IN DOUBLE COMP - CTS/PJ #C44-33 BRASS	C44-33G	$ 10.96	1	$ 10.96
38	**620**	COUPLING 2IN COMP DBL GRIP/JNT - BRASS #C44-77G FORD (S06-D09)	C44-77G	$ 51.80	2	$ 103.60
39	**623**	SCREW OIL FOR OPERATING NUT STANDARD TRAFFIC 190703 (B02-28)	190703	$ 20.00	2	$ 40.00
40	**626**	METER COUPLING 3/4IN BRASS - PLUMBERS PIECES (S06-C17)		$ 5.98	75	$ 448.50
41	**627**	METER COUPLING 1 IN BRASS - PLUMBERS PIECE (S06-C18)		$ 9.20	35	$ 322.00
42	**629**	TEE 1IN BRASS FPT (S06-C19)		$ 7.20	13	$ 93.60
43	**630**	ELL 90 2IN ST FxMPT BRASS - 30209E (S06-C23)	30209E	$ 23.90	3	$ 71.70
44	**631**	REDUCER 1X3/4IN BRASS FXM/THD - MUELLER/METER (S06-E31)		$ 2.70	36	$ 97.20
45	**633**	REDUCER 1-1/2 X 1IN MPTxFPT - BRASS (S06-E30)		$ 5.80	118	$ 684.40
46	**634**	REDUCER 2-1/2IN x 2IN MxF - BRASS BUSHING (S06-E33)		$ 17.10	5	$ 85.50
47	**635**	ADAPTER HYD 2 1/2" X 2" BRASS - MNST (S06-B38)		$ 18.13	25	$ 453.25
48	**636**	ADAPTER HYD 2 1/2" x 3/4" BRASS - FNST X MIPT (S06-B34)		$ 11.90	3	$ 35.70
49	**637**	ADAPTER HYD 2 1/2" X 1" BRASS (S06-B35)		$ 12.50	3	$ 37.50
50	**638**	ADAPTER HYD 2 1/2" x 1 1/2" - BRASS (S06-B36)		$ 13.20	1	$ 13.20
51	**639**	ADAPTER HYD 2 1/2" X 2" BRASS FXM (S06-B37)		$ 12.50	3	$ 37.50
52	**644**	HOSE NOZZLE 2 1/2" BRASS AMLOK 84-20-3 (S06-B31)	84-20-3	$ 88.40	1	$ 88.40
53	**651**	RESETTER COPPER 5/8 x 3/4 x 7 - V42-7W (S06-F03)	V42-7W	$ 52.45	114	$ 5,979.30
54	**652**	RESETTER COPPER 5/8 x 3/4 x 9 - V42-9W FORD (S06-F04)	V42-9W	$ 53.10	23	$ 1,221.30
55	**653**	RESETTER COPPER 5/8 X 3/4 X 12 V42-12W (S06-F06)	V42-12W	$ 54.98	18	$ 989.64
56	**654**	RESETTER COPPER 1 X 10IN - FORD V44-10W (S07-E13)	V44-10W	$ 105.05	1	$ 105.05
57	**655**	RESETTER COPPER 1 X 12IN - FORD V44-12W (S07-E14)	V44-12W	$ 107.55	1	$ 107.55
58	**1198**	NIPPLE 1/4" X 2" BRASS 2271-419 (S06-C38)	2271-419	$ 1.22	3	$ 3.66
59	**1307**	BALL 2IN CURB STOP FXF BRASS - B11-77W FORD *2 PER BX* (S06-E43)	B11-77W	$ 132.80	4	$ 531.20
60	**1377**	NIPPLE 1 X 36IN BRASS TBE (S06-E03)		$ 52.40	4	$ 209.60
61	**1378**	NIPPLE 1 1/2 X 36IN BRASS TBE (S06-E04)		$ 91.90	1	$ 91.90
62	**1379**	NIPPLE 2IN X 3IN BRASS TBE - 2032-300 (S06-E15)	2032-300	$ 10.20	27	$ 275.40
63	**1380**	ELL 90 DEG.3/4IN FPTxFPT BRASS - 4501-150 (S06-C27)	4501-150	$ 3.30	1	$ 3.30
64	**1381**	ELL 90 1IN FPT X FPT - BRASS (S06-C28)		$ 5.10	11	$ 56.10
65	**1382**	ELL 1-1/2IN 90 FXF - BRASS (S06-C21)		$ 10.10	1	$ 10.10
66	**1383**	ELL 90 2IN FXF BRASS - 4501-400 (S06-C24)	4501-400	$ 16.40	5	$ 82.00
67	**1572**	ADAPTER METER 1 X 3/4 IN MXF - BRASS #3907A24 PER PR. (S06-E37)	3907A24	$ 15.24	1	$ 15.24
68	**1573**	REDUCER 2 X 1-1/2IN MxF BRASS - HEX BUSHING (S06-E32)		$ 8.60	8	$ 68.80

ADDENDUM #2 - REVISED BID REPLY SPREADSHEET
E-BID #20120009

	A	B	E	G	H	I
69	**1606**	REDUCER 1 X 3/4IN MPTxFPT - BRASS BUSHING (S06-E28)		$ 2.70	69	$ 186.30
70	**1640**	COUPLING 5/8 X 3/4IN METER - C31-23 Ford BRASS (S06-E36)	C31-23	$ 8.56	2	$ 17.12
71	**1655**	REDUCER 1 1/4X1IN MXF/THD - BRASS (S06-E29)		$ 4.60	7	$ 32.20
72	**1656**	NIPPLE 3/4 X 36IN BRASS TBE - 2012-3600 (S06-E02)	2012-3600	$ 34.90	1	$ 34.90
73	**1657**	NIPPLE 2 X 36IN BRASS TBE - 2032-3600 (S06-E01)	2032-3600	$ 118.60	3	$ 355.80
74	**1775**	VALVE 1/2IN BALL FPT BRASS (S06-C04)		$ 3.70	5	$ 18.50
75	**1776**	VALVE 1IN BALL FPT BRASS - 68-100 (S06-C06)		$ 8.20	34	$ 278.80
76	**1809**	REDUCER 2 x 3/4IN MxF BRASS - 3020B07020B07 (S06-E34)	3020B07020B07	$ 10.30	8	$ 82.40
77	**1810**	REDUCER 2x1IN MPTxFPT BRASS - 3020B10 (S06-E35)	3020B10	$ 10.30	15	$ 154.50
78	**1811**	ELL 90 2IN CTS/PJ X CTS/PJ - L44-77 BRASS (S06-D06)	L44-77	$ 108.13	4	$ 432.52
79	**1812**	VALVE 2IN ANGLE MTR STOP FxFLG - FORD #BFA13-777W *2 PER BX* (S06-E42)	BFA13-777W	$ 146.30	4	$ 585.20
80	**1830**	TEE 2IN FPT BRASS (S06-C20)		$ 22.70	7	$ 158.90
81	**2054**	MARKER BRASS - FOR 2" WATER VALVE (S10-D23)		$ 15.00	1	$ 15.00
82	**2055**	VALVE 3/4X1IN ANGLE BRASS - KV13-342W *10 PER BX* (S06-D30)	KV13-342W	$ 19.95	36	$ 718.20
83	**2056**	ADAPTER HYD 2 1/2" X 2" BRASS (S06-B32)		$ 12.50	1	$ 12.50
84	**2091**	COUPLING 2IN FPT x FPT BRASS - 4540-400 flagg (S06-C16)	4540-400	$ 14.10	13	$ 183.30
85	**2459**	CROSS 2IN FPT BRASS (S06-C22)		$ 44.50	1	$ 44.50
86	**2667**	CAP 1-1/4IN THREADED BRASS (S06-C29)		$ 5.10	1	$ 5.10
87	**2668**	ELL 90 3/4IN STREET FxM BRASS - X103-12 (S06-C25)	X103-12	$ 4.30	2	$ 8.60
88	**2669**	ELL 90 1IN STREET FPTxMPT BRAS - X103-16 (S06-C26)	X103-16	$ 7.10	9	$ 63.90
89	**2755**	NUT & 1IN GASKET ASSEMBLY GRIP NUT - BRASS (S06-C34)		$ 7.30	1	$ 7.30
90	**2756**	NUT & 1IN GASKET ASSEMBLY GRIP NUT GJCN4-4 - BRASS (S06-C35)	GJCN4-4	$ 7.30	51	$ 372.30
91	**2762**	VALVE 2IN BALL FPT BRASS - 3420BM200 *2 PER BX* (S06-C08)	3420BM200	$ 27.00	15	$ 405.00
92	**2907**	VALVE 3/4IN BALL FPT BRASS - 3407BM200 (S06-C05)	3407BM200	$ 5.20	131	$ 681.20
93	**3022**	NIPPLE 3/4 X 3IN BRASS (S06-E27)		$ 3.20	25	$ 80.00
94	**3112**	UNION 3/4IN FPT BRASS (S06-C30)		$ 8.60	1	$ 8.60
95	**3113**	UNION 1IN FPT BRASS (S06-C31)		$ 11.40	1	$ 11.40
96	**3126**	UNION 1 1/2IN FPT - BRASS (S06-C32)		$ 19.60	1	$ 19.60
97	**3127**	UNION 2IN 3/PC FPT BRASS - 3020U (S06-C33)	3020U	$ 30.20	1	$ 30.20
98	**3481**	VALVE 1 X 3/4IN STRAIGHT BALL 5/BX- B43-342WG (S06-D29)	B43-342WG	$ 44.77	2	$ 89.54
99	**3484**	VALVE 1X1IN STRAIGHT BALL - BRASS (S06-D31)		$ 49.82	1	$ 49.82
100	**3978**	VALVE 1-1/2IN BALL FPT BRASS 3415BM200 (S06-C07)	3415BM200	$ 18.80	47	$ 883.60
101	**4039**	VALVE 4IN GATE BRASS FPT #300 PART #3440GM300 (S06-C10)	3440GM300	$ 112.30	1	$ 112.30
102	**5325**	COUPLING 1IN DOUBLE COMP BRASS - C44-44G CTS GRIP *12 PER BX* (S06-D20)	C44-44G	$ 12.25	152	$ 1,862.00
103	**5380**	COUPLING 2IN GRIP/JOINT BRASS - C84-77G MPTxCTS/GJ (S06-D18)	C84-77G	$ 37.99	16	$ 607.84
104	**5381**	ELL 90 1IN COMP.GRIP BRASS - L44-44G FORD *8 PER BX* (S06-D21)	L44-44G	$ 17.77	129	$ 2,292.33
105	**5383**	VALVE 3/4x1IN ANGLE U-BRANCH - UV-43-42-WG FORD *8 PER BX* (S06-F01)	UV-43-42-WG	$ 64.62	464	$ 29,983.68
106	**5384**	CORP STOP 1IN BRASS MPTxCTS/G - F1100-4G FORD *6 PER BX* (S06-D24)	F1100-4G	$ 29.01	386	$ 11,197.86
107	**5389**	COUPLING 1-1/2IN FPTxFPT BRASS - 30155 (S06-C15)	30155	$ 8.60	3	$ 25.80
108	**5390**	VALVE ANGLE 3/4 x 1IN BRASS - KV43-342WG GRIP JNT (S06-D25)	KV43-342WG	$ 25.21	315	$ 7,941.15
109	**5403**	VALVE 3IN GATE BRASS FPT - FIG. M300 (S06-C09)	M300	$ 70.50	1	$ 70.50
110	**5406**	BALL 1-1/2IN CURB STOP FPTxFPT - BRASS FORD B11-666W *2 PER BX* (S06-D10)	B11-666W	$ 89.04	1	$ 89.04
111	**5429**	NUT ASSEM 1IN/FORD GRIP JOINTS - GJN4-4 (S06-B26)	GJN4-4	$ 5.46	1	$ 5.46
112	**5430**	NUT ASSEM 2IN/FORD GRIP JOINTS - GJN4-7 (S06-B25)	GJN4-7	$ 16.13	1	$ 16.13
113	**5471**	COUPLING 3/4IN DBL COMP BRASS GRIP/JOINT C44-33G 14/BX (S06-D19)	C44-33G	$ 10.96	3	$ 32.88
114	**5476**	COUPLING 3/4IN FPT x FPT - BRASS (S06-C13)		$ 2.70	14	$ 37.80
115	**5477**	COUPLING 1IN FPT x FPT BRASS (S06-C14)		$ 4.10	9	$ 36.90
116	**5479**	NIPPLE 1IN X 6IN TBE BRASS (S06-E19)		$ 8.70	14	$ 121.80
117	**5588**	NIPPLE 3/4 IN X 6 IN BRASS TBE (S06-E24)		$ 6.00	4	$ 24.00
118	**5589**	NIPPLE 1 IN X 4 IN BRASS TBE (S06-E20)		$ 5.90	12	$ 70.80
119	**5590**	NIPPLE 3/4 IN X 4 IN BRASS TBE (S06-E25)		$ 4.10	4	$ 16.40
120	**5677**	NIPPLE 2IN X 6IN BRASS TBE (S06-E16)		$ 19.70	14	$ 275.80
121	**5748**	VALVE SWING CHECK 2" BRASS M31 2 PER BX (S06-C36)	M31	$ 27.50	11	$ 302.50
122	**5771**	ELL 90 3/4IN COMP GRIP BRASS L44-33G (S06-D16)	L44-33G	$ 14.17	1	$ 14.17
123	**5802**	VALVE 3/4IN X 3/4IN BALL CURB - FORD #B43-332W-G *5 PER BX* (S06-D11)	B43-332W-G	$ 41.41	21	$ 869.61
124	**5898**	NIPPLE 3/4 x 12IN BRASS (S06-E05)		$ 11.40	1	$ 11.40
125	**5899**	NIPPLE 3/4 x 18IN BRASS (S06-E07)		$ 17.50	1	$ 17.50
126	**5900**	NIPPLE 3/4 x 24IN BRASS (S06-E09)		$ 23.30	2	$ 46.60
127	**5901**	NIPPLE 1 x 12IN BRASS (S06-E06)		$ 17.10	4	$ 68.40
128	**5902**	NIPPLE 1 x 18IN BRASS (S06-E08)		$ 26.20	1	$ 26.20
129	**5903**	NIPPLE 1 x 24IN BRASS (S06-E11)		$ 34.90	2	$ 69.80
130	**5904**	NIPPLE 2 x 12IN BRASS (S06-E10)		$ 38.80	2	$ 77.60
131	**5905**	NIPPLE 2 x18IN BRASS (S06-E13)		$ 59.30	2	$ 118.60
132	**5906**	NIPPLE 2 x 24IN BRASS (S06-E12)		$ 82.30	1	$ 82.30
133	**5918**	VALVE 1 1/2 IN FPT x FPT - 2621-015 (S05-D03)	2621-015	$ 18.80	2	$ 37.60
134	**5927**	COPR STOP 3/4 IN BRASS - 3/4 IN F1100-3-G *10 PER BX* (S06-D14)	F1100-3-G	$ 20.11	1	$ 20.11
135	**5983**	COUPLING COMP. 1 1/2" BRASS C44-66G (S06-D08)	C44-66G	$ 38.38	1	$ 38.38
136	**5984**	MALE ADPT. COMP. 1 1/2" BRASS C84-66G (S06-D07)	C84-66G	$ 26.80	1	$ 26.80
137	**6015**	VALVE 1 1/2 CHECK SINGLE HS11-666 *4 PER BX* (S06-E44)	HS11-666	$ 82.10	1	$ 82.10
138	**6031**	MARKER BRASS - FOR 2" SEWER F/M (S10-D11)		$ 15.00	1	$ 15.00
139	**6070**	VALVE BALL METER B13-332W 3/4x1 *6 PER BX* (S06-D13)	B13-332W	$ 36.90	11	$ 405.90
140	**6071**	VALVE BALL METER B13-344W 3/4x1 *5 PER BX* (S06-D12)	B13-344W	$ 40.20	1	$ 40.20

ADDENDUM #2 - REVISED BID REPLY SPREADSHEET
E-BID #20120009

	A	B	E	G	H	I
141	**6072**	MARKER BRASS - FOR 4" WATER VALVE (S10-D12)		$ 15.00	2	$ 30.00
142	**6074**	MARKER BRASS - FOR 6" WATER VALVE (S10-D13)		$ 15.00	1	$ 15.00
143	**6075**	MARKER BRASS - FOR 8" WATER VALVE (S10-D14)		$ 15.00	1	$ 15.00
144	**6076**	MARKER BRASS - FOR 10" WATER VALVE (S10-D15)		$ 15.00	1	$ 15.00
145	**6077**	MARKER BRASS - FOR 12" WATER VALVE (S10-D16)		$ 15.00	1	$ 15.00
146	**6078**	MARKER BRASS - FOR 16" WATER VALVE (S10-D17)		$ 15.00	1	$ 15.00
147	**6079**	MARKER BRASS - FOR 20" WATER VALVE (S10-D18)		$ 15.00	1	$ 15.00
148	**6080**	MARKER BRASS - FOR 24" WATER VALVE (S10-D19)		$ 15.00	1	$ 15.00
149	**6081**	MARKER BRASS - FOR 30" WATER VALVE (S10-D20)		$ 15.00	1	$ 15.00
150	**6082**	MARKER BRASS - FOR 36" WATER VALVE (S10-D21)		$ 15.00	1	$ 15.00
151	**6083**	MARKER BRASS - FOR 42" WATER VALVE (S10-D22)		$ 15.00	1	$ 15.00
152		**2. SUBTOTAL**				**$ 178,701.45**
153		**3. D/I PARTS, ALL TYPES AMERICAN OR APPROVED EQUAL**				
154	**628**	CLEAN OUT 4IN C/I W/BRASS PLUG (S06-B08)		$ 12.00	1	$ 12.00
155	**680**	GASKET 12IN FIELD LOCK (S08-A01)		$ 97.76	1	$ 97.76
156	**734**	MEGALUG 10 IN FOR D/I PIPE (S11-D21)		$ 47.70	1	$ 47.70
157	**834**	RISER 1IN VALVE BOX - 59VR010I (S09-D17)	59VR010I	$ 4.80	44	$ 211.20
158	**835**	RISER 2IN VALVE BOX - 59VR020I (S09-D18)	59VR020I	$ 10.80	63	$ 680.40
159	**836**	RISER 3IN VALVE BOX - 59VR030I (S09-D19)	59VR030I	$ 14.40	49	$ 705.60
160	**837**	RISER 4IN VALVE BOX - 59VR040I (S09-D20)	59VR040I	$ 20.80	36	$ 748.80
161	**868**	GASKET RUBBER 7.25-7.65 F/STEEL COUPLING (S10-A23)		$ 30.00	1	$ 30.00
162	**869**	GASKET 9.40-9.74 STEEL COUPLIN - FORD PN=20377 (S10-A24)	20377	$ 30.00	1	$ 30.00
163	**870**	GASKET RUBBER 9.46-9.85 F/STEEL COUPLING (S10-A25)		$ 30.00	1	$ 30.00
164	**871**	GASKET RUBBER 6.63 F/STEEL COUPLING (S10-A26)		$ 30.00	1	$ 30.00
165	**872**	GASKET RUBBER 8.60-9.06 F/STEEL COUPLING (S10-A27)		$ 30.00	1	$ 30.00
166	**873**	GASKET RUBBER F/STEEL COUPLING - PN=33813 (S10-A28)	33813	$ 30.00	1	$ 30.00
167	**874**	GASKET RUBBER 11.90-12.20 - F/STEEL COUPLING (S10-A29)		$ 30.00	1	$ 30.00
168	**901**	KIT 3IN COMPANION FLANGE D/I (S11-B02)		$ 13.30	1	$ 13.30
169	**902**	KIT 4IN COMPANION FLANGE - DUCTILE IRON (S11-B04)		$ 18.00	1	$ 18.00
170	**903**	KIT 6IN RESTRAINER - 1300 SINGLE FLANGE (S11-A04)		$ 24.50	1	$ 24.50
171	**904**	RESTRAINER FOR 8" PVC BELL JOINT - 1390 1300 (S11-B07)		$ 64.07	1	$ 64.07
172	**905**	KIT MJ 3IN ACCESSORY (S11-B01)		$ 8.50	1	$ 8.50
173	**906**	KIT MJ 4IN ACCESSORY (S11-B03)		$ 9.90	7	$ 69.30
174	**907**	KIT MJ 6IN ACC. WITH GLAND - FLANGE/GASKET/T-BOLT (S11-B05)		$ 17.60	1	$ 17.60
175	**908**	KIT MJ 8IN ACCESSORY (S11-B08)		$ 13.50	2	$ 27.00
176	**909**	KIT MJ 10IN ACCESSORY (S11-B09)		$ 17.70	1	$ 17.70
177	**910**	KIT MJ 12IN ACCESSORY - PART #21AMMJR12 (S11-B10)	21AMMJR12	$ 19.10	1	$ 19.10
178	**911**	KIT MJ 16IN ACCESSORY (S11-B12)		$ 30.20	1	$ 30.20
179	**912**	GASKET 3IN MJ RUBBER (S11-C01)		$ 3.10	1	$ 3.10
180	**913**	GASKET 3IN RUBBER TRANSITION - PART #21AMG503 (S11-C02)	21AMG503	$ 2.90	1	$ 2.90
181	**914**	GASKET MJ 4IN RUBBER (S11-C03)		$ 3.10	24	$ 74.40
182	**915**	GASKET 4IN RUBBER TRANSITION (S11-C04)		$ 3.70	16	$ 59.20
183	**916**	GASKET 6IN MJ RUBBER - FOR D/I PIPE (S11-C05)		$ 3.10	71	$ 220.10
184	**917**	GASKET 6IN TRANSITION RUBBER - 21AMG506 (S11-C06)	21AMG506	$ 4.50	6	$ 27.00
185	**918**	GASKET MJ 8IN RUBBER (S11-C07)		$ 3.90	24	$ 93.60
186	**919**	GASKET 8IN TRANSITION RUBBER (S11-C08)		$ 6.30	1	$ 6.30
187	**920**	GASKET 10IN MJ RUBBER (S11-C09)		$ 4.70	1	$ 4.70
188	**921**	GASKET 10IN TRANSITION RUBBER (S11-C10)		$ 7.60	1	$ 7.60
189	**922**	GASKET MJ 12IN RUBBER (S11-C11)		$ 6.30	23	$ 144.90
190	**923**	GASKET 12IN TRANSITION RUBBER (S11-C12)		$ 8.70	7	$ 60.90
191	**924**	GASKET MJ 16IN RUBBER (S11-C14)		$ 10.30	1	$ 10.30
192	**925**	GASKET MJ 18IN RUBBER (S11-C15)		$ 14.00	1	$ 14.00
193	**926**	FLANGE 3IN COMPANION D/I (S11-D01)		$ 13.89	4	$ 55.56
194	**927**	FLANGE 3IN UNION (S11-D02)		$ 19.58	2	$ 39.16
195	**928**	MEGALUG 3IN FOR D/I PIPE - PART #21AMF8031103 (S11-D03)	21AMF8031103	$ 16.90	1	$ 16.90
196	**929**	MEGALUG 3IN FOR PVC PIPE (S11-D04)		$ 20.50	1	$ 20.50
197	**930**	FLANGE 4IN SPLIT (S11-D05)		$ 40.78	1	$ 40.78
198	**931**	FLANGE 4IN FEMALE THD 8 HOLE - 2404FCCS STEEL (S11-D06)	2404FCCS	$ 22.58	1	$ 22.58
199	**932**	FLANGE 4 IN UNION - PART #2404FU (S11-D07)	2404FU	$ 25.74	4	$ 102.96
200	**933**	MEGALUG 4IN FOR D/I PIPE (S11-D08)		$ 18.00	5	$ 90.00
201	**934**	MEGALUG 4IN FOR PVC PIPE (S11-D09)		$ 22.10	17	$ 375.70
202	**935**	FLANGE 6IN FEMALE THD 8 HOLE - STEEL (S11-D10)		$ 30.11	1	$ 30.11
203	**936**	FLANGE 6IN SPLIT (S11-D11)		$ 49.39	1	$ 49.39
204	**937**	MEGALUG 6IN FOR D/I PIPE (S11-D12)		$ 21.20	4	$ 84.80
205	**938**	MEGALUG 6IN FOR PVC PIPE - 21AMF8062006PV (S11-D13)	21AMF8062006PV	$ 26.80	26	$ 696.80
206	**939**	FLANGE 6IN UNION DUCTILE IRON (S11-D14)		$ 29.61	1	$ 29.61
207	**940**	FLANGE 8IN UNION (S11-D15)		$ 41.16	1	$ 41.16
208	**941**	MEGALUG 8IN FOR D/I PIPE (S11-D16)		$ 32.30	2	$ 64.60
209	**942**	MEGALUG 8IN FOR PVC PIPE (S11-D17)		$ 39.50	24	$ 948.00
210	**943**	RING 8IN SPLIT 1300 (S11-D18)	1300	$ 37.28	1	$ 37.28
211	**944**	FLANGE 10 IN UNION (S11-D19)		$ 72.59	1	$ 72.59
212	**945**	MEGALUG 10IN FOR PVC PIPE (S11-D20)		$ 74.70	1	$ 74.70

ADDENDUM #2 - REVISED BID REPLY SPREADSHEET
E-BID #20120009

	A	B	E	G	H	I
213	**946**	RESTRAINT 12IN SPLIT 1300C (S11-B11)	1300C	$ 71.21	1	$ 71.21
214	**947**	MEGALUG 12IN FOR D/I PIPE (S11-E02)		$ 69.40	1	$ 69.40
215	**948**	FLANGE 12 IN UNION (S11-E03)		$ 86.51	1	$ 86.51
216	**949**	MEGALUG 12IN FOR PVC PIPE (S11-E01)		$ 78.50	32	$ 2,512.00
217	**950**	MEGALUG 16IN FOR D/I PIPE (S11-E04)		$ 126.40	1	$ 126.40
218	**951**	MEGALUG 16IN FOR PVC PIPE (S11-E05)		$ 167.90	1	$ 167.90
219	**952**	FLANGE 16IN UNION (S11-E06)		$ 246.24	1	$ 246.24
220	**953**	MEGALUG 18IN FOR D/I PIPE (S11-E07)		$ 179.10	1	$ 179.10
221	**954**	MEGALUG 18IN FOR PVC PIPE (S11-E08)		$ 208.20	1	$ 208.20
222	**955**	FLANGE 18IN UNION-400C (S11-E09)	400C	$ 278.39	1	$ 278.39
223	**956**	FLANGE 20IN UNION-400C (S11-E10)	400C	$ 336.59	2	$ 673.18
224	**957**	MEGALUG 20IN FOR PVC PIPE (S11-E11)		$ 258.10	1	$ 258.10
225	**996**	BOLT 5/8 X 3IN T-HEAD & NUT 120 b/x (S12-E14)		$ 1.10	4	$ 4.40
226	**997**	BOLT 3/4 X 4IN T-HEAD & NUT - NON-ROTATING (S12-E16)		$ 1.40	24	$ 33.60
227	**998**	BOLT 3/4 X 4IN T-HEAD - 60 PER BOX (S12-E17)		$ 2.30	276	$ 634.80
228	**999**	BOLT 3/4 X 4-1/2IN T-HEAD - & NUT (S12-E18)		$ 2.60	73	$ 189.80
229	**1000**	BOLT 3/4 X 4-1/2IN T-HEAD &NUT - NON ROTATING (S12-E19)		$ 1.50	1	$ 1.50
230	**1001**	BOLT 3/4 X 5IN T-HEAD & NUT (S12-E20)		$ 1.60	52	$ 83.20
231	**1002**	EYEBOLT 3/4IN ANGLED "DUC-LUG" (S12-E21)		$ 2.50	8	$ 20.00
232	**1194**	BEND 90 3IN FLANGED DI - PART #24039F (YD-67)	24039F	$ 43.42	1	$ 43.42
233	**1195**	FLANGE 3IN MJ DI (YD-68)		$ 29.53	1	$ 29.53
234	**1196**	CAP 3IN MJ DI (YD- 70)		$ 12.74	1	$ 12.74
235	**1197**	BEND 45 3IN MJ DI (YD-69)		$ 29.60	1	$ 29.60
236	**1199**	SLEEVE 3 x 12IN MJ DI (YD-64)		$ 27.80	1	$ 27.80
237	**1200**	BEND 45 4IN FLANGED DI (YD-62)		$ 59.70	1	$ 59.70
238	**1201**	BEND 90 4IN FLANGED DI C/L C110 (YD-63)		$ 67.20	1	$ 67.20
239	**1202**	PLUG 4IN MJ DI (YD-60)		$ 15.70	1	$ 15.70
240	**1203**	CAP 4IN MJ DI (YD-61)		$ 13.40	1	$ 13.40
241	**1204**	FLANGE 4IN MJ DI (YD-58)		$ 34.20	7	$ 239.40
242	**1205**	BEND 45 4IN MJ DI (YD-59)		$ 29.60	1	$ 29.60
243	**1206**	BEND 90 4IN MJ DI (YD-56)		$ 35.90	1	$ 35.90
244	**1207**	FLANGE 4IN WELD NECK - R.F. #150 B-16-A105 (S09-A03)	150 B-16-A105	$ 150.00	1	$ 150.00
245	**1208**	SLEEVE 4 x 12IN MJ DI - NOT COATED (YD-53)		$ 29.60	6	$ 177.60
246	**1209**	CAP 6IN MJ DI (YD-50)		$ 23.80	1	$ 23.80
247	**1210**	PLUG 6IN MJ DI (YD-51)		$ 29.60	1	$ 29.60
248	**1211**	FLANGE 6IN UNI-FLANGE - TWO HOLE FOR DI (YD-52)		$ 29.61	1	$ 29.61
249	**1212**	FLANGE 6IN MJ DI (YD-49)		$ 47.50	11	$ 522.50
250	**1213**	BEND 45 6IN FLANGED DI (YD-48)		$ 92.10	1	$ 92.10
251	**1214**	BEND 45 6IN MJ DI (YD-47)		$ 48.10	1	$ 48.10
252	**1215**	BEND 90 6IN FLANGED DI - EPOXY LINED	EPOXY LINED	$ 215.60	1	$ 215.60
253	**1216**	BEND 90 6IN MJ X SPIGOT DI (YD-45)		$ 71.80	1	$ 71.80
254	**1217**	BEND 90 6IN MJ DI CEMENT LINED YD-44)	CEMENT LINED	$ 59.10	1	$ 59.10
255	**1218**	SLEEVE 6 X 12IN MJ DI - CEMENT LINED (YD-43)	CEMENT LINED	$ 53.30	12	$ 639.60
256	**1219**	TEE 6 X 6 X 6 MJ DI (YD-41)		$ 86.30	1	$ 86.30
257	**1220**	FLANGE 8 IN MJ DI (YD-40)		$ 72.40	1	$ 72.40
258	**1221**	CAP 8IN MJ DI - 2108CT (YD-39)		$ 38.80	1	$ 38.80
259	**1222**	BEND 45 8 IN MJ DI CEMENT LINED (YD-38)	CEMENT LINED	$ 70.10	1	$ 70.10
260	**1223**	SLEEVE 8 X 12 MJ DI (YD-37)		$ 87.50	6	$ 525.00
261	**1224**	FLANGE 10 IN MJ DI (YD-36)		$ 125.70	1	$ 125.70
262	**1225**	BEND 45 10 IN MJ DI (YD-35)		$ 102.50	1	$ 102.50
263	**1226**	SLEEVE 10 X 12 IN MJ DI (YD-34)		$ 104.80	1	$ 104.80
264	**1227**	FLANGE 12 IN MJ DI (YD-33)		$ 161.00	1	$ 161.00
265	**1228**	CAP 12 IN MJ DI (YD-32)		$ 74.20	4	$ 296.80
266	**1229**	BEND 45 12IN MJ DI CEMENT LINED (YD-31)	CEMENT LINED	$ 153.50	1	$ 153.50
267	**1230**	SLEEVE 12IN X 12IN MJ DI (YD-30)		$ 141.30	11	$ 1,554.30
268	**1232**	BEND 90 12 IN FLANGED DI (YD-28)		$ 355.50	1	$ 355.50
269	**1233**	FLANGE 16 IN MJ DI (YD-27)		$ 293.00	1	$ 293.00
270	**1234**	SLEEVE 16 X 15 IN MJ DI (YD-26)		$ 271.00	1	$ 271.00
271	**1235**	FLANGE 18 IN MJ DI (YD-25)		$ 448.20	1	$ 448.20
272	**1236**	SLEEVE 18 X 15 IN MJ DI (YD-23)		$ 346.80	1	$ 346.80
273	**1237**	FLANGE 20 IN MJ DI (YD-21)		$ 533.30	1	$ 533.30
274	**1238**	SLEEVE 20 X 15 IN MJ DI (YD-20)		$ 418.60	1	$ 418.60
275	**1239**	LID WATER LOCKING (YD-74)		$ 18.80	11	$ 206.80
276	**1240**	LID SEWER VALVE BOX LOCKING (YD-71)		$ 18.80	2	$ 37.60
277	**1241**	LID WATER NON LOCKING - 5-1/4IN (YD-75)		$ 12.50	85	$ 1,062.50
278	**1242**	VALVE BOX TOP DI 461S (YD-73)	461S	$ 19.20	13	$ 249.60
279	**1244**	VALVE BOX TOP & BOTTOM - 461-S LESS LID (YD-76)	461-S	$ 35.00	61	$ 2,135.00
280	**1254**	REDUCER 6 X 4 IN MJ DI (YD-11)		$ 34.20	1	$ 34.20
281	**1255**	REDUCER 8 X 6 IN MJ DI (YD-12)		$ 49.80	1	$ 49.80
282	**1256**	TEE 6 X 6 X 4 IN MJ DI CEMENT LINED (YD-22)	CEMENT LINED	$ 79.90	1	$ 79.90
283	**1397**	WYE 2-1/2IN X 2-1/2IN PUSH ON - EPOXY COATED FOR D/I (S09-A02)	EPOXY COATED	$ 150.00	1	$ 150.00
284	**2498**	TEE 4 X 4 X 4 IN MJ DI (YD-57)		$ 47.50	1	$ 47.50

	A	B	E	G	H	I
285	**2502**	BEND 11-1/4 3 IN MJ CP DI (YD-66)		$ 22.00	1	$ 22.00
286	**2503**	BEND 11-1/4 4 IN MJ CP DI C153 (YD-55)		$ 26.70	1	$ 26.70
287	**2504**	BEND 22-1/2 3 IN CP DI C153 (YD-65)		$ 18.60	1	$ 18.60
288	**2505**	BEND 22-1/2 4IN MJ CP DI C153 (YD-54)		$ 28.40	1	$ 28.40
289	**2805**	BOLT 3/4 X 3-1/2IN T-HEAD & - NUT *85 PER BX* (S12-E15)		$ 2.10	517	$ 1,085.70
290	**2814**	BEND 90 12IN MJ DI - 21129M (YD-29)	21129M	$ 185.30	1	$ 185.30
291	**2815**	LID SEWER NON LOCKING (YD-72)		$ 12.50	8	$ 100.00
292	**5021**	FLANGE 8 IN BLIND D/I - 8 HOLE		$ 52.70	1	$ 52.70
293	**5388**	ELL 45 DEG. 4IN GALV FPTxFPT		$ 47.90	1	$ 47.90
294	**5462**	EXTENSION 6FT VALVE STEM - PART #65VSE060C	65VSE060C	$ 106.67	1	$ 106.67
295	**5642**	ELL 45 12IN MJ DI		$ 153.50	1	$ 153.50
296	**5643**	KIT 12IN MEGALUG ACCESSORY - FOR PVC		$ 20.90	1	$ 20.90
297	**5772**	SLEEVE 12 X 6IN TAPPING D/I - OD 13.20-13.50		$ 935.70	1	$ 935.70
298	**5781**	TEE 3 x 3 x 3IN FLANGED D/I - PART #2403T030F	2403T030F	$ 62.00	1	$ 62.00
299	**5782**	TEE 3 x 3 x 2IN FLANGED D/I - BRANCH IS 2IN		$ 66.00	1	$ 66.00
300	**5783**	FLANGE 2 IN COMPANION - WITH 2IN FIPT		$ 16.80	1	$ 16.80
301	**5784**	SLEEVE 3IN X 12IN FLANGED - D/I SPOOL PIECE		$ 138.90	1	$ 138.90
302	**5786**	TEE 3 x 3 x 3IN MJ D/I - PART #2103T030M	2103T030M	$ 44.60	1	$ 44.60
303	**5787**	CAP 3IN MJ TAPPED W/2IN IPT - DUCTILE IRON		$ 27.30	1	$ 27.30
304	**5788**	REDUCER 6x4 DI EPOXY LINED - PART #2406R04FE	2406R04FE	$ 176.00	1	$ 176.00
305	**5791**	CROSS 6IN D/I EPOXY LINED - FLANGED #2406X060FE	2406X060FE	$ 344.90	1	$ 344.90
306	**5792**	FLANGE 6x4 REDUCING COMPANION - THRD D/I #2406FC40S	2406FC40S	$ 48.70	1	$ 48.70
307	**5804**	TEE 8IN FLANGED DUCTILE IRON		$ 255.90	1	$ 255.90
308	**5805**	TEE 6IN FLANGED DUCTILE IRON		$ 153.50	1	$ 153.50
309	**5808**	BEND 6IN 90 DEG D/I FLANGED - NOT LINED (YD-46)		$ 104.30	4	$ 417.20
310	**5822**	TEE 8 x 8 x 6IN DUCTILE IRON - FLANGED CEMENT LINED		$ 221.80	1	$ 221.80
311	**5828**	CAP 16IN DUCTILE IRON MJ - W/2" CENTER TH TAP (YD-24)		$ 173.70	1	$ 173.70
312	**5842**	CROSS 4IN DI EPOXY LINE FLANGD - PART #2404X040FE	2404X040FE	$ 216.30	1	$ 216.30
313	**5860**	FLANGE 12 IN BELL - 073019 for C-900 (S07-E09)		$ 179.40	1	$ 179.40
314	**5868**	RESTRAINT FOR 6in P.V.C. - 1390-C - 2 FLANGES (S11-B06)	1390-C	$ 44.80	1	$ 44.80
315	**5938**	GASKET 20" MJ (S11-C16)		$ 12.30	1	$ 12.30
316	**5939**	GASKET 24" MJ (S11-C17)		$ 15.29	1	$ 15.29
317	**5977**	TEE 8 X 8 X 6 MJ DI CEMENT LINED (ORDER ON REQUEST)		$ 107.20	1	$ 107.20
318	**6019**	TEE 24" EPOXY MJ (YD-14)		$ 1,690.70	1	$ 1,690.70
319	**6020**	SLEEVE 24" EPOXY MJ (YD-18)		$ 962.70	1	$ 962.70
320	**6021**	SLEEVE 12" EPOXY MJ (YD-42)		$ 327.30	1	$ 327.30
321	**6022**	MEGALUG 24IN FOR PVC PIPE (S10-E02)		$ 297.90	1	$ 297.90
322	**6023**	GASKET 24" MJ (S11-C18) SEE PART # 5939		$ 15.00	1	$ 15.00
323	**6105**	SLEEVE 6 X 12" MJ DI EPOXY COATED (YD-04)	EPOXY COATED	$ 153.40	1	$ 153.40
324		**3. SUBTOTAL**				**$ 34,116.40**
325		**4. DUCTILE IRON PIPE / McWANE OR APPROVED EQUAL**				
326	**1185**	PIPE 3IN DI C/51 CEMENT LINED (PR4-A01)	C/51 CEMENT LINED	$ 39.40	1	$ 39.40
327	**1186**	PIPE 4IN DI C/51 CEMENT LINED (PR4-A02)	C/51 CEMENT LINED	$ 20.24	5	$ 101.20
328	**1187**	PIPE 6IN D/I CEMENT LINED - CLASS 51 (PR4-C01)	C/51 CEMENT LINED	$ 21.71	1	$ 21.71
329	**1188**	PIPE 8IN DI C/51 CEMENT LINED (PR3-A01)	C/51 CEMENT LINED	$ 29.75	1	$ 29.75
330	**2099**	PIPE 10IN CLASS 51 EPOXY LINED - DI (PR3-C02)	C/51 EPOXY LINED	$ 69.53	1	$ 69.53
331	**2100**	PIPE 10IN CLASS 51 CEMENT LINE - DI (PR3-C01)	C/51 CEMENT LINED	$ 43.15	1	$ 43.15
332	**2101**	PIPE 12IN CLASS 51 EPOXY LINED - DI (PR3-D01)	C/51 EPOXY LINED	$ 79.32	1	$ 79.32
333	**2102**	PIPE 12IN CLASS 51 CEMENT LINE - DI (PR3-E01)	C/51 CEMENT LINED	$ 49.60	1	$ 49.60
334	**2103**	PIPE 16IN CLASS 51 EPOXY LINED - DI (YDP-03)	C/51 EPOXY LINED	$ 109.51	1	$ 109.51
335	**2104**	PIPE 16IN CLASS 51 CEMENT LINE - DI (YDP-01)	C/51 CEMENT LINED	$ 72.24	1	$ 72.24
336	**2105**	PIPE 20IN CLASS 51 EPOXY LINED - DI (YDP-02)	C/51 EPOXY LINED	$ 139.04	1	$ 139.04
337	**2106**	PIPE 20IN CLASS 51 CEMENT LIN - DI (YDP-04)	C/51 CEMENT LINED	$ 93.33	1	$ 93.33
338	**2107**	PIPE 18IN CLASS 51 EPOXY LINED - DI (YDP-06)	C/51 EPOXY LINED	$ 136.84	1	$ 136.84
339	**2108**	PIPE 18IN CLASS 51 CEMENT LINE - DI (YDP-05)	C/51 CEMENT LINED	$ 91.13	1	$ 91.13
340	**2109**	PIPE 24IN CLASS 51 EPOXY LINED - DI (YDP-07)	C/51 EPOXY LINED	$ 172.56	1	$ 172.56
341	**2110**	PIPE 24IN CLASS 51 CEMENT LINE - DI (YDP-08)	C/51 CEMENT LINED	$ 115.87	1	$ 115.87
342	**5775**	PIPE 8IN DI EPOXY LINED	EPOXY LINED	$ 51.52	1	$ 51.52
343	**6104**	PIPE 6" CL-51 DI EPOXY LINED (PR4-B01)	CL/51 EPOXY LINED	$ 39.27	18	$ 706.86
344		**4. SUBTOTAL**				**$ 2,122.56**
345		**5. FIRE HYDRANT & PARTS**				
346	**131**	COUPLING SAFETY STEM MUELLER 158259 - A-25 HYD PART (B02-01)	158259	$ 40.00	5	$ 200.00
347	**132**	NOZZLE LOCK 5 1/4 FIRE HYD (B02-14) 143137 A13	143137	$ 0.90	5	$ 4.50
348	**133**	PIN 3/32 X 1IN COTTER F/MUEL HYD - A29/195235 (B02-04)	A29/195235	$ 0.90	37	$ 33.30
349	**134**	PIN CLEVIS MUELLER HYD. A30 / 195234 (B02-03) 4 1/2" & 5 1/4"	195234	$ 6.43	4	$ 25.72
350	**135**	O-RING PUMPER NOZZLE A16 1988 - MULLER HYD. 5 1/4 (B02-07)	A16	$ 3.65	1	$ 3.65
351	**136**	O-RING BOTTOM SEAT MUELLER HYD. 4 1/2" A44 / 195161 (B02-06)	195161	$ 4.03	1	$ 4.03
352	**137**	O-RING BOTTOM SEAT MUELLER HYD. 5 1/4" A44 / 142893 (B02-05)	142893	$ 4.03	1	$ 4.03
353	**138**	O-RING M&H 5 1/4 1987 HYD A36 - 2-1/4 X 2-5/8 X 3/16 (B02-08)	A36	$ 4.03	2	$ 8.06
354	**139**	O-RING 4-1/2" & 5 1/4" T MUELLER HYD - A414 / 195271 (B02-09)	195271	$ 3.70	23	$ 85.10
355	**140**	O-RING HOLD DOWN NUT A3 / 194898 MUELLER 4 1/2" & 5 1/4"(B02-10)	194898	$ 3.75	24	$ 90.00
356	**141**	O-RING BONNET A5 / 142779 CENTURION, 4 1/2" & 5 1/4"(B02-16)	142779	$ 3.65	54	$ 197.10

ADDENDUM #2 - REVISED BID REPLY SPREADSHEET
E-BID #20120009

	A	B	E	G	H	I
357	**142**	WASHER ANTI-FRICTION A6 / 195546 CENTURION 4 1/2" & 5 1/4"(B02-15)	195546	$ 2.11	6	$ 12.66
358	**143**	GASKET 5-1/4 1988 MUELLER HYD A15 192345 CENTURION (S06-B44)	192345	$ 5.95	11	$ 65.45
359	**144**	HOOK S FOR HYD. 147738 (S06-B23)	147738	$ 1.44	51	$ 73.44
360	**145**	PLUG OIL BRASS A7 / 194932 4 1/2" & 5 1/4" (B02-12)	194932	$ 2.01	2	$ 4.02
361	**171**	O-RING 5 1/4 HYD HOUSING COVER B84B / 84-2-1 (B02-22)	B84B / 84-2-1	$ 3.70	1	$ 3.70
362	**172**	GASKET 5 1/4 HYD.HOUSING COVER B84B / 84-13 SEE PID# 622	B84B / 84-13	$ 7.00	1	$ 7.00
363	**332**	DIFFUSER 2 1/2 IN FOR HYDRANT - POLLARD P67501-100 (B13-A01)	P67501-100	$ 450.00	1	$ 450.00
364	**548**	OIL HYDRANT LUBE 1 GAL. - #51 (S15-A02)		$ 23.04	6	$ 138.24
365	**573**	OPERATING NUT 146430 4 1/2&5 1/4 SUPR CENTURION 1987 OR LATER (S06-B11)	146430	$ 60.00	1	$ 60.00
366	**574**	OPERATING NUT / BRASS - 4 1/2 & 5 1/4 CHATTANOOGA ST 175001 (S06-B14)	175001	$ 60.00	1	$ 60.00
367	**576**	PIN & COTTER PIN F/ROD/COUP - F/AMER/DARL HYD		$ 7.00	1	$ 7.00
368	**577**	COUPLING ROD BREAKABLE 5-1/4 - AMER DAR HYD B84B HRP-3009 (S06-B18)	B84B HRP-3009	$ 52.00	1	$ 52.00
369	**579**	OPERATING NUT 4-1/2 WEATHR CAP - CLOW EDDY 1977 (S06-B19)		$ 52.80	1	$ 52.80
370	**580**	CAP PUMPER NOZZLE - 5 1/4 MUELLER C/I (S06-B21)		$ 220.00	1	$ 220.00
371	**581**	SCREW OIL FOR HOLD DOWN NUT 4 1/2&5 1/4 STANDRD TRAFFIC 190702 (S06-B12)	190702	$ 5.00	1	$ 5.00
372	**583**	BOLT 1/2" x 3" FIRE HYDRANT - BREAK-AWAY TYPE 280049 (S06-B24)	280049	$ 7.00	24	$ 168.00
373	**584**	KIT REPAIR FOR 1989 4-1/2 M&H - HYDRANT/PART 442929 (S06-B27)	442929	$ 140.00	1	$ 140.00
374	**585**	GASKET 2-1/2IN RUBBER - HYDRANT FOR PART # 636,637,638,639 (S06-B28)		$ 7.00	11	$ 77.00
375	**586**	CHAIN & HOOK FOR 5-1/4 A-D - HYDRANT CAP		$ 12.00	1	$ 12.00
376	**587**	CAP HOSE 2-1/2" HYD AMER-DARLING 84-21 (S06-B20)	84-21	$ 77.00	1	$ 77.00
377	**621**	WEATHER SHIELD / RUBBER AMER. DARLING 84-144 5 1/4" (B02-26)	84-144	$ 7.00	1	$ 7.00
378	**622**	FIBER COVER GASKET AMER. DARLING 84-13 5 1/4" (B02-27)	84-13	$ 7.00	4	$ 28.00
379	**640**	HOLD DOWN NUT / BRASS MUELLER 107 HYD. 4", 5", 6" H-118 / 158383 (S06-B39)	158383	$ 95.00	1	$ 95.00
380	**641**	HOLD DOWN NUT 4 1/2 & 5 1/4CHATTANOOGA ST TRAFFIC (LEFT)175082 (S06-B13)	175082	$ 95.00	1	$ 95.00
381	**642**	HOSE NOZZLE 2 1/2 BRASS 4 1/2&5 1/4 CENTURION A18 STANDARD THREAD (S06-B42)	A18	$ 99.00	1	$ 99.00
382	**643**	PUMP NOZZLE 5 1/4 BRASS F/MUELLER 1988 HYD. A-14 (S06-B43)	A-14	$ 193.92	1	$ 193.92
383	**647**	ADAPTER HYD 2 1/2" X 3" SWIVEL (S06-B10)		$ 75.30	1	$ 75.30
384	**727**	HYDRANT EXTENSION 5 1/4" X 18" CLOW / MED *R1620666* (S10-D24)	R1620666	$ 321.00	1	$ 321.00
385	**740**	O-RING / SEAT 84-36-1 5 1/4" AMER. DARLING (B02-30)	84-36-1	$ 13.00	2	$ 26.00
386	**757**	VALVE / HYDRANT 84-41 5 1/4" AMER. DARLING (S06-C37)	84-41	$ 80.00	2	$ 160.00
387	**758**	O-RING / OPERATING NUT M-1/ T2400815 CLOW / MED. 5 1/4" (B02-32)	M-1/ T2400815	$ 3.70	11	$ 40.70
388	**764**	O-RING / THRUST NUT M-28 / T2400948 CLOW / MED. 5 1/4" (B02-33)	M-28 / T2400948	$ 3.70	22	$ 81.40
389	**765**	O-RING / STEM M-31 / T2401026 CLOW / MED. 5 1/4" (B02-34)	M-31 / T2401026	$ 3.70	6	$ 22.20
390	**768**	OPERATING NUT M-3 / 61CLM3 (RIGHT) CLOW / MED. 5 1/4" (S06-B09)	M-3 / 61CLM3	$ 165.00	1	$ 165.00
391	**824**	KIT SAFETY FLANGE REPAIR 4 1/2" MUELR195992 A300-00 PRE-1972 (S09-D01)	195992	$ 177.60	1	$ 177.60
392	**825**	KIT SAFETY FLANGE 5 1/4" MUELLER RTS A301 1972-LATER HRPI-301 (S09-D02)	HRPI-301	$ 120.96	2	$ 241.92
393	**826**	KIT SAFETY FLANGE REPAIR 4 1/2" 1977 CLOW-EDDY F.H. (S09-D03)		$ 133.92	1	$ 133.92
394	**827**	HYDRANT 6" EXTENSION KIT 4 1/2 CLOW MEDALLION R1620658 (S09-D05)	R1620658	$ 217.60	1	$ 217.60
395	**828**	HYDRANT 6" EXTENSION KIT 4 1/2 CLOW/EDDY 1977 HYDRANT (S09-D06)		$ 217.60	1	$ 217.60
396	**829**	HYDRANT 12" EXTENSION KIT 4 1/2" CLOW/EDDY 1977 F.HYD (S09-D08)		$ 250.00	1	$ 250.00
397	**830**	HYDRANT 6" EXTENSION KIT 4 1/2" MUELLER STD. TRAFFIC A337 (S09-D11)	A337	$ 240.00	2	$ 480.00
398	**831**	HYDRANT 6" EXTENSION KIT 5 1/4" MUELLER SUPER FIRE HYD. HRPI-375 CENTURION IMPROVED (S09-D12)	HRPI-375	$ 264.00	1	$ 264.00
399	**832**	HYDRANT 12" EXTENSION KIT 4 1/2" 61MUA319010 / MUELLER SUPER HYD. A319 HRPI-374 CENTURION IMPROVED NEW STYLE (S09-D13)	A319 HRPI-374	$ 280.00	2	$ 560.00
400	**833**	HYDRANT 12" EXTENSION KIT 5 1/4" HRPI-375 A320-010 MUELLER SUPER FIRE HYDRANT CENTURION IMPROVED NEW STYLE (S09-D15)	HRPI-375 A320-010	$ 312.00	1	$ 312.00
401	**1231**	HYDRANT EXTENSION KIT 5 1/4" X 6" WATEROUS PACER WB AMER. DARLING (S09-D16)		$ 221.33	1	$ 221.33
402	**1264**	HYDRANT EXTENSION 4 1/2" X 12" (YD-19)		$ 199.27	1	$ 199.27
403	**1265**	HYDRANT GRADELOK 6" X 24" OFFSET SWIVEL JOINT (YD-08)		$ 383.21	1	$ 383.21
404	**1266**	HYDRANT EXTENSION 5 1/4" X 12" (YD-10)		$ 199.27	1	$ 199.27
405	**1267**	HYDRANT EXTENSION 4 1/2" X 18" STD TRAFFIC A337 (YD-07)	A337	$ 250.00	1	$ 250.00
406	**1269**	OFF-SET 6 X 18 IN MJ (YD-06)		$ 158.70	1	$ 158.70
407	**1270**	HYDRANT ADAPTER 6" X 13" SWIVEL SOLID MJ (YD-13)		$ 96.50	11	$ 1,061.50
408	**1271**	ELL-SWIVEL 90 6" X 13" MJ X HYD - D/I (YD-09)		$ 150.00	1	$ 150.00
409	**1650**	O-RING BONNET CLOW 5 1/4" HYD. 442 / M32 & M-47 (S06-B30)	M32 & M-47	$ 7.80	1	$ 7.80
410	**1651**	O-RING RUBBER CLOW 5 1/4" HYD. 444 / M-53 T2401040 (S06-B29)	T2401040	$ 7.80	1	$ 7.80
411	**2169**	KIT REPAIR 4 1/2" MAIN VALVE R1620654 / CLOW MED (S09-C08)	R1620654	$ 379.20	1	$ 379.20
412	**2170**	KIT REPAIR 5 1/4" MAIN VALVE 1620655 CLOW MED. (S09-C09)	R1620655	$ 379.20	66	$ 25,027.20
413	**2496**	KIT REPAIR 5 1/4" FIRE HYD. - AMER DARLING B84B HRPI-473-584 (S09-D04)	B84B HRPI-473-584	$ 110.00	1	$ 110.00
414	**2683**	HYDRANT 12" EXTENSION KIT 5 1/4" CLOW MEDALLION HRPI-475 R1620665 (S09-D09)	R1620665	$ 282.88	4	$ 1,131.52
415	**2692**	HYDRANT 12" EXTENSION KIT 4 1/2" MUELLER SUPER A337 / 61MUA337010 STANDARD TRAFFIC IMPROVED NEW STYLE (S09-D14)		$ 250.00	5	$ 1,250.00
416	**3269**	FIRE HYD 4 1/2" MUELLER W 42 B - 604426M3A421	604426M3A421	$ 1,419.90	1	$ 1,419.90
417	**3465**	HYDRANT 12" EXTENSION KIT 4-1/2 MK73 AM DARLING 5-1/2 B84-B (S09-D07)	B84-B	$ 201.29	1	$ 201.29
418	**3521**	PIN COTTER SS 3/32" X 1" T0400980 CLOW HYD.	T0400980	$ 0.90	1	$ 0.90
419	**3522**	PIN SS 4 1/2" & 5 1/4" CLOW HYD. T0400891 (B02-11)	T0400891	$ 6.50	11	$ 71.50
420	**3523**	COUPLING MEDALN 4 1/2" & 5 1/4" (B02-13) M2202349	M2202349	$ 38.40	1	$ 38.40
421	**3692**	KIT REPAIR SAFETY FLANGE 5 1/4" CLOW MED. R1620653 (S09-C10)	R1620653	$ 120.96	2	$ 241.92

ADDENDUM #2 - REVISED BID REPLY SPREADSHEET
E-BID #20120009

	A	B	E	G	H	I
422	**3801**	MAIN VALVE RING 4 1/2" RUBBER MUELLER H-88 IMPROVED / 195800 (B02-25)	195800	$ 48.00	2	$ 96.00
423	**3921**	DRAIN VALVE FACING MUELLER H-81 IMPROVED 4 1/4", 4 1/2", 5 1/4" 192447 (S06-B46)	192447	$ 250.00	1	$ 250.00
424	**3922**	MAIN VALVE 4 1/4" RUBBER H-88 IMPROVED 190435 MUELLER HYD. (S06-B45)	190435	$ 43.00	1	$ 43.00
425	**5082**	GASKET 3 1/8" OD RUBBER HYD. HOSE CAP T0600547 (S06-B40)	T0600547	$ 3.26	49	$ 159.74
426	**5083**	GASKET 5 3/4" OD RUBBER HYD. STMR CAP T0600548 (S06-B41)	T0600548	$ 5.94	21	$ 124.74
427	**5084**	STEM UPPER 5 1/4" HYDRANT - F/1987 MUELLER 42IN		$ 110.93	1	$ 110.93
428	**5085**	STEM LOWER 5 1/4" HYDRANT - F/1987 MUELLER 42IN		$ 95.76	1	$ 95.76
429	**5128**	FIRE HYD. 5 1/4" CLOW 54" BURY 605546M3 CLMED (YD-05)	605546M3	$ 1,547.30	1	$ 1,547.30
430	**5167**	FIRE HYD 5 1/4" CLOW 48" BURY 605486M3 CLMED (YD-87)	605486M3	$ 1,512.20	6	$ 9,073.20
431	**5552**	FIRE HYD. 5 1/4" CLOW RED 30" BURY		$ 1,442.00	1	$ 1,442.00
432	**5684**	HYDRANT EXTENSION KIT 12" KENNEDY HYD - MODEL K81A 5 1/4"	K81A	$ 263.04	1	$ 263.04
433	**5779**	HYDRANT EXTENSION KIT 12" KENNEDY 81A PART 61KEK81A EXT125	61KEK81A	$ 263.04	1	$ 263.04
434	**5801**	HYDRANT EXTENSION 12" 4 1/2" X 12" MUELLER A322 NON-TRAFFIC	A322	$ 280.00	1	$ 280.00
435	**5817**	CHAIN (ONLY) FOR FIRE HYDRANT CAPS - M-44 T1600709 (S06-B22)	T1600709	$ 33.50	64	$ 2,144.00
436	**5831**	HYDRANT 6" EXTENSION 5 1/4" VO R1620664 61CLR1620664 CLOW MEDALLION HRPI-475 (S09-D10)	R1620664	$ 239.36	1	$ 239.36
437	**5915**	FIRE HYD. 5 1/4" CLOW 60" BURY		$ 1,582.40	1	$ 1,582.40
438	**5990**	O-RING STEM 4 1/2" & 5 1/4" CENTURION A12 / 194514 (B02-02)	194514	$ 3.65	31	$ 113.15
439	**6052**	FIRE HYD. 42" 5-1/4 CLOW 2546-5B (YD-03)	2546-5B	$ 1,477.10	4	$ 5,908.40
440	**6056**	OPERATING NUT 4 1/2" & 5 1/4" CENTURION 158477 (S06-B17)	158477	$ 65.00	1	$ 65.00
441	**6057**	WEATHER CAP 4 1/2 & 5 1/4 CENTURION 142818 LEFT (S06-B16)	142818	$ 26.40	1	$ 26.40
442	**6058**	HOLD DOWN NUT / CENTURION 146501 / LEFT (S06-B15)	146501	$ 54.59	1	$ 54.59
443	**6062**	WEATHER SHIELD / RUBBER AMER. DARLING 84-144 6" (B02-19)	84-144	$ 8.00	2	$ 16.00
444	**6063**	FIBER COVER GASKET AMER. DARLING 84-13 6" (B02-20)	84-13	$ 7.00	1	$ 7.00
445	**6087**	OPERATING NUT THRUST WASHER T-020-0669 (B02-17)	T-020-0669	$ 4.30	11	$ 47.30
446	**6089**	O-RING THRUST NUT M-28 T-240-0948 (B02-18)	T-240-0948	$ 3.70	17	$ 62.90
447	**6090**	O-RINGS STEM M-31 T-240-1026 (B02-23)	T-240-1026	$ 3.70	1	$ 3.70
448		**5. SUBTOTAL**		$ -		**$ 63,134.62**
449		**6. FLO-CONTROL HOT TAP SADDLES ONLY**				
450	**741**	SADDLE HOT TAP 2x1-1/2INx2IN - 3220 FLO CONTROL * 5/BX* (S05-F01)	3220 FLO CONTROL	$ 52.15	61	$ 3,181.15
451	**742**	SADDLE HOT TAP 2-1/2x1-1/2IN - 3225 FLO CONTROL *5/BX* (S05-F02)	3225 FLO CONTROL	$ 53.89	128	$ 6,897.92
452	**743**	SADDLE HOT TAP 3 x 1-1/2IN - 3230 FLO CONTROL *5 PER BX* (S05-F03)	3230 FLO CONTROL	$ 57.62	59	$ 3,399.58
453	**744**	SADDLE HOT TAP 4x1-1/2IN - 3240 FLO CONTROL *5 PER BX* (S05-F04)	3240 FLO CONTROL	$ 62.86	21	$ 1,320.06
454	**745**	SADDLE HOT TAP 6x1-1/2IN - 3260 FLO CONTROL *5 PER BX* (S05-F05)	3260 FLO CONTROL	$ 85.00	11	$ 935.00
455	**2213**	SADDLE HOT TAP 8x1-1/2-2 - FLO CTL-3280 (S0F-F08)	3280	$ 90.72	1	$ 90.72
456	**3175**	SADDLE HOT TAP 6x1-1/2-2 C-900 - 9260 FLO CONTROL (S05-F07)	9260	$ 85.53	5	$ 427.65
457	**3176**	SADDLE HOT TAP 8 x 1-1/2 C-900 - FLO CONTROL #9280	9280	$ 89.34	1	$ 89.34
458	**5027**	SADDLE HOT TAP 4 X 1 1/2IN-2 F/C-900 PIPE P/N9240 (S05-F06)	9240	$ 65.73	1	$ 65.73
459	**5888**	SADDLE WEDGE 225 - 225 WEDGE (S05-E13)	225 WEDGE	$ 50.00	1	$ 50.00
460	**5889**	SADDLE WEDGE 380 - 380 WEDGE (S05-E14)	380 WEDGE	$ 50.00	1	$ 50.00
461	**5890**	SADDLE WEDGE 480 - 480 WEDGE (S05-E15)	480 WEDGE	$ 50.00	1	$ 50.00
462		**6. SUBTOTAL**				$ 16,557.15
463		**7. GENERAL ITEMS**				
464	**61**	SPRING FOR CLOW 3" CHECK VALVE T-120-0120 (B01-D13)	T-120-0120	$ 125.00	4	$ 500.00
465	**76**	SPRING FOR CLOW 4" CHECK VALVE T-120-0086 (B01-D14)	T-120-0086	$ 125.00	12	$ 1,500.00
466	**77**	SPRING FOR CLOW 6" CHECK VALVE T-120-0038 (B01-D15)	T-120-0038	$ 135.00	2	$ 270.00
467	**326**	TEFLON 8 OZ PACKING & - MOLDING COMPOUND (B08-A01)		$ 10.00	1	$ 10.00
468	**327**	LUBRICANT PIPE JOINT 2 LB - 29APLQ (B13-E02)	29APLQ	$ 3.30	1	$ 3.30
469	**360**	CEMENT PORTLAND TYPE II SKU# 169-846 (S01-D02)	SKU# 169-846	$ 9.00	2	$ 18.00
470	**549**	METER LOCKSEAL HEAD - 93280148 ALUM. SEAL (S15-A03)	93280148	$ 3.00	3311	$ 9,933.00
471	**550**	METER LOCK STUD X-LONG 1-1/2 - 93210142 REGULAR DIA (S15-A04)	93210142	$ 3.00	3171	$ 9,513.00
472	**551**	LOCK 3/4IN JONES - J-288 (S15-A05)	J-288	$ 55.00	1	$ 55.00
473	**552**	LOCK 3/4IN FOR ANGLE VALVE (S15-A06)		$ 40.00	1	$ 40.00
474	**553**	LOCK 1IN JONES		$ 0.20	1	$ 0.20
475	**558**	GASKET WASHER 3/4 x 1/16IN - RUBBER (S06-B01)		$ 0.30	711	$ 213.30
476	**559**	GASKET WASHER 3/4 x 1/8IN - RUBBER (S06-B02)		$ 0.20	4111	$ 822.20
477	**560**	WASHER-PAPER/FIBER 3/4 X 1/16 - PAPER (S06-B03)		$ 0.20	1	$ 0.20
478	**562**	GASKET WASHER 1 x 1/16IN - RUBBER (S06-B05)		$ 0.20	1	$ 0.20
479	**563**	GASKET WASHER 1 x 1/16IN - PAPER (S06-B06)		$ 0.20	1	$ 0.20
480	**564**	GASKET WASHER 1 x 1/8IN - RUBBER (S06-B07)		$ 0.20	211	$ 42.20
481	**812**	CAP 4IN DAY PVC (S09-A09)		$ 9.00	7	$ 63.00
482	**813**	CAP 6IN DAY PVC SDR26 - TEMP PIPE PLUG #2706 (S09-A10)	2706	$ 10.00	4	$ 40.00
483	**814**	PLUG TEST PNEUMATIC 4IN - 262-048 (S09-A11)	262-048	$ 121.00	1	$ 121.00
484	**815**	PLUG TEST PNEUMATIC 6IN - 262-064 (S09-A12)	262-064	$ 143.03	1	$ 143.03
485	**816**	PLUG TEST PNEUMATIC 8IN - 262-080 (S09-A13)	262-080	$ 180.07	1	$ 180.07
486	**817**	PLUG TEST PNEUMATIC 10IN - 262-110 (S09-A14)	262-110	$ 236.90	1	$ 236.90
487	**875**	GASKET RUBBER 12.75 - F/STEEL COUPLING (S10-A31)		$ 30.00	1	$ 30.00
488	**876**	GASKET RUBBER 14.21-14.40 - F/STEEL COUPLING (S10-A30)		$ 30.00	1	$ 30.00
489	**2010**	VALVE BOX SEWER WITH COVER - 75RC7635 (S07-E07)	75RC7635	$ 149.48	1	$ 149.48
490	**2152**	PRECO PLUG 5/GAL BUCKET - 96THOROC (S13-E04)	96THOROC	$ 26.10	6	$ 156.60

	A	B	E	G	H	I
491	**2201**	GASKET 12 X 1/8 IN RED RUBBER - 12 HOLE F/F FG 12 (S11-B14)		$ 7.50	2	$ 15.00
492	**2680**	NUT OPERATING 2 SQ.IN. FOR 4IN - CLOW MJ GATE VALVE (S09-A04)		$ 65.00	1	$ 65.00
493	**3807**	VALVE BOX WATER WITH COVER P/N=7630-125 (S07-E08)	7630-125	$ 149.84	2	$ 299.68
494	**5473**	LOCK SEAL SHANK - LONG - PART #65FMLSSL	65FMLSSL	$ 20.00	1	$ 20.00
495	**5811**	CUTTER RATCHET FOR RS-1 - REED 94051 (B02-82)	94051	$ 25.00	1	$ 25.00
496	**5812**	CUTTER SPRING FOR RS1 - 40142 REED (B02-80)	40142	$ 25.00	1	$ 25.00
497	**5813**	CUTTER NUT FOR RS-1 - REED 30088 (B02-81)	30088	$ 10.00	1	$ 10.00
498	**5814**	CUTTER SPRING FOR RS2 - 40164 REED (B02-79)	40164	$ 31.10	1	$ 31.10
499	**5982**	CONCRETE MIX 80 LB BAG (SAKRETE)		$ 4.98	1	$ 4.98
500	**6018**	GREASE HYDRANT PETRO BLEND FG-2 (S09-B10)	FG-2	$ 23.00	242	$ 5,566.00
501	**6068**	MARKER WATER BALL 3M 1403XR *30 PER BX* (S09-C03)	1403XR	$ 10.00	571	$ 5,710.00
502	**6069**	MARKER SEWER BALL 3M 1404XR *30 PER BX* (S09-C07)	1404XR	$ 10.00	726	$ 7,260.00
503	**6084**	GASKET 16" X 1/8" RED RUBBER (S11-B13)		$ 11.30	1	$ 11.30
504		**7. SUBTOTAL**				**$ 43,113.94**
505		**8. LIFT STATION PARTS / US FOUNDRY OR APPROVED EQUAL**				
506	**808**	RAIN GUARD SEWER MANHOLE W/STR - 22 1/2IN OD W/STRAP (S09-A01)		$ 35.00	1	$ 35.00
507	**1262**	RISER MANHOLE 23 1/2 X 1 1/2 - FOR 1 1/4 IN LID (YD-97)		$ 280.90	1	$ 280.90
508	**1274**	MANHOLE RING AND LID - USF-465B *DON'T RE-ORDER* (YD-101)		$ 279.35	3	$ 838.05
509	**1275**	MANHOLE RING & LID 24" * CDPA60EHSSE * SANITARY SEWER (YD-102)	CDPA60EHSSE	$ 185.00	1	$ 185.00
510	**3625**	RISER MANHOLE 22-3/4ID x 1-1/2 - FOR 2IN LID (YD-96)		$ 280.90	1	$ 280.90
511	**3626**	RISER MANHOLE 22-3/4ID x 2-1/2 - FOR 2IN LID		$ 315.00	1	$ 315.00
512	**3731**	RISER MANHOLE 24 X 1 1/2 IN - FOR 1 1/4 IN LID (YD-98)		$ 280.90	1	$ 280.90
513	**5079**	RISER MANHOLE 22-3/4ID x 1IN FOR 2IN #465 LID (YD-94)		$ 207.38	2	$ 414.76
514	**5742**	RISER MANHOLE 22-3/4ID x 2IN - FOR 2IN LID (YD-95)		$ 295.00	1	$ 295.00
515		**8. SUBTOTAL**				**$ 2,925.51**
516		**9. METER BOXES & LIDS**				
517	**354**	LID ONLY SINGLE PLASTIC W/CI/R - 1419H	1419H	$ 11.80	1	$ 11.80
518	**355**	LID ONLY DOUBLE PLASTIC W/CI R - 1220H	1220H	$ 20.10	1	$ 20.10
519	**356**	LID ONLY SGL/CI W/CI READER - 36T (YD-78)	36T	$ 62.20	3	$ 186.60
520	**357**	LID ONLY /DUAL-H C.I. COVER (YD-82)		$ 32.93	3	$ 98.79
521	**420**	METER BOX JUMBO PLASTIC - W/CI READER LID (YD-02)		$ 48.80	1	$ 48.80
522	**1276**	METER BX DBL CONCRETE / NO LID (YD-86)		$ 30.49	13	$ 396.37
523	**1278**	METER BX JUMBO CONCRETE (YD-84)		$ 56.10	1	$ 56.10
524	**1280**	LID ONLY JUMBO CONCRETE - W / CONCRETE READER (YD-77)		$ 78.05	3	$ 234.15
525	**1281**	METER BOX SINGLE W/READ LID CONCRETE (YD-85)		$ 25.61	5	$ 128.05
526	**1282**	LID ONLY DOUBLE CONCRETE - DUAL H/CI W/READER (YD-81)	DUAL H	$ 32.93	27	$ 889.11
527	**1283**	LID SINGLE CONCRETE W/CI READ - 36H (YD-83)	36H	$ 25.61	4	$ 102.44
528	**3189**	LID SINGLE CONC. SOLID - 36H (YD-79)	36H	$ 17.07	1	$ 17.07
529	**5959**	LID, METER BOX WC00-1118-2C (YD-80)	WC00-1118-2C	$ 28.05	1	$ 28.05
530	**6048**	LID ONLY DOUBLE/SOLID PLASTIC/OVERLAPPING 117CW (YD-15)	117CW	$ 12.01	1576	$ 18,927.76
531	**6049**	LID ONLY SINGLE / SOLID OVERLAPPING / PLASTIC 113CW (YD-01)	113CW	$ 12.17	611	$ 7,435.87
532	**6050**	METER BOX COMPLETE/DOUBLE / SOLID OVERLAPPING LID 117B12CW-3 (YD-16)	117B12CW-3	$ 31.67	1624	$ 51,432.08
533	**6051**	METER BOX COMPLETE/SINGLE / SOLID OVERLAPPING LID 113BCW (YD-17)	113BCW	$ 15.35	546	$ 8,381.10
534		**9. SUBTOTAL**				**$ 88,394.24**
535		**10. METERS, WATER & ALL PARTS**				
536	**3**	BACKFLOW 3/4IN PREV. RPZ WILKINS 975 XL (S10-B01)	975XL	$ 122.50	32	$ 3,920.00
537	**646**	BACKFLOW 1IN PREVENTER RPZ WILKINS 975XL BRASS (S10-B02)	975XL	$ 132.50	19	$ 2,517.50
538	**650**	BACKFLOW 2IN PREVENTER RPZ - WILKINS 975XL BRASS (S10-B04)	975XL	$ 297.50	13	$ 3,867.50
539	**5408**	LOCK SEAL KEY 93280139 - 65FMLSK (PC-B03)	65FMLSK	$ 20.00	68	$ 1,360.00
540	**5608**	BACKFLOW 1-1/2IN RPZ PREVENTER - WILKINS 975XL BRASS (S10-B03)	975XL	$ 233.80	3	$ 701.40
541		**10. SUBTOTAL**				**$ 12,366.40**
542		**11. PIPE, PVC 40, C900**				
543	**1093**	PIPE 1/2IN SCH40 PVC - 20FT LENGTHS (PR1-B01)		$ 0.23	481	$ 110.63
544	**1094**	PIPE 3/4IN SCH40 PVC - 20FT SILVER LINE (PR5-D01)		$ 0.35	22511	$ 7,878.85
545	**1095**	PIPE 1IN SCH40 PVC - 20FT SILVER LINE (PR2-E01)		$ 0.50	2211	$ 1,105.50
546	**1096**	PIPE 3IN SCH40 PVC SILVER LINE (PR4-D01)		$ 1.75	6141	$ 10,746.75
547	**1097**	PIPE 2IN SCH40 PVC - 20FT SILVER LINE (PR7-D01)		$ 0.85	811	$ 689.35
548	**1098**	PIPE 1-1/4IN SCH40 PVC SILVER LINE (PR2-D01)		$ 0.70	3261	$ 2,282.70
549	**1099**	PIPE 2-1/2IN SCH40 PVC - 20FT SILVER LINE (PR7-C01)		$ 1.75	1	$ 1.75
550	**1100**	PIPE 1-1/2IN SCH40 PVC - 20FT SILVER LINE (PR5-C01)		$ 0.65	22581	$ 14,677.65
551	**1101**	PIPE 4IN SCH40 PVC SILVER LINE (PR4-E01)		$ 2.40	1541	$ 3,698.40
552	**1102**	POLY TUBING 1-1/2IN 200 PSI - 100 FT ROLL (PR7-I01)		$ 0.75	1	$ 0.75
553	**1103**	POLY TUBING 2IN 200 PSI - 100FT ROLLS (PR7-H01)		$ 1.36	175	$ 238.00
554	**1107**	POLY TUBING 1IN 200 PSI - 300FT ROLL DRISCO (YD-105)		$ 0.35	12311	$ 4,308.85
555	**1183**	PIPE 8IN X 14FT SEWER SDR26 (PR6-J01)	SDR-26	$ 5.69	9	$ 51.21
556	**1184**	PIPE 8IN DR 18-C-900 BLUE PVC (PR6-E01)	DR 18-C-900	$ 9.11	33	$ 300.63
557	**1189**	PIPE 4IN DR18 C-900 BLUE PVC (PR6-C01)	DR18 C-900	$ 2.64	51	$ 134.64
558	**1190**	PIPE 6IN DR-18 C900 BLUE PVC (PR6-D01)	DR-18 C900	$ 5.27	122	$ 642.94
559	**1191**	PIPE 4IN X 14FT SEWER SDR26 (PR6-H01)	SDR-26	$ 1.45	9	$ 13.05
560	**1192**	PIPE 6IN X 14FT SEWER SDR26 (PR6-I01)	SDR-26	$ 3.16	42	$ 132.72
561	**1402**	PIPE 6IN SCH40 PVC (PR7-B01)		$ 6.10	58	$ 353.80

	A	B	E	G	H	I
562	**1407**	PIPE 8IN SCH40 PVC - 0508040 (PR7-A01)		$ 6.50	1	$ 6.50
563	**2095**	PIPE 18IN DR18 BLUE C905 CL235 (YDP-15)	DR18	$ 43.58	1	$ 43.58
564	**2096**	PIPE 18IN DR18 GREEN C905 CL235	DR18	$ 43.58	1	$ 43.58
565	**2097**	PIPE 24IN DR18 BLUE C905 CL235 (YDP-17)	DR18	$ 77.50	1	$ 77.50
566	**2098**	PIPE 24IN DR18 [MARKED W/GREEN (YDP-14)	DR18	$ 77.50	1	$ 77.50
567	**2111**	PIPE 12IN DR18 BLUE C900 CL150 - 021218B (PR6-F01)	DR18	$ 19.32	74	$ 1,429.68
568	**2112**	PIPE 10IN DR18 BLUE C900 CL150 (PR7-F01)	DR18	$ 13.69	1	$ 13.69
569	**2113**	PIPE 16IN DR18 BLUE C905 CL235 (YDP-11)	DR18	$ 34.50	1	$ 34.50
570	**2114**	PIPE 20IN DR18 BLUE C905 CL235 (YDP-16)	DR18	$ 53.83	1	$ 53.83
571	**2115**	PIPE 10IN DR18 GREEN C900 CL150 (YDP-09)	DR18	$ 13.69	1	$ 13.69
572	**2116**	PIPE 12IN DR18 GREEN C900 CL150	DR18	$ 19.32	1	$ 19.32
573	**2117**	PIPE 16IN DR18 GREEN C905 CL235 (YDP-12)	DR18	$ 34.50	1	$ 34.50
574	**2118**	PIPE 20IN DR18 GREEN C905 CL23 (YDP-10)	DR18	$ 53.83	5	$ 269.15
575	**5770**	POLY TUBING 3/4IN 200 PSI - 100FT ROLL (S04-E04)		$ 0.25	6	$ 1.50
576	**5895**	PIPE 20IN DR25 GREEN C905 (YDP-13)	DR25	$ 53.83	1	$ 53.83
577		**11. SUBTOTAL**				**$ 49,540.52**
578		**12. PLUMBING PARTS / STREAMLINE-MUELLER OR APPROVED EQUAL**				
579	**777**	TEE 3/4 X 3/4 X 3/4 COPPER WB04031 (S12-D48)	WB04031	$ 2.10	15	$ 31.50
580	**2824**	ESCUTCHEON PLATE-WHITE PVC 3/4" HOLE/PVC PIPE *921-3W* (S12-D36)	921-3W	$ 0.25	25	$ 6.25
581	**5263**	ADAPTER 3/4IN MPT X COPPER - W1146 (S12-D38)	W1146	$ 1.80	118	$ 212.40
582	**5264**	ADAPTER REDUCER 3/4 MPT X 1/2IN C - W1130 COPPER (S12-D37)	W1130	$ 1.40	4	$ 5.60
583	**5265**	ELL 90 DEG 3/4IN COPPER CxC - C9F - W1634 (S12-D39)	W1634	$ 1.10	61	$ 67.10
584	**5267**	FLUX WATER SOLUBLE 16OZ PASTE - 30133 Oatey (S12-D46)	30133 Oatey	$ 10.90	12	$ 130.80
585	**5321**	ESCUTCHEON PLATE 3/4" CHROME - E01075 25/BX (S12-D44)	E01075	$ 0.70	1	$ 0.70
586	**5322**	ESCUTCHEON PLATE - WHITE PVC 3/4in HOLE / COPPER * 920-3W * (S12-D43)	920-3W	$ 0.20	11	$ 2.20
587	**5323**	ADAPTER 3/4IN MPT BRASS x FS - CPVC 6033 (S12-D45)	CPVC 6033	$ 10.00	3	$ 30.00
588	**5362**	CAP 3/4IN COPPER - W7009 (S12-D42)	W7009	$ 0.70	2	$ 1.40
589	**5750**	COUPLING 3/4IN COPPER CxC - CCF- WBO1034 (S12-D40)	WBO1034	$ 0.84	27	$ 22.68
590	**5751**	ELL 45 DEG 3/4IN COPPER CxC - C4F- W3034 (S12-D41)	W3034	$ 1.60	1	$ 1.60
591	**5752**	ADAPTER 3/4IN COPPER CxF - CFAF- W1246 (S12-C33)	W1246	$ 2.30	129	$ 296.70
592	**5753**	REDUCER 1x3/4IN COPPER FTGxC - BUSHING -CRCGF- W1337 (S12-C32)	W1337	$ 2.50	1	$ 2.50
593	**5754**	UNION 3/4IN COPPER CxC - CUF- W8004 (S12-C35)	W8004	$ 6.60	1	$ 6.60
594	**5755**	PIPE 3/4IN COPPER - K HARD F20(PR1-D03)	K HARD	$ 4.10	141	$ 578.10
595	**5756**	COUPLING 1IN COPPER CxC - CCG- W1047 (S12-C36)	W1047	$ 1.60	1	$ 1.60
596	**5757**	ELL 90 DEG 1IN COPPER CxC - C9G- W1647 10/BX (S12-C38)	W1647	$ 2.80	11	$ 30.80
597	**5758**	ELL 45 DEG 1IN COPPER CxC - C4G- W3044 (S12-C37)	W3044	$ 4.00	1	$ 4.00
598	**5759**	ADAPTER 1IN COPPER CxM - CMAG- W1163 (S12-C39)	W1163	$ 4.50	91	$ 409.50
599	**5760**	ADAPTER 1IN COPPER CxF - CFAG- W1263 (S12-C40)	W1263	$ 5.20	21	$ 109.20
600	**5761**	UNION 1IN COPPER CxC - CUG- W8005 10/BX (S12-C41)	W8005	$ 11.30	4	$ 45.20
601	**5762**	PIPE 1IN COPPER - K HARD G20 (PR1-D02)	K HARD	$ 5.46	81	$ 442.26
602	**5764**	ELL 90 DEG 3/4IN COPPER FTGxC - STREET W1654(S12-C34)	W1654	$ 1.70	95	$ 161.50
603	**5765**	ELL 90 DEG 1IN COPPER FTGxC - STREET- CS9G- W2344 (S12-C42)	W2344	$ 4.30	28	$ 120.40
604	**5836**	PIPE 2IN COPPER K-HARD K20 (PR1-D01)	K-HARD	$ 13.41	21	$ 281.61
605	**5837**	COUPLING 2IN CxC COPPER - CCK- W1072 (S12-C46)	W1072	$ 5.90	4	$ 23.60
606	**5838**	ADAPTER MALE 2IN COPPER CxM - W1187 (S12-C45)	W1187	$ 12.80	7	$ 89.60
607	**5839**	ADAPTER FEMALE 2IN COPPER CxF - CFAK- W1287 (S12-C43)	W1287	$ 16.10	4	$ 64.40
608	**5840**	ELL 90 DEG. 2IN COPPER CxC - C9K- W2086 (S12-C44)	W2086	$ 11.60	7	$ 81.20
609		**12. SUBTOTAL**				**$ 3,261.00**
610		**13. PVC PARTS & FITTINGS / SPEARS OR APPROVED EQUAL**				
611	**105**	VALVE 3/4IN BALL SXS SCH40 PVC - 2622-007 *SPEARS* (S16-E43)	2622-007	$ 6.12	33	$ 201.96
612	**106**	VALVE BALL 1IN SXS SCH 40 2622-010 *SPEARS* (S16-E44)	2622-010	$ 8.32	6	$ 49.92
613	**361**	ADAPTER 4IN SCH40 TO 4IN SDR26 - PVC (S06-A06)	SDR-26	$ 6.10	31	$ 189.10
614	**362**	REDUCER 6x4IN SxG SDR-26 SEWER (S06-A03)	SDR-26	$ 19.00	2	$ 38.00
615	**363**	REDUCER 8x6IN GASKET ENDS - SDR-26 (S07-A17)	SDR-26	$ 41.70	1	$ 41.70
616	**364**	SADDLE WYE 8x4IN SEWER SDR-26 - GASKET END (S07-A19)	SDR-26	$ 41.60	1	$ 41.60
617	**369**	TEE 8x8x6IN SANITARY - BELL ENDS (S07-A16)		$ 46.60	1	$ 46.60
618	**372**	WYE 6x4IN SINGLE - PVC P601-532 *SPEARS* (S07-A21)	P601-532	$ 29.70	1	$ 29.70
619	**374**	WYE SEWER 6x4x4IN DOUBLE - SDR26 (S07-A20)	SDR-26	$ 49.00	3	$ 147.00
620	**376**	WYE 8x6IN SEWER SDR-26 - GASKET END (S07-A15)	SDR-26	$ 47.80	2	$ 95.60
621	**379**	PLUG 4IN SEWER SPIGOT - PVC (S06-A05)		$ 2.60	1	$ 2.60
622	**380**	CAP 6IN SEWER GASKET END SDR26 - PVC (S07-A25)	SDR-26	$ 20.90	1	$ 20.90
623	**382**	PLUG 6IN SEWER SPIGOT - PVC (S07-A24)		$ 3.90	6	$ 23.40
624	**384**	PLUG 8IN SEWER SPIGOT - SDR-26 (S07-A23)	SDR-26	$ 13.80	1	$ 13.80
625	**385**	COUPLING 4 X 4IN SDR 26 PVC - GASKET END (S06-A07)	SDR-26	$ 9.60	5	$ 48.00
626	**387**	COUPLING 6IN PVC FOR SDR26 - GASKET END (S06-A01)	SDR-26	$ 22.10	2	$ 44.20
627	**391**	ELL 22-1/2 DEG.4IN BELL X BELL - FOR SDR-26 (S06-A09)	SDR-26	$ 13.30	1	$ 13.30
628	**392**	ELL 45 DEG.4IN BELL X BELL PVC - SDR-26 (S06-A08)	SDR-26	$ 10.10	1	$ 10.10
629	**393**	ELL 45 DEG. 4IN BELL X SPIGOT - SDR-26 PVC (S06-A11)	SDR-26	$ 9.30	1	$ 9.30
630	**394**	ELL 45 DEG 6IN BELL X BELL PVC - SDR26 (S06-A02)	SDR-26	$ 18.40	1	$ 18.40
631	**395**	ELL 45 DEG.6IN BELL X SPICKET - 27064GS SDR 26 (S06-A16)	SDR-26	$ 13.60	6	$ 81.60
632	**396**	CLEAN OUT 4 IN S-SDR 26 X THRD - SCH40 PVC *PER EA.* (S06-A12)	SDR-26	$ 2.56	5	$ 12.80
633	**397**	PLUG 3IN THRD SCH40 *FLUSH* - P110-030 CLEANOUT 50/BX *SPEARS* (S06-A13)	P110-030	$ 1.39	317	$ 440.63

	A	B	E	G	H	I
634	**398**	PLUG 4IN THRD SCH40 *FLUSH* - P110-40 25/BX *SPEARS* (S06-A14)	P110-40	$ 1.40	158	$ 221.20
635	**399**	PLUG 6IN THRD SCH 40 FLUSH - P110-060 *SPEARS* (S06-A15)	P110-060	$ 3.43	11	$ 37.73
636	**400**	ADAPTER FEMALE 6IN SCH40 PVC - 435-060 *SPEARS* (S06-A32)	435-060	$ 10.94	3	$ 32.82
637	**401**	ADAPTER MALE 6IN SCH/40 436-060 *SPEARS* S06-A31)	436-060	$ 7.40	1	$ 7.40
638	**402**	CAP 6IN SLIP SCH 40 447-060 *SPEARS* (S06-A30)	447-060	$ 7.93	2	$ 15.86
639	**403**	COUPLING 6IN SCH 40 SXS PVC 429-060 *SPEARS* (S06-A29)	429-060	$ 7.69	2	$ 15.38
640	**404**	COUPLING 6IN COMP. SCH40 - 0110-60 *SPEARS* (S06-A28)	0110-60	$ 51.90	1	$ 51.90
641	**405**	ELL 45 DEG.6IN SXS SCH 40 PVC 417-060 * SPEARS* (S06-A27)	417-060	$ 16.84	2	$ 33.68
642	**406**	ELL 90 6IN SxS SCH40 406-060 *SPEARS* (S06-A26)	406-060	$ 16.65	6	$ 99.90
643	**407**	REDUCER 6x4IN SxS SCH40 - 437-532 *SPEARS* (S06-A25)	437-532	$ 7.96	8	$ 63.68
644	**408**	TEE 6IN SLIP SCH40 - 401-060 *SPEARS* (S06-A24)	401-060	$ 25.52	1	$ 25.52
645	**410**	COUPLING 8IN SCH 40 SXS - 429-080 *SPEARS* (S06-A21)	429-080	$ 13.85	1	$ 13.85
646	**411**	ELL 45 DEG.8IN SXS SCH 40 - 417-080 *SPEARS* (S06-A20)	417-080	$ 39.54	1	$ 39.54
647	**421**	COUPLING 4IN SXS SCH40 PVC 429-040 *SPEARS* *6/BX* (S05-A01)	429-040	$ 2.40	119	$ 285.60
648	**422**	ELL 22-1/2 DEG 4IN SxS SCH40 - 416-040 *SPEARS*	416-040	$ 9.74	1	$ 9.74
649	**423**	ELL 45 DEG 4IN SxS SCH40 PVC - 417-040 *SPEARS*	417-040	$ 6.82	1	$ 6.82
650	**424**	ELL 90 4IN SxS SCH40 PVC 406-040 *SPEARS* (S05-A03)	406-040	$ 5.23	11	$ 57.53
651	**425**	PLUG 4 IN THRD SCH40 PVC *5 PER BX* (S05-A04)		$ 4.78	1	$ 4.78
652	**426**	REDUCER 4INx3IN SLIP SCH40 PVC 437-422 *SPEARS* *6/BX* (S05-A07)	437-422	$ 3.18	33	$ 104.94
653	**427**	TEE 4IN SLIP SCH40 PVC 401-040 *SPEARS* (S05-A13)	401-040	$ 7.77	2	$ 15.54
654	**428**	VALVE 4IN CHECK SxS SCH40 - S475P PVC (S05-A14)	S475P	$ 439.29	1	$ 439.29
655	**429**	WYE 4 IN SINGLE DWV PVC (S05-A15)		$ 12.90	5	$ 64.50
656	**430**	COUPLING 3IN SxS SCH40 PVC 429-030 *SPEARS* *10/BX* (S05-B01)	429-030	$ 1.65	194	$ 320.10
657	**431**	ELL 22-1/2 DEG 3IN SxS SCH40 - 416-030 *SPEARS*	416-030	$ 5.43	1	$ 5.43
658	**432**	ELL 45 DEG 3IN SxS SCH 40 PVC - 417-030 *SPEARS*	417-030	$ 3.80	1	$ 3.80
659	**433**	ELL 90 3IN S X S SCH40 PVC 406-030 * SPEARS*	406-030	$ 2.93	1	$ 2.93
660	**434**	PLUG 3IN THRD SCH40 PVC (S05-B04)		$ 2.20	1	$ 2.20
661	**436**	REDUCER 3 X 1-1/2" SxS SCH40 437-337 *SPEARS* (S05-B05)	437-337	$ 1.41	1	$ 1.41
662	**437**	REDUCER 3 X 2IN SxS SCH40 - 437-338 (S05-B06)	437-338	$ 1.41	15	$ 21.15
663	**438**	TEE 3IN SLIP SCH 40 PVC - 401-030 *SPEARS* (S05-B07)	401-030	$ 4.29	1	$ 4.29
664	**439**	VALVE 3IN CHECK SxS SCH40 - PVC (S05-B08)		$ 319.32	1	$ 319.32
665	**440**	WYE 3IN SLIP - DWV SCH 40 P600-030 NON-PRESSURE *SPEARS* (S06-A04)	P600-030	$ 3.40	1	$ 3.40
666	**441**	ADAPTER 4IN FEMALE SCH40 PVC 435-040 *SPEARS* *6/BX* (S05-A08)	435-040	$ 2.98	147	$ 438.06
667	**442**	ADAPTER 4IN MALE SCH40 PVC 436-040 *SPEARS* *5/BX* (S05-A09)	436-040	$ 2.84	58	$ 164.72
668	**443**	CAP 4IN SLIP SCH 40 PVC 6/bx- 447-040 *SPEARS* (S05-A10)	447-040	$ 3.27	25	$ 81.75
669	**444**	CAP 4IN THREADED SCH40 PVC 448-030 6/bx (S05-A11)	448-030	$ 2.05	1	$ 2.05
670	**445**	COUPLING 4IN COMPRESSION PVC SCH-40 S110-40 *SPEARS* (S05-A12)	S110-40	$ 22.79	11	$ 250.69
671	**446**	ELL 22-1/2 DEG. 2IN SxS SCH40 - 416-020 *SPEARS* (S05-C02)	416-020	$ 1.38	2	$ 2.76
672	**447**	ELL 45 DEG. 2IN SxS SCH40 PVC 25bx- 417-020 *SPEARS* (S05-C03)	417-020	$ 0.96	46	$ 44.16
673	**448**	ELL 90 2IN S X FPT SCH40 PVC (S05-C04)		$ 1.76	4	$ 7.04
674	**449**	ELL 2IN 90 ST S X MPT SCH40 PVC (S05-C05)		$ 2.20	3	$ 6.60
675	**450**	ELL 90 2IN SXS SCH40 25/bx 406-020 *SPEARS* (S05-C06)	406-020	$ 0.83	41	$ 34.03
676	**451**	ELL 2IN 90 ST FPT X MPT SCH40 PVC (S05-C07)		$ 2.50	2	$ 5.00
677	**452**	PLUG THRD 2IN SCH40 - 450-020 10/BX *SPEARS* (S05-C08)	450-020	$ 1.10	14	$ 15.40
678	**453**	TEE 2IN SLIP SCH40 401-020 *SPEARS* (S05-C09)	401-020	$ 1.01	17	$ 17.17
679	**454**	VALVE 2IN CHECK SXS SCH 40 - 1520-020 (S05-C10)	1520-020	$ 103.50	4	$ 414.00
680	**455**	COUPLING 2-1/2IN SxS SCH40 PVC 429-025 *SPEARS* *12/BX* (S05-C24)	429-025	$ 1.09	4	$ 4.36
681	**456**	COUPLING 2-1/2IN COMP SCH40 S110-25 *SPEARS* *6/BX* (S05-C20)	S110-25	$ 10.59	1	$ 10.59
682	**457**	ADAPTER 3IN FEMALE SCH40 PVC 435-030 *SPEARS* *10/BX* (S05-B10)	435-030	$ 1.84	274	$ 504.16
683	**458**	ADAPTER 3IN MALE SCH40 PVC 436-030 *SPEARS* *10/BX* (S05-B12)	436-030	$ 2.23	83	$ 185.09
684	**459**	CAP 3IN SLIP SCH40 PVC 10/bx- 447-030 *SPEARS* (S05-B13)	447-030	$ 1.44	94	$ 135.36
685	**460**	CAP 3IN THREADED SCH40 PVC - 448-030 *SPEARS* (S05-B14)	448-030	$ 1.88	4	$ 7.52
686	**461**	COUPLING 3IN COMP SCH40 PVC - S110-30 *SPEARS* *4/BX* (S05-B15)	S110-30	$ 13.85	2	$ 27.70
687	**462**	ELL 90 1-1/2IN ST SxMPT SCH40 - 410-015 *SPEARS* (S05-D01)	410-015	$ 0.86	3	$ 2.58
688	**463**	ELL 90 1-1/2IN SXS SCH40 PVC 406-015 *SPEARS* *25/BX* (S05-D02)	406-015	$ 0.56	245	$ 137.20
689	**464**	SWEEP 90 1-1/2IN SxS SCH40 - D304-015 *SPEARS* (S05-D04)	D304-015	$ 1.03	16	$ 16.48
690	**465**	ELL 90 1-1/2IN ST MPTxFPT SCH40 - 412-015 *SPEARS* (S05-D05)	412-015	$ 1.21	1	$ 1.21
691	**466**	TEE 1-1/2IN SLIP SCH40 PVC 401-015 25/bx *SPEARS* (S05-D06)	401-015	$ 0.75	45	$ 33.75
692	**467**	PLUG 1-1/2IN THRD SCH40 PVC - 450-015 *SPEARS* (S05-D07)	450-015	$ 0.79	11	$ 8.69
693	**468**	VALVE BALL 1-1/2IN SxS SCH40 2622-015 *SPEARS* *20bx* (S05-D09)	2622-015	$ 17.30	243	$ 4,203.90
694	**469**	VALVE 1-1/2IN CHECK SXS 1520C-15 *CLEAR* FLO CONTROL *12BX* (S05-D10)	1520C-15	$ 14.38	329	$ 4,731.02
695	**470**	ADAPTER FEMALE 2IN SCH40 PVC 435-020 *SPEARS* *10/BX* (S05-C11)	435-020	$ 0.57	12	$ 6.84
696	**471**	ADAPTER 2IN MALE SCH40 PVC - 436-020 *SPEARS* *25/BX* (S05-C13)	436-020	$ 0.56	76	$ 42.56
697	**472**	REDUCER MALE 2x1-1/2 SxMPT 436-251 SCH40 *SPEARS* *10/BX* (S05-C19)	436-251	$ 1.28	9	$ 11.52
698	**473**	CAP 2IN SLIP SCH40 PVC 447-020 *SPEARS* *10 PER BX* (S05-C15)	447-020	$ 0.45	28	$ 12.60
699	**474**	CAP 2IN THREADED SCH40 448-020 10/BX *SPEARS* (S05-C16)	448-020	$ 1.07	11	$ 11.77
700	**475**	COUPLING 2IN COMP SCH40 PVC - 0110-20 *SPEARS* *12/BX* (S05-C12)	0110-20	$ 5.70	15	$ 85.50
701	**476**	COUPLING 2IN SCH40 SXS PVC - 429-020 *SPEARS* *25/BX* (S05-C17)	429-020	$ 0.49	52	$ 25.48
702	**477**	ELL 45 DEG 1IN SxS SCH40 PVC 50/bx- 417-010 *SPEARS* (S05-E01)	417-010	$ 0.45	95	$ 42.75
703	**478**	ELL 90 1IN SxFPT SCH40 PVC - 407-010 *SPEARS* (S05-E02)	407-010	$ 0.39	5	$ 1.95
704	**479**	ELL 90 1IN ST SxMPT SCH40 PVC 50/bx- 410-010 *SPEARS* (S05-E03)	410-010	$ 0.63	24	$ 15.12
705	**480**	ELL 90 1IN SxS SCH40 PVC - 406-010 *SPEARS* *50 PER BX* (S05-E04)	406-010	$ 0.29	421	$ 122.09

ADDENDUM #2 - REVISED BID REPLY SPREADSHEET
E-BID #20120009

	A	B	E	G	H	I
706	**481**	ELL 90 1IN STREET MPTxFPT SCH40 412-010 PVC (S05-E05)	412-010	$ 0.91	2	$ 1.82
707	**482**	ELL 90 1IN FPTxFPT SCH40 PVC (S05-E06)		$ 1.12	2	$ 2.24
708	**483**	PLUG 1IN SLIP SCH40 PVC 449-010 *SPEARS* (S05-E07)	449-010	$ 0.45	1	$ 0.45
709	**484**	PLUG 1IN THRD SCH40 PVC - 450-010 *SPEARS* (S05-E08)	450-010	$ 0.69	1	$ 0.69
710	**485**	TEE 1IN SLIP SCH40 PVC - 401-010 *SPEARS* *50 PER BX* (S05-E09)	401-010	$ 0.41	59	$ 24.19
711	**486**	COUPLING 1-1/4IN SXS SCH40 PVC - 429-012 *SPEARS* 25BX (S05-E10)	429-012	$ 0.39	1149	$ 448.11
712	**487**	ADAPTER MALE HOSE 1-1/2IN PVC - 1436-015 25/BX *SPEARS* (S05-D08)	1436-015	$ 1.15	52	$ 59.80
713	**488**	ADAPTER 1-1/2IN FEMALE SCH40 - 435-015 *SPEARS* *25/BX* (S05-D11)	435-015	$ 0.43	35	$ 15.05
714	**489**	ADAPTER 1-1/2IN MALE SCH40 PVC 436-015 SPEARS 25/BX (S05-D12)	436-015	$ 0.43	261	$ 112.23
715	**490**	REDUCER ADAPT 1-1/4 x 1-1/2 SxMPT 436-169 *SPEARS* *25/BX* (S05-D18)	436-169	$ 0.99	82	$ 81.18
716	**491**	CAP 1-1/2IN SLIP SCH40 PVC 25/bx- 447-015 *SPEARS* (S05-D13)	447-015	$ 0.40	62	$ 24.80
717	**492**	CAP 1-1/2IN THREADED SCH40 PVC 448-015 *SPEARS* 25BX (S05-D14)	448-015	$ 0.60	113	$ 67.80
718	**493**	COUPLING 1-1/2 IN COMPRESSION S110-15 *SPEARS* *16/BX* (S05-D15)	S110-15	$ 4.33	33	$ 142.89
719	**494**	COUPLING 1-1/2IN SxS SCH40 PVC 429-015 *SPEARS* 25BX (S05-D16)	429-015	$ 0.37	1659	$ 613.83
720	**495**	CROSS 1-1/2IN SLIP SCH40 PVC - 420-015 *SPEARS* *25 PER BX* (S05-E18)	420-015	$ 1.63	83	$ 135.29
721	**496**	ELL 45 DEG 1-1/2IN SxS SCH40 417-015 *SPEARS* *25BX* (S05-E19)	417-015	$ 0.79	2245	$ 1,773.55
722	**497**	ELL 90 1-1/2IN STREET S x FPT PVC 407-015 SCH40 *SPEARS* *25/BX*(S05-D17)	407-015	$ 0.73	64	$ 46.72
723	**498**	ADAPTER FEMALE 1/2IN SCH40 PVC - 435-005 50/BX *SPEARS* (S14-D02)	435-005	$ 0.19	6	$ 1.14
724	**499**	ADAPTER MALE 1/2IN SCH40 PVC - 436-005 *SPEARS* (S14-D03)	436-005	$ 0.20	21	$ 4.20
725	**500**	COUPLING 1/2IN SxS SCH40 - 429-005 *SPEARS* (S14-D05)	429-005	$ 0.15	16	$ 2.40
726	**501**	ELL 45 DEG 1/2IN SxS SCH40 PVC - 417-005 *SPEARS* (S14-D07)	417-005	$ 0.26	6	$ 1.56
727	**502**	ELL 90 DEG 1/2IN SxFPT SCH40 - 407-005 *SPEARS* (S14-D01)	407-005	$ 0.20	7	$ 1.40
728	**503**	ELL 90 DEG.1/2IN MPTXS SCH40 - PVC 410-005 *SPEARS* (S14-D04)	410-005	$ 0.34	5	$ 1.70
729	**504**	ELL 90 DEG 1/2IN SxS SCH40 PVC - 406-005 50/BX *SPEARS* (S14-D10)	406-005	$ 0.16	13	$ 2.08
730	**505**	ADAPTER FEMALE 3/4IN SCH40 PVC - 435-007 *SPEARS* (S14-D11)	435-007	$ 0.25	71	$ 17.75
731	**506**	ADAPTER MALE 3/4IN SCH40 PVC - 436-007 *SPEARS* *50 PER BX* (S14-D12)	436-007	$ 0.20	2563	$ 512.60
732	**507**	CAP 3/4IN SLIP SCH40 PVC - 447-007 50/BX *SPEARS* (S14-D09)	447-007	$ 0.20	289	$ 57.80
733	**508**	CAP 3/4IN THREADED SCH40 PVC - 448-007 *SPEARS* (S14-D14)	448-007	$ 0.35	7	$ 2.45
734	**509**	COUPLING 3/4IN COMPRESSION PVC - S110-07 *SPEARS* (S14-D16)	S110-07	$ 2.30	16	$ 36.80
735	**510**	COUPLING 3/4IN SxS SCH40 429-007 50/BX *SPEARS* (S14-D08)	429-007	$ 0.20	829	$ 165.80
736	**511**	COUPLING 3/4IN FPTxFPT SCH40 - 430-007 *SPEARS* (S14-D13)	430-007	$ 0.37	8	$ 2.96
737	**512**	CROSS 3/4IN SLIP SCH40 PVC - 420-007 *SPEARS* (S14-D19)	420-007	$ 0.93	21	$ 19.53
738	**513**	ELL 45 DEG 3/4IN SxS SCH40 417-007 *SPEARS* *50 PER BX* (S14-D20)	417-007	$ 0.37	837	$ 309.69
739	**514**	ELL 90 3/4IN FPTxS SCH40 PVC - 407-007 *SPEARS* (S14-D17)	407-007	$ 0.25	139	$ 34.75
740	**515**	ELL 90 DEG 3/4IN FPTxMPT SCH40 412-007 50/BX *SPEARS* (S14-D18)	412-007	$ 0.56	122	$ 68.32
741	**516**	ELL 90 3/4IN STR SxMPT SCH40 - 410-007 50/BX *SPEARS* (S14-D24)	410-007	$ 0.40	251	$ 100.40
742	**517**	ELL 90 3/4IN SxS SCH40 PVC - 406-007 *SPEARS* *50 PER BX* (S14-D25)	406-007	$ 0.20	2898	$ 579.60
743	**518**	PLUG 3/4IN THRD SCH40 PVC - 450-007 *SPEARS* *PER EA.* (S14-D21)	450-007	$ 0.50	3	$ 1.50
744	**519**	TEE 3/4IN SLIP SCH 40 - 401-007 *SPEARS* (S14-D22)	401-007	$ 0.23	71	$ 16.33
745	**520**	ADAPTER 3/4x1IN - MPTxS - SCH40 436-102 50/BX *SPEARS* (S14-D29)	436-102	$ 0.40	143	$ 57.20
746	**521**	ADAPTER FEMALE 1IN SCH40 PVC - 435-010 *SPEARS* (S14-D26)	435-010	$ 0.30	21	$ 6.30
747	**522**	ADAPTER MALE 1IN SCH40 PVC - 436-010 50/BX *SPEARS* (S14-D27)	436-010	$ 0.30	199	$ 59.70
748	**523**	ADAPTER FEMALE 3/4x1IN SCH40 435-131 50/BX *SPEARS* (S14-D28)	435-131	$ 0.43	4	$ 1.72
749	**524**	CAP 1IN SLIP SCH40 PVC - 447-010 *SPEARS* *50 PER BX* (S14-D30)	447-010	$ 0.30	128	$ 38.40
750	**525**	CAP 1IN THREADED SCH40 PVC 448-010 *SPEARS* (S14-D31)	448-010	$ 0.49	3	$ 1.47
751	**526**	COUPLING COMP 1IN SCH40 PVC - S110-10 *SPEARS* (S14-D32)	S110-10	$ 2.74	1	$ 2.74
752	**527**	COUPLING 1IN SxS SCH40 PVC - 429-010 *SPEARS* *50 PER BX* (S14-D33)	429-010	$ 0.26	537	$ 139.62
753	**528**	REDUCER 2 x 1-1/2IN MPTxFPT SCH40 - 439-251 *SPEARS* (S14-D34)	439-251	$ 1.09	1	$ 1.09
754	**529**	REDUCER 2x 1-1/2IN SxF SCH40 - PVC (S14-D38)		$ 2.00	7	$ 14.00
755	**530**	REDUCER 2 x 1-1/2IN SxS SCH40 - 437-251 25/BX *SPEARS* (S14-D36)	437-251	$ 0.65	55	$ 35.75
756	**531**	REDUCER 2x1IN SxFPT SCH40 PVC (S14-D37)		$ 0.88	13	$ 11.44
757	**532**	REDUCER 2x1IN MPTxFPT SCH40 PVC - 439-249 *SPEARS* (S14-D40)	439-249	$ 1.09	6	$ 6.54
758	**533**	REDUCER 2x1IN SxS SCH40 * 437-249* (S14-D35)	437-249	$ 0.61	3	$ 1.83
759	**534**	REDUCER 2 x 3/4IN SxFPT SCH40 PVC (S14-D39)		$ 1.00	11	$ 11.00
760	**535**	REDUCER 2x 3/4IN SxS SCH40 PVC 437-248 *SPEARS* (S14-D44)	437-248	$ 0.64	11	$ 7.04
761	**536**	REDUCER 1-1/2x1-1/4 SxS - 437-212 *SPEARS* *25 PER BX* (S14-D50)	437-212	$ 0.40	729	$ 291.60
762	**537**	REDUCER 1-1/2 x 1IN MPTxFPT SCH40 - 439-211 *SPEARS* (S14-D47)	439-211	$ 1.01	23	$ 23.23
763	**538**	REDUCER 1-1/2 x 1IN SxFPT SCH40 - 438-211 25/BX *SPEARS* (S14-D53)	438-211	$ 0.65	32	$ 20.80
764	**539**	REDUCER 1-1/2 X 1IN SXS SCH40 437-211 25/bx *SPEARS* (S14-D46)	437-211	$ 0.50	25	$ 12.50
765	**540**	REDUCER 1-1/2 x 3/4IN MPTxFPT SCH40 - PVC 439-210 (S14-D45)	439-210	$ 0.99	3	$ 2.97
766	**541**	REDUCER 1-1/2 x 3/4IN SxFPT SCH40 - PVC (S14-D51)		$ 0.70	1	$ 0.70
767	**542**	REDUCER 1-1/2x 3/4IN SxS SCH40-437-210 25/bx (S14-D54)	437-210	$ 0.40	9	$ 3.60
768	**543**	REDUCER 1 x 3/4IN SxFPT SCH40 - 438-131 (S14-D43)	438-131	$ 0.39	7	$ 2.73
769	**544**	REDUCER 1x3/4IN SxS SCH40 PVC - 437-131 *SPEARS* *50 PER BX* (S14-D52)	437-131	$ 0.30	268	$ 80.40
770	**545**	REDUCER 3/4INx1/2IN SxS SCH40 437-101 *SPEARS* *50 PER BX* (S14-D49)	437-101	$ 0.20	31	$ 6.20
771	**546**	REDUCER 1/2 x 1/4IN SxFPT SCH40 - 438-072 (S14-D41)	438-072	$ 0.35	24	$ 8.40
772	**737**	VALVE BALL 4 IN SxS SCH40 2622-040 *SPEARS* (S05-A16)	2622-040	$ 116.80	1	$ 116.80
773	**1258**	CLEANOUT 2 WAY 3" SXSXS SCH40 D448-030 10/BX *LESCO ONLY* (S05-C25)	D448-030	$ 11.90	118	$ 1,404.20
774	**1259**	CLEANOUT 2 WAY 4" SXSXS SCH40 D448-040 5/BX *LESCO ONLY* (S05-F09)	D448-040	$ 14.00	87	$ 1,218.00
775	**1400**	WYE 6IN SXS SCH/40 P600-060 *SPEARS* (S06-A23)	P600-060	$ 18.39	1	$ 18.39
776	**1401**	ADAPTER MALE 8IN SCH/40 - PVC (S06-A17)		$ 35.76	1	$ 35.76
777	**1403**	WYE 3IN SxS SCH 40 PVC - 475-030 PRESSURE *SPEARS* (S05-B09)	475-030	$ 13.93	1	$ 13.93

	A	B	E	G	H	I
778	**1404**	ELL 90 8IN SXS SCH 40 - PVC 406-080 (S06-A19)	406-080	$ 41.83	1	$ 41.83
779	**1405**	ADAPTER FEMALE 8IN SCH/40 - PVC (S06-A18)		$ 21.92	1	$ 21.92
780	**1614**	TEE SANITARY 3IN SxSxS PVC - P400-030 *5 PER BX* (S04-C24)	P400-030	$ 2.68	1	$ 2.68
781	**1615**	TEE SANITARY 4IN SxSxS PVC - P400-040 *5 PER BX* (S04-C25)	P400-040	$ 4.67	1	$ 4.67
782	**1798**	COUPLING 8IN PVC FOR SDR35 - GASKET END (S07-A22)	SDR-26	$ 20.60	1	$ 20.60
783	**1843**	REDUCER 3/4x1/4IN SxFPT SCH40 PVC 438-098 *SPEARS* (S14-D42)	438-098	$ 0.35	5	$ 1.75
784	**1938**	ADAPTER HOSE 3/4IN SCH40 PVC - 1436-007 GRAY *SPEARS* (S16-E28)	1436-007	$ 0.65	11	$ 7.15
785	**1939**	ELL 90 3/4IN MxHOSE BARB SCH40 - 1413-007 *SPEARS* (S16-E29)	1413-007	$ 1.74	1	$ 1.74
786	**2004**	CROSS 2IN SLIP PVC SCH 40 - 420-020 (S05-C14)	420-020	$ 2.34	1	$ 2.34
787	**2032**	REDUCER 1 1/2 x 1-1/4 SxFPT SCH40 - 438-212 (S14-D48)	438-212	$ 0.65	2	$ 1.30
788	**2742**	CAP 1/2IN SLIP SCH40 PVC 447-005 (S14-D06)	447-005	$ 0.20	14	$ 2.80
789	**3929**	TEE 3/4X3/4X1/2IN SXSXF 402-101 (S14-D15)	402-101	$ 0.32	3	$ 0.96
790	**3930**	TEE 1x1x3/4IN SxSxFPT SCH40 402-131 (S05-E12)	402-131	$ 0.69	18	$ 12.42
791	**5268**	TEE 3/4IN SxSxFPT SCH40 50/BX *SPEARS* 402-007 (S14-D23)	402-007	$ 0.37	279	$ 103.23
792	**5569**	ELL 90 4IN BELL X SPIGOT - SDR-35 PVC (S06-A10)	SDR-26	$ 16.60	1	$ 16.60
793	**5641**	CAP 8IN SLIP PVC SCH 40 (S06-A22)		$ 20.00	1	$ 20.00
794	**5695**	VALVE 2IN BALL SxS PVC - 2622-020 *SPEARS* (S05-C18)	2622-020	$ 21.27	7	$ 148.89
795	**5793**	REDUCER 8x4 SCH40 PVC - PART #2908040RS040H	2908040RS040H	$ 27.80	1	$ 27.80
796	**5796**	ELL 45 DEG. 2-1/2IN SxS SCH40 - 417-025 (S05-C21)	417-025	$ 2.45	1	$ 2.45
797	**5797**	ELL 90 2-1/2IN SCH40 SxS (S05-C23)		$ 2.60	1	$ 2.60
798	**5798**	REDUCER 2-1/2 x 2IN SCH40 SxS - 437-292 (S05-C22)	437-292	$ 0.99	13	$ 12.87
799	**5799**	REDUCER 3 x 2-1/2IN SCH40 SxS - 437-339 (S05-B11)	437-339	$ 1.41	8	$ 11.28
800	**5909**	SWEEP 90 DEG 3 IN SxS SCH40 - D300-030 DWV (S05-B16)	D300-030	$ 1.88	26	$ 48.88
801	**5910**	SWEEP 45 DEG 3IN SxS SCH40 - P321-030 DWV *25 PER BX* (S06-F07)	P321-030	$ 1.60	336	$ 537.60
802	**5911**	SWEEP 22 1/2 DEG 3IN SxS SCH40 P324-030 DWV *20/BX* (S05-B02)	P324-030	$ 1.72	117	$ 201.24
803	**5912**	SWEEP 90 DEG 4IN SxS SCH40 10/bx- D300-040 DWV (S05-A02)	D300-040	$ 3.44	14	$ 48.16
804	**5913**	SWEEP 45 DEG 4IN SxS SCH40 - P321-040 DWV *15 PER BX* (S05-A05)	P321-040	$ 2.74	116	$ 317.84
805	**5914**	SWEEP 22 1/2 DEG 4IN SxS SCH40 - P324-040 DWV *15/BX* (S05-A06)	P324-040	$ 2.62	69	$ 180.78
806	**5924**	SADDLE HOT TAP 2-1/2X1-1/2 IN - SPEARS HT2-291 (S08-B17)	HT2-291	$ 50.00	1	$ 50.00
807	**6016**	ELL 90 DEG 1 1/4 SCH 40 SXS 406-012 25/bx *SPEARS* (S05-E11)	406-012	$ 0.49	116	$ 56.84
808	**6024**	CLEAN OUT ADAPTER 6" SDR 26 *P1406* (S07-A18)	SDR-26	$ 11.20	7	$ 78.40
809		**13. SUBTOTAL**				**$ 26,957.73**
810		**14. REPAIR CLAMPS & FERNCOS / SMITH-BLAIR, FORD OR APPROVED EQUAL**				
811	**656**	FERNCO 2 x 2IN PVC TO PVC (S07-A01)		$ 2.75	1	$ 2.75
812	**657**	FERNCO 3IN PVC TO PVC - 1056-33 (S07-A02)	1056-33	$ 3.24	22	$ 71.28
813	**658**	FERNCO CLAY TO PVC 4 x 3IN (S07-A03)		$ 4.48	3	$ 13.44
814	**659**	FERNCO 4IN PVC TO PVC - 1056-44 (S07-A04)	1056-44	$ 4.05	52	$ 210.60
815	**660**	FERNCO 4IN CLAY TO PVC - 1002-44 (S07-A05)	1002-44	$ 4.05	14	$ 56.70
816	**661**	FERNCO 4IN CLAY TO CLAY (S07-A06)		$ 4.38	3	$ 13.14
817	**662**	FERNCO 6IN PVC TO PVC - 1056-66 (S07-A07)	1056-66	$ 8.66	3	$ 25.98
818	**663**	FERNCO 6IN CLAY TO PVC - 1002-66 (S07-A08)	1002-66	$ 8.66	2	$ 17.32
819	**664**	FERNCO 6IN CLAY TO CLAY (S07-A09)		$ 9.85	1	$ 9.85
820	**665**	FERNCO 6 X 8 IN PVC TO PVC (S07-A10)		$ 16.94	1	$ 16.94
821	**667**	FERNCO 8 x 8IN PVC TO PVC (S07-A12)		$ 13.33	2	$ 26.66
822	**668**	FERNCO 8IN CLAY TO PVC (S07-A13)		$ 13.33	7	$ 93.31
823	**671**	FERNCO 10X10IN CLAY TO PVC (S07-A14)		$ 21.06	1	$ 21.06
824	**672**	DONUT 3IN RUBBER SWCI X SCH 40 - INDIANA SEAL (S08-A09)		$ 10.00	1	$ 10.00
825	**673**	DONUT 4IN RUBBER CLAY BELL X - XHC/I C/BELL#432-405 (S08-A08)	432-405	$ 10.00	1	$ 10.00
826	**674**	DONUT 4IN RUBBER CLAY BELL X - SWC/I DICKEY BELL PVW #404 (S08-A07)	404	$ 10.00	1	$ 10.00
827	**675**	DONUT 4IN RUBBER CLAY BELL X - SWC/I GRIFFEN C/BELL (S08-A06)		$ 10.00	1	$ 10.00
828	**676**	DONUT 6IN RUBBER DICKEY - CLAY BELL #608 (S08-A05)	608	$ 20.00	1	$ 20.00
829	**677**	DONUT 6IN RUBBER GRIFFIN - CLAY BELL #604-609 (S08-A04)	604-609	$ 15.00	1	$ 15.00
830	**678**	DONUT 6 IN RUBBER 6 X 4 IN - INDIANA SEAL CS604-41 (S08-A03)	CS604-41	$ 20.00	1	$ 20.00
831	**679**	DONUT 8IN RUBBER INDIANA SEAL - #C5898-85 (S08-A02)	C5898-85	$ 25.00	1	$ 25.00
832	**681**	CLAMP REPAIR H/C 3/4 X 3 IN SS - 245-00010503-0 (S07-B01)	245-00010503-000	$ 4.10	1	$ 4.10
833	**682**	CLAMP REPAIR F.CIR 3/4x 3IN SS - #244-00010503-000 12/BX (S07-B02)	244-00010503-000	$ 13.80	384	$ 5,299.20
834	**683**	CLAMP REPAIR H/C 3/4 X 6 IN SS - 245-00010506-0 (S07-B03)	245-00010506-000	$ 7.70	1	$ 7.70
835	**684**	CLAMP REPAIR F/C 3/4 X 6 IN SS - 244-00010506-000 (S07-B04)	244-00010506-000	$ 29.80	1	$ 29.80
836	**685**	CLAMP REPAIR H/C 1 X 3 IN SS - 245-00013203-0 (S07-B05)	245-00013203-000	$ 4.50	1	$ 4.50
837	**686**	CLAMP REPAIR 1x3IN SS FULL CIRCLE - 244-013203-000 SB (S07-B06)	244-013203-000	$ 15.15	5	$ 75.75
838	**687**	CLAMP REPAIR F/C 1 X 6 IN SS - 244-00013206-000 (S07-B07)	244-00013206-000	$ 30.00	1	$ 30.00
839	**688**	CLAMP REPAIR H/C 1-1/2 X 3 IN - 245-00019003-0 (S07-B08)	245-00019003-000	$ 5.00	2	$ 10.00
840	**689**	CLAMP REPAIR F/C 1-1/2 X 3 IN - 244-00019003-000 *6 PER BX* (S07-B09)	244-00019003-000	$ 15.70	3	$ 47.10
841	**690**	CLAMP REPAIR H/C 1-1/2 X 6 IN - 245-00019006-0 (S07-B10)	245-00019006-000	$ 9.30	1	$ 9.30
842	**691**	CLAMP REPAIR F.C. 1-1/2 x 6IN - 244-00019006-000 (S07-B11)	244-00019006-000	$ 31.00	1	$ 31.00
843	**692**	CLAMP REPAIR F/C 1-1/2X7-1/2IN - 1.88-1.92 (S07-B12)		$ 32.55	1	$ 32.55
844	**693**	CLAMP REPAIR H/C 2 X 3 IN SS - 245-00023803-0 (S07-B15)	245-00023803-000	$ 5.60	1	$ 5.60
845	**694**	CLAMP REPAIR 2 x 3IN SS FULLCIRCLE #244-00023803-000 *6 PER BX* (S07-B16)	244-00023803-000	$ 17.10	1	$ 17.10
846	**695**	CLAMP REPAIR 2 X 6 IN SS - 245-00023806-0 (S07-B17)	245-00023806-000	$ 10.50	1	$ 10.50
847	**696**	CLAMP REPAIR F/C 2 X 6 IN SS - 244-00023806-000 (S07-B18)	244-00023806-000	$ 31.80	1	$ 31.80
848	**697**	CLAMP REPAIR 2 X 7-1/2 IN SS - 2.35-2.63 (S07-B19)		$ 35.89	1	$ 35.89

	A	B	E	G	H	I
849	**698**	CLAMP REPAIR 2 X 12 IN SS - 245-00023812-0 (S07-B20)	245-00023812-000	$ 19.90	1	$ 19.90
850	**699**	CLAMP REPAIR F/C 2 X 12-1/2 IN - 2.35-2.63 (S07-B21)		$ 53.40	1	$ 53.40
851	**700**	CLAMP REPAIR S/B 3 X 12-1/2 IN - 226-00035012-000 (S07-B23)	226-00035012-000	$ 59.43	1	$ 59.43
852	**701**	CLAMP REPAIR 3 x 15IN S.S. - 3.46-3.70 FULL CIRCLE (S07-B24)		$ 73.01	1	$ 73.01
853	**703**	CLAMP REPAIR S/B 4X12-1/2IN SS - 4.74-5.14 (S07-C03)		$ 67.78	1	$ 67.78
854	**704**	CLAMP REPAIR S/B 4 X 15 IN SS - 4.95-5.35 (S07-C04)		$ 150.00	1	$ 150.00
855	**705**	CLAMP REPAIR S/B 4x15IN SS - 4.45-4.73 (S07-C05)		$ 74.83	4	$ 299.32
856	**706**	CLAMP REPAIR S/B 4x15IN SS - O.D.RANGE 4.74-5.14 (S07-C06)		$ 79.12	1	$ 79.12
857	**707**	CLAMP REPAIR S/B 6 X 7-1/2 IN - 6.56-6.96 (S07-C07)		$ 49.87	1	$ 49.87
858	**709**	CLAMP REPAIR 6 X 15IN SINGLE BAND - 6.84-7.24 FORD SS (S07-C10)		$ 96.74	4	$ 386.96
859	**710**	CLAMP REPAIR 6x15IN 7.05-7.45 #226-071015-000 (S07-C11)	226-071015-000	$ 93.80	1	$ 93.80
860	**711**	SLEEVE 6X6X6 TAPPING (S07-C12)		$ 477.54	1	$ 477.54
861	**712**	SLEEVE 8X6X8 TAPPING 8.63-9.05 - FORD FAST-905X6 (S07-C13)	905X6	$ 482.62	1	$ 482.62
862	**713**	CLAMP REPAIR D/B 8 X 10 IN SS - 8.99-9.39 (S07-C14)		$ 98.50	1	$ 98.50
863	**714**	CLAMP REPAIR S/B 8 X 15 IN SS - 8.54-8.94 (S07-C15)		$ 109.51	1	$ 109.51
864	**715**	CLAMP REPAIR 8x15IN 8.99-9.39 - #226-090515-000 (S07-C16)	226-090515-000	$ 109.51	1	$ 109.51
865	**717**	CLAMP REPAIR S/B 8 X 15 IN SS - FORD F1-967X15 (S07-C17)	967X15	$ 112.13	1	$ 112.13
866	**718**	CLAMP REPAIR S/B SS 10 X 15 9.70-10.10 (S07-D01)		$ 112.13	1	$ 112.13
867	**719**	CLAMP REPAIR D/B 10 X 15 IN SS - 10.70-11.50 D/B (S07-D02)		$ 191.80	1	$ 191.80
868	**720**	CLAMP REPAIR S/B 10 X 16 IN SS - 11.04-11.44 S/B (S07-D03)		$ 141.35	1	$ 141.35
869	**721**	CLAMP REPAIR D/B 10" X 15 " SS - 11.60-12.40 (S07-D04)		$ 191.80	1	$ 191.80
870	**722**	CLAMP REPAIR S/B 12 X 12-1/2IN - 14.00-14.40 S/B (S07-D05)		$ 137.30	1	$ 137.30
871	**723**	CLAMP REPAIR D/B 12 X 15 IN SS - 12.70-13.50 D/B (S07-D06)		$ 209.65	1	$ 209.65
872	**724**	CLAMP REPAIR S/B 12 X 15 13.10-13.50 226-00132015000 (S07-D07)	226-00132015000	$ 160.97	1	$ 160.97
873	**725**	CLAMP REPAIR D/B 12 X 15 IN SS - 13.65-14.45 D/B (S07-D08)		$ 209.65	1	$ 209.65
874	**726**	CLAMP REPAIR S/B 12 X 15 IN SS - 14.00-14.40 S/B (S07-D09)		$ 165.11	1	$ 165.11
875	**728**	CLAMP REPAIR D/B 16 X 15 IN SS - 17.15-17.90 (S07-D10)		$ 313.95	1	$ 313.95
876	**729**	CLAMP REPAIR D/B 16 X 15 IN SS - 18.46-19.21 (S07-D11)		$ 330.79	1	$ 330.79
877	**730**	CLAMP REPAIR D/B 16 X 20IN SS - 17.15-17.90 (S07-D12)		$ 425.04	1	$ 425.04
878	**731**	CLAMP REPAIR D/B 18 X 15IN SS - 18.46-19.21 (S07-E01)		$ 330.79	1	$ 330.79
879	**732**	CLAMP REPAIR D/B 18 X 15IN SS 19.23-19.98 228-20192315-000 (S07-E03)	228-20192315-000	$ 330.90	1	$ 330.90
880	**733**	CLAMP REPAIR D/B 20 X 30IN SS - 21.52-22.27 (S07-E04)		$ 717.85	1	$ 717.85
881	**789**	COUPLING 4 FLG ADAP.4.74-4.90 - 912-00048004-000 (S08-D07)	912-00048004-000	$ 87.71	1	$ 87.71
882	**799**	COUPLING 10IN QUANTUM - 10.64-11.97 461-10641197 (S08-D16)	461-10641197	$ 105.00	1	$ 105.00
883	**801**	COUPLING 10IN D/I 11.55-12.12 - D/I (S08-E02)		$ 105.00	1	$ 105.00
884	**805**	COUPLING 12IN D/I 13.92-14.26 - D/I (S08-E05)		$ 130.00	1	$ 130.00
885	**838**	CLAMP 4IN BELL JOINT LEAK-4.80 - 274-00000480-000 (S09-E01)	274-00000480-000	$ 60.39	1	$ 60.39
886	**839**	CLAMP 6IN BELL JOINT LEAK-6.90 - 274-00000690-000 (S09-E02)	274-00000690-000	$ 66.50	1	$ 66.50
887	**840**	CLAMP 8IN BELL JOINT LEAK - 9.05-9.30 (S09-E03)		$ 92.00	1	$ 92.00
888	**841**	CLAMP 10IN BELL JOINT LEAK - 11.10-11.40 (S09-E04)		$ 115.33	1	$ 115.33
889	**842**	CLAMP 12IN BELL JOINT LEAK - 13.20-13.50 (S09-E05)		$ 125.11	1	$ 125.11
890	**843**	CLAMP 16IN BELL JOINT LEAK - 17.40-17.80 (S09-E07)		$ 277.93	1	$ 277.93
891	**844**	CLAMP 18IN BELL JOINT LEAK - 19.50-19.92 (S09-E08)		$ 386.21	1	$ 386.21
892	**1461**	COUPLING 8IN MAXI-FIT - 8.59-9.25 (S08-D15)		$ 250.00	1	$ 250.00
893	**3541**	CLAMP REPAIR F/C 1-1/2X 12-1/2 - 1.88-1.92 (S07-B13)		$ 62.00	1	$ 62.00
894	**3542**	CLAMP REPAIR F/C 1-1/2 X 15 IN - 1.88-1.92 n/l/a (S07-B14)		$ 75.00	1	$ 75.00
895	**3543**	CLAMP REPAIR F/C 2 X 15 IN SS - 2.35-2.63 (S07-B22)		$ 67.00	1	$ 67.00
896	**4116**	COUPLING 6IN QUANTUM 6.54-7.65 PART #46106300740 (S08-D10)	46106300740	$ 104.52	4	$ 418.08
897	**5023**	COUPLING 8IN QUANTUM 8.54-9.85 PN #461-08540960-000 (S08-D14)	461-08540960-000	$ 119.12	1	$ 119.12
898	**5045**	COUPLING 4IN QUANTUM 4.46-5.60 PN=461-04290535-000 (S08-D08)	461-04290535-000	$ 81.00	11	$ 891.00
899	**5139**	CLAMP REPAIR S/B 6.56-6.96 226-066307-000 SM/BL (S07-C08)	226-066307-000	$ 51.09	1	$ 51.09
900	**5517**	COUPLING 12IN QUAN 12.75-14.40 - 461-1275144 0000 (S08-E03)	461-1275144 0000	$ 232.40	1	$ 232.40
901	**5606**	CLAMP REPAIR D/B 16 X 15 IN SS - 263-171515-000 (S07-E02)	263-171515-000	$ 313.95	1	$ 313.95
902	**5769**	CLAMP REPAIR 6x15IN SINGLE BAND - 6.56-6.96 226-066315-000 (S07-C09)	226-066315-000	$ 87.93	1	$ 87.93
903	**5833**	COUPLING 16IN REPAIR HYMAX		$ 1,015.60	1	$ 1,015.60
904	**5907**	COUPLING 16 IN MAXI-FIT - 74MFC1728 (S09-E09)	74MFC1728	$ 1,015.60	1	$ 1,015.60
905	**5940**	CLAMP 20" BELL JOINT LEAK CLAMP SMITH BLAIR # 274-2160-000 (S07-E05)	274-2160-000	$ 448.50	1	$ 448.50
906	**5941**	CLAMP 24" BELL JOINT LEAK CLAMP SMITH BLAIR# 274-2580-000 (S07-E06)	274-2580-000	$ 510.79	1	$ 510.79
907	**5942**	CLAMP 3/4" X 3" FULL CIRCLE 244-008803-000 *16 PER BX* (S07-C01)	244-008803-000	$ 13.95	25	$ 348.75
908	**5943**	CLAMP 3/4"X 6" FULL CIRCLE 244-008806-001 (S07-C02)	244-008806-001	$ 29.67	1	$ 29.67
909	**5962**	GASKET FOR 12" COUPLING #33820 BLUE (S11-C13)		$ 20.00	1	$ 20.00
910	**5976**	COUPLING HYMAX 6IN 6.42-7.68 (S08-D11)		$ 220.00	2	$ 440.00
911	**6094**	COUPLING 4" 4.22-5.60 #242-0550 (S08-D09)	242-0550	$ 224.00	4	$ 896.00
912	**6095**	COUPLING 6" 6.28-7.80 #242-0760 (S08-D12)	242-0760	$ 289.00	2	$ 578.00
913	**6096**	COUPLING 8" 8.40-9.75 #242-0960 (S08-D13)	242-0960	$ 334.00	2	$ 668.00
914	**6097**	COUPLING 10" 10.50-12.12 #242-1200 (S08-D17)	242-1200	$ 430.00	1	$ 430.00
915	**6098**	COUPLING 12" 12.50-14.38 #242-1430 (S08-E04)	242-1430	$ 526.00	1	$ 526.00
916	**6099**	COUPLING 16" 17.32-19.20 #242-1920 (S08-E06)	242-1920	$ 1,075.00	1	$ 1,075.00
917		**14. SUBTOTAL**				**$ 25,193.06**
918		**15. SCH 80 PIPE & ALL FITTINGS / SPEARS OR APPROVED EQUAL**				
919	**557**	COUPLING 6" SxS SCH80 PVC - 829-060 *SPEARS* (S17-A03)	829-060	$ 20.72	8	$ 165.76
920	**669**	REDUCER 1 1/4" X 1" SCH80 837-168 *25 BX* (S16-D22)	837-168	$ 1.40	4	$ 5.60

ADDENDUM #2 - REVISED BID REPLY SPREADSHEET
E-BID #20120009

	A	B	E	G	H	I
921	**1026**	REDUCER BUSHING 1 X 1/4" MXF SCH80 839-128 25/bx *SPEARS* (S16-E37)	839-128	$ 2.68	1	$ 2.68
922	**1028**	REDUCER BUSHING 1 X 1 1/4" MXF SCH80 839-168 25/bx *SPEARS* (S16-E38)	839-168	$ 2.28	1	$ 2.28
923	**1053**	NIPPLE 1-1/2 x 8IN TBE SCH80 - 886-080 *SPEARS* EA 25/BOX (S16-D01)	886-080	$ 2.46	35	$ 86.10
924	**1059**	NIPPLE 3/4 X CL TBE SCH80 PVC - PART #207-016 (S16-E33)	207-016	$ 0.25	1	$ 0.25
925	**1060**	NIPPLE 3/4 X 2IN TBE SCH80 PVC - PART #207-020 (S16-E34)	207-020	$ 0.25	2	$ 0.50
926	**1061**	NIPPLE 3/4 X 3IN TBE SCH80 PVC - PART #207-030 (S16-E32)	207-030	$ 0.51	1	$ 0.51
927	**1062**	NIPPLE 3/4 X 4IN TBE SCH80 PVC - PART #207-040 (S16-E31)	207-040	$ 0.66	1	$ 0.66
928	**1063**	NIPPLE 3/4 X 6IN TBE SCH80 PVC - PART #207-060 (S16-E30)	207-060	$ 0.96	1	$ 0.96
929	**1064**	NIPPLE 1IN X CL SCH80 PVC 884-005 *SPEARS* (S16-E05)	884-005	$ 0.66	15	$ 9.90
930	**1065**	NIPPLE 1IN X 2IN TBE SCH80 PVC - PART #210-020 (S16-D15)	210-020	$ 0.74	1	$ 0.74
931	**1066**	NIPPLE 1IN X 3IN TBE SCH80 PVC - PART #210-030 (S16-E03)	210-030	$ 0.84	3	$ 2.52
932	**1067**	NIPPLE 1IN X 4IN TBE SCH80 PVC - PART #210-040 (S16-D18)	210-040	$ 0.96	1	$ 0.96
933	**1068**	COUPLING 1IN SCH80 PVC GRAY - HOSE BARBxHOSE BARB (S16-E02)		$ 5.00	1	$ 5.00
934	**1069**	NIPPLE 1-1/4 IN X CL TBE SCH80 - 885-005 *SPEARS* (S16-D09)	885-005	$ 0.96	1	$ 0.96
935	**1070**	NIPPLE 1-1/4 X 2IN TBE SCH80 - PART #212-020 (S16-D10)	212-020	$ 0.99	1	$ 0.99
936	**1071**	NIPPLE 1-1/4 X 3IN TBE SCH80 - 212-030 (S16-D11)	212-030	$ 1.13	2	$ 2.26
937	**1072**	NIPPLE 1-1/2 X 2IN TBE SCH80 - PART #215-020 (S16-C17)	215-020	$ 1.50	1	$ 1.50
938	**1073**	NIPPLE 1-1/2 X 3IN TBE SCH80 - PART #215-030 (S16-D02)	215-030	$ 1.35	3	$ 4.05
939	**1074**	NIPPLE 1-1/2 X 4IN TBE SCH80 886-040 *SPEARS* (S16-C08)	886-040	$ 1.47	1	$ 1.47
940	**1075**	NIPPLE 2IN X CL TBE SCH80 PVC - PART #220-016 (S16-C05)	220-016	$ 1.39	1	$ 1.39
941	**1076**	NIPPLE 2IN X 3IN TBE SCH80 PVC 887-030 (S16-C02)	887-030	$ 1.66	4	$ 6.64
942	**1077**	NIPPLE 2IN X 4IN TBE SCH80 PVC - 887-040 *SPEARS* (S16-C03)	887-040	$ 1.93	1	$ 1.93
943	**1078**	NIPPLE 3IN X CL TBE SCH80 PVC - 889-005 (S16-A08)	889-005	$ 5.88	7	$ 41.16
944	**1079**	NIPPLE 4IN X CL TBE SCH80 PVC - 890-005 (S17-A08)	890-005	$ 9.60	1	$ 9.60
945	**1080**	ELL 90 1-1/2IN SLIP SCH80 PVC - 806-015 10/BX *SPEARS* (S16-C09)	806-015	$ 1.80	36	$ 64.80
946	**1081**	COUPLING 1-1/2IN SxS SCH80 PVC 10/BX 829-015 *SPEARS* (S16-C13)	829-015	$ 5.54	17	$ 94.18
947	**1082**	COUPLING 1-1/2IN FPTxFPT SCH80 - PVC #830-015 *SPEARS* (S16-C10)	830-015	$ 5.23	1	$ 5.23
948	**1083**	TEE 1-1/2IN SLIP SCH80 PVC - 801-015 *SPEARS* (S16-C15)	801-015	$ 6.22	12	$ 74.64
949	**1084**	UNION 2IN SCH80 PVC FPTxFPT 858-020 5/BX *SPEARS* (S16-B14)	858-020	$ 17.84	2	$ 35.68
950	**1085**	ELL 90 2-1/2IN SxS SCH80 PVC - PART #806-025 *SPEARS* (S16-B07)	806-025	$ 5.11	1	$ 5.11
951	**1086**	FLANGE 1-1/2IN SLIP FF SCH80 - 854-015 4-HOLE *SPEARS* (S16-C12)	854-015	$ 4.20	12	$ 50.40
952	**1087**	FLANGE 2IN SLIP FF SCH80 - 854-020 PVC 4-HOLE 10/BX *SPEARS* (S16-C01)	854-020	$ 5.59	15	$ 83.85
953	**1088**	FLANGE 3 IN SWIVEL SLIP SCH80 - 854-030 4 HOLE GRAY *SPEARS* (S16-A06)	854-030	$ 9.54	1	$ 9.54
954	**1089**	FLANGE 2-1/2IN SLIP FF SCH80 PVC 854-025 *SPEARS* (S16-B05)	854-025	$ 8.63	1	$ 8.63
955	**1091**	FLANGE 4IN SWIVEL SLIP SCH80 - 854-040 8 HOLE GRAY *SPEARS* (S17-A06)	854-040	$ 12.06	31	$ 373.86
956	**1092**	FLANGE 6IN SWIVEL SLIP SCH80 5/bx- 854-060 8-HOLE *SPEARS* (S17-A02)	854-060	$ 18.98	71	$ 1,347.58
957	**1150**	TEE 1" FIPT X FIPT SCH80 805-010 15/bx *SPEARS* (S16-E39)	805-010	$ 4.90	13	$ 63.70
958	**1151**	UNION 1" THREADED FIPT W/VITON SEALS SCH80 8058-010 15/bx *SPEARS* (S16-E40)	8058-010	$ 4.35	3	$ 13.05
959	**1156**	ADAPTER 1" M X HOSE BARB SCH80 1436-010 25/bx *SPEARS* (S16-E41)	1436-010	$ 0.70	27	$ 18.90
960	**1393**	ADAPTER MALE 1-1/4IN SCH80 PVC 10/bx- 836-012 *SPEARS* (S16-D07)	836-012	$ 3.68	434	$ 1,597.12
961	**1394**	ELL 45 DEG. 2-1/2IN SxS SCH80 - PVC 817-025 GRAY *SPEARS* (S16-B06)	817-025	$ 10.83	1	$ 10.83
962	**1395**	PIPE 2IN SCH80 PVC GRAY - 20FT LENGTHS (PR1-C01)		$ 1.35	121	$ 163.35
963	**1396**	PIPE 2-1/2IN SCH80 PVC GRAY - 20FT LENGTHS (PR1-I02)		$ 0.98	1	$ 0.98
964	**1408**	COUPLING 2IN SXS SCH80 PVC - 829-020 20/BX *SPEARS* (S16-B13)	829-020	$ 2.72	57	$ 155.04
965	**1409**	COUPLING 2-1/2IN SXS SCH80 PVC - 829-025 10/bx *SPEARS* (S16-B03)	829-025	$ 6.70	1	$ 6.70
966	**1410**	ELL 90 2IN SCH80 SxS PVC GRAY 25/bx- 806-020 *SPEARS* (S16-B09)	806-020	$ 2.18	64	$ 139.52
967	**1411**	ELL 45 DEG. 2IN SxS SCH80 PVC - 817-020 10/BX *SPEARS* (S16-B11)	817-020	$ 5.16	23	$ 118.68
968	**1412**	ADAPTER MALE 2IN MPTxS SCH80 - 836-020 10/bx *SPEARS* (S16-B16)	836-020	$ 6.01	79	$ 474.79
969	**1413**	ADAPTER MALE 2-1/2IN SCH80 PVC - 836-025 5/BX *SPEARS* (S16-B02)	836-025	$ 6.83	12	$ 81.96
970	**1414**	ADAPTER FEMALE 2IN SCH80 PVC - 835-020 10/bx *SPEARS* (S16-B12)	835-020	$ 7.88	36	$ 283.68
971	**1415**	ADAPTER FEMALE 2-1/2IN SCH80 - 835-025 5/BX *SPEARS* (S16-B01)	835-025	$ 12.44	6	$ 74.64
972	**1416**	WYE 2IN SxS SCH80 PVC - 875-020 *SPEARS* (S16-B08)	875-020	$ 18.77	1	$ 18.77
973	**1558**	ELL 90 6IN SXS SCH80 PVC - 806-060 *SPEARS* (S17-A01)	806-060	$ 24.00	11	$ 264.00
974	**1763**	COUPLING 4IN SxS SCH80 PVC - 829-040 *SPEARS* (S17-A07)	829-040	$ 9.62	6	$ 57.72
975	**1764**	ELL 90 4IN SxS SCH80 PVC - 806-040 *SPEARS* (S17-A05)	806-040	$ 8.74	15	$ 131.10
976	**1827**	COUPLING 2IN FPT X FPT SCH80 PVC 830-020 10/BX *SPEARS* (S16-B18)	830-020	$ 5.49	1	$ 5.49
977	**1970**	PLUG 1IN THRD SCH80 PVC - 850-010 *SPEARS* (S16-D17)	850-010	$ 1.33	1	$ 1.33
978	**2260**	REDUCER 1 X 1/2IN SxS SCH80-837-130 50/bx *SPEARS* (S16-E08)	837-130	$ 1.02	36	$ 36.72
979	**2275**	TEE 1/2IN SLIP SCH80 PVC - 801-005 25/bx *SPEARS* (S16-E25)	801-005	$ 1.73	16	$ 27.68
980	**2276**	TEE 3/4IN SLIP SCH80 PVC - 801-007 *SPEARS* (S16-E06)	801-007	$ 1.82	21	$ 38.22
981	**2277**	TEE 1IN SLIP SCH80 PVC - 801-010 15/bx *SPEARS* (S16-E01)	801-010	$ 2.27	2	$ 4.54
982	**2278**	ELL 90 DEG.1/2IN SxS SCH80 PVC 20/BX 806-005 *SPEARS* (S16-E20)	806-005	$ 0.61	34	$ 20.74
983	**2280**	ELL 90 1IN SxS SCH80 PVC - 806-010 25/BX *SPEARS* (S16-D16)	806-010	$ 1.26	31	$ 39.06
984	**2281**	TEE 1-1/4IN SxS SCH80 PVC - 801-012 10/bx *SPEARS* (S16-D06)	801-012	$ 6.22	44	$ 273.68
985	**2282**	ELL 45 DEG.1/2IN SxS SCH80 PVC - 817-005 *SPEARS* (S16-E27)	817-005	$ 1.16	22	$ 25.52
986	**2283**	ELL 45 DEG.3/4IN SxS SCH80 PVC - 817-007 *SPEARS* (S16-E12)	817-007	$ 1.77	8	$ 14.16
987	**2284**	ELL 45 DEG. 1IN SxS SCH80 PVC - 817-010 *SPEARS* (S16-D20)	817-010	$ 2.65	9	$ 23.85
988	**2285**	COUPLING 1/2IN SxS SCH80 PVC - 829-005 *SPEARS* (S16-E15)	829-005	$ 1.11	19	$ 21.09
989	**2286**	COUPLING 3/4IN SxS SCH80 PVC - 829-007 *SPEARS* (S16-E24)	829-007	$ 1.50	11	$ 16.50
990	**2287**	COUPLING 1IN SxS SCH-80 PVC - 829-010 25/BX *SPEARS* (S16-D21)	829-010	$ 1.54	24	$ 36.96
991	**2288**	ADAPTER FEMALE 1/2IN SCH80 PVC - 835-005 *SPEARS* (S16-E19)	835-005	$ 1.10	15	$ 16.50
992	**2289**	ADAPTER FEMALE 3/4IN SCH80 PVC - 835-007 25/bx *SPEARS* (S16-E11)	835-007	$ 1.51	14	$ 21.14

	A	B	E	G	H	I
993	**2290**	ADAPTER FEMALE 1IN SCH80 PVC - 835-010 *SPEARS* (S16-D19)	835-010	$ 2.27	14	$ 31.78
994	**2291**	ADAPTER FEMALE 1-1/2IN SCH80 - 835-015 *SPEARS* (S16-D03)	835-015	$ 4.51	11	$ 49.61
995	**2292**	ADAPTER MALE 1/2IN SCH80 PVC - 836-005 *SPEARS* (S16-E18)	836-005	$ 1.29	36	$ 46.44
996	**2293**	ADAPTER MALE 3/4IN SCH80 PVC - 836-007 *SPEARS* (S16-E10)	836-007	$ 1.43	24	$ 34.32
997	**2294**	ADAPTER MALE 1IN SCH80 PVC - 836-010 20/BX *SPEARS* (S16-E04)	836-010	$ 2.48	86	$ 213.28
998	**2295**	ADAPTER MALE 1-1/2IN SCH80 PVC - 836-015 10/BX *SPEARS* (S16-D04)	836-015	$ 4.16	958	$ 3,985.28
999	**2296**	REDUCER 3/4 x 1/2IN SCH80 PVC- 837-101 50/bx *SPEARS* (S16-E14)	837-101	$ 0.35	15	$ 5.25
1000	**2297**	REDUCER 1x3/4IN SxS SCH80 PVC 50/BX 837-131 *SPEARS* (S16-E09)	837-131	$ 1.02	31	$ 31.62
1001	**2298**	REDUCER 1-1/2x3/4IN SxS SCH80 - 837-210 *SPEARS* (S16-E26)	837-210	$ 2.18	12	$ 26.16
1002	**2299**	REDUCER 2x 3/4IN SxS SCH80 PVC - 837-248 *SPEARS* (S16-C06)	837-248	$ 3.12	2	$ 6.24
1003	**2300**	REDUCER 2 X 1IN SxS SCH80 PVC - 837-249 *SPEARS* (S16-E22)	837-249	$ 3.12	8	$ 24.96
1004	**2301**	REDUCER 2 X 1-1/2IN SxS SCH80 - 837-251 10/BX *SPEARS* (S16-E23)	837-251	$ 3.12	64	$ 199.68
1005	**2340**	TEE 2IN SLIP SCH80 PVC - 801-020 *SPEARS* (S16-B10)	801-020	$ 7.78	13	$ 101.14
1006	**2341**	UNION 1-1/2IN SxS SCH80 PVC - 8057-015 10/BX *SPEARS* (S16-C14)	8057-015	$ 7.41	62	$ 459.42
1007	**2444**	UNION 1IN SxS SCH80 PVC - 8057-010 (S16-D14)	8057-010	$ 3.29	23	$ 75.67
1008	**2463**	UNION 1/2IN SxS SCH 80 8057-005 20/BX (S16-E36)	8057-005	$ 2.27	6	$ 13.62
1009	**2464**	UNION 3/4IN SxS SCH80 PVC - 34P8U 8057-007 (S16-E35)	8057-007	$ 2.89	11	$ 31.79
1010	**2466**	UNION 2IN SxS SCH80 PVC 2P8U 857-020 5/BX *SPEARS* (S16-C04)	857-020	$ 8.70	24	$ 208.80
1011	**2545**	ELL 90 3/4IN SCH80 PVC GRAY-806-007 20/bx *SPEARS* (S16-E07)	806-007	$ 0.78	23	$ 17.94
1012	**2546**	ELL 45 DEG 1-1/2IN SxS SCH80 - 817-015 *SPEARS* (S16-C16)	817-015	$ 3.98	15	$ 59.70
1013	**2588**	COUPLING 1-1/4IN SxS SCH80 PVC - 829-012 10/BX *SPEARS* (S16-D08)	829-012	$ 2.35	111	$ 260.85
1014	**2846**	ADAPTER FEMALE 1-1/4IN SCH80 835-012 10/BX (S16-D12)	835-012	$ 3.68	7	$ 25.76
1015	**3043**	PIPE 3/4IN SCH80 PVC - 20FT LENGTHS GRAY (PR1-E01)		$ 0.50	141	$ 70.50
1016	**3044**	PIPE 1IN SCH80 PVC - GRAY 20FT LENGTHS (PR1-F02)		$ 0.75	91	$ 68.25
1017	**3202**	PIPE 1-1/2IN SCH80 PVC (PR1-G01)		$ 1.15	342	$ 393.30
1018	**3210**	ELL 90 1-1/2IN SxF SCH80 PVC - 807-015 *SPEARS* (S16-C11)	807-015	$ 4.22	2	$ 8.44
1019	**3211**	ELL 90 2IN SxF SCH80 PVC - 807-020 *SPEARS* (S16-B15)	807-020	$ 5.46	1	$ 5.46
1020	**3471**	PIPE 1-1/4IN SCH80 PVC GRAY - 20FT LENGTHS (PR1-F01)		$ 1.00	479	$ 479.00
1021	**3802**	CROSS 1-1/2IN SLIP SCH80 PVC PART #820-015 (S16-C07)	820-015	$ 13.57	1	$ 13.57
1022	**5018**	NIPPLE 2 1/2 X CL TBE SCH80 PVC (S16-B04)		$ 2.50	1	$ 2.50
1023	**5155**	PIPE 1IN CPVC SCH80 20FT LNG - PART #3670-010 (PR1-H02)		$ 1.90	5	$ 9.50
1024	**5156**	PIPE 3/4IN CPVC SCH80 20FT LNG - 3670-007 (PR1-H03)		$ 1.20	11	$ 13.20
1025	**5176**	ELL 90 1-1/4IN SCH80 PVC SxS - #806-012 10/bx *SPEARS* (S16-D05)	806-012	$ 1.73	145	$ 250.85
1026	**5177**	ELL 45 DEG.1-1/4IN SXS SCH80 - PVC PART #817-012 *SPEARS* (S16-D13)	817-012	$ 3.37	1	$ 3.37
1027	**5196**	PIPE 4IN SCH80 PVC 20FT LENGTH (PR2-C01)		$ 4.70	121	$ 568.70
1028	**5225**	ELL 3IN 90 SCH80 SxS PVC - 806-030 *SPEARS* (S16-A02)	806-030	$ 5.74	1	$ 5.74
1029	**5226**	UNION 3IN SCH80 SxS VITON O-RG - 857-030 *SPEARS* (S16-A07)	857-030	$ 18.71	1	$ 18.71
1030	**5228**	ELL 45 DEG. 3IN SXS SCH80 PVC - 817-030 *SPEARS* (S16-A03)	817-030	$ 13.18	1	$ 13.18
1031	**5247**	PIPE 1/2IN CPVC SCH80 20FT LNG - 3670-005 (PR1-H04)		$ 0.93	1	$ 0.93
1032	**5250**	PIPE 2IN CPVC SCH80 20FT LNG - 3670-020 (PR1-H01)		$ 4.30	21	$ 90.30
1033	**5282**	PIPE 3IN SCH80 PVC - 0503080 (PR2-C02)		$ 3.30	1	$ 3.30
1034	**5283**	PIPE 6IN SCH80 PVC - 0506080 (PR2-B01)		$ 9.10	211	$ 1,920.10
1035	**5284**	PIPE 8IN SCH80 PVC - PART #0508080		$ 13.50	1	$ 13.50
1036	**5285**	VALVE 1/2IN BALL SCH80 PVC SxS - 2622-005G (S16-E42)	2622-005G	$ 5.28	11	$ 58.08
1037	**5287**	REDUCER 1/2 X 1/4IN SxF SCH80 - 838-072 *SPEARS* (S16-E16)	838-072	$ 1.00	11	$ 11.00
1038	**5288**	REDUCER 3/4 X 1/4IN SxF SCH80 - 838-098 *SPEARS* (S16-E17)	838-098	$ 0.70	5	$ 3.50
1039	**5289**	PIPE 1/2IN SCH80 PVC - 0505080 (PR1-E02)		$ 0.37	111	$ 41.07
1040	**5363**	TEE 3IN SxSxS SCH 80 801-030 (S16-A01)	801-030	$ 10.57	1	$ 10.57
1041	**5365**	VALVE 3IN BUTTERFLY FLANGED - SCH80 #251311-030	251311-030	$ 160.00	1	$ 160.00
1042	**5366**	ELL 3IN 22-1/2 DEG. SCH80		$ 16.10	1	$ 16.10
1043	**5367**	COUPLING 3IN SxS SCH80 829-030 5/BX *SPEARS* (S16-A05)	829-030	$ 7.70	2	$ 15.40
1044	**5369**	REDUCER 8IN X 6IN SCH80		$ 35.20	1	$ 35.20
1045	**5370**	COUPLING 8IN SxS SCH80		$ 25.29	1	$ 25.29
1046	**5371**	TEE 4IN SxSxS SCH80 801-040	801-040	$ 12.26	1	$ 12.26
1047	**5372**	REDUCER 4IN X 1IN SxTHRD SCH80 - 4IN SLIPx1IN THRD		$ 19.47	1	$ 19.47
1048	**5373**	TEE 8IN W/8IN SPIGOT CLEAN OUT - AND PLUG-SCH80		$ 221.40	1	$ 221.40
1049	**5385**	ADAPTER 4IN FEMALE SCH80 PVC - PART #835-040 *SPEARS*	835-040	$ 24.06	1	$ 24.06
1050	**5386**	ELL 45 DEG 4IN SCH80 PVC - PART #817-040 *SPEARS*	817-040	$ 23.73	1	$ 23.73
1051	**5513**	CROSS 3IN SLIP SCH80		$ 28.94	1	$ 28.94
1052	**5807**	REDUCER 2IN SLIP X 3/4IN FPT - SCH80 PVC		$ 2.79	1	$ 2.79
1053	**5819**	ADAPTER 4IN MALE SCH80 836-040 *SPEARS* (S17-A09)	836-040	$ 13.49	11	$ 148.39
1054	**5824**	REDUCER 2 X 1/2IN SCH80 SxF - PVC BUSHING		$ 3.30	1	$ 3.30
1055	**6008**	REDUCER 1 1/2 X 1 1/4 SCH80 25/BX 837-212 *SPEARS* (S16-E21)	837-212	$ 2.24	174	$ 389.76
1056		**15. SUBTOTAL**				**$ 17,919.60**
1057		**16. STAINLESS STEEL**				
1058	**588**	INSERT 3/4IN FOR POLY TUBING - 51 SS (S06-D01)	51 SS	$ 1.26	52	$ 65.52
1059	**589**	INSERT 1IN S.S FOR POLY TUBING - INSERT -52 100/B0X (S06-D03)	52 SS	$ 1.38	1977	$ 2,728.26
1060	**590**	INSERT 1-1/2IN FOR POLY TUBING - 54 SS (S06-D02)	54 SS	$ 1.84	1	$ 1.84
1061	**591**	INSERT 2IN SS FOR POLY TUBING - INSERT-55 (S06-D04)	55 SS	$ 1.90	34	$ 64.60
1062	**1261**	NIPPLE 1 1/4" X CL 316 SS (S10-C17)	316 SS	$ 2.50	11	$ 27.50
1063	**1696**	PIPE 2IN SCH40 SS 316/316L (PR1-I01)	316 SS	$ 12.30	1	$ 12.30
1064	**2009**	NIPPLE 2x6 SCHD 40 - 316 S.S. (S15-B28)	316 S.S.	$ 11.90	2	$ 23.80

	A	B	E	G	H	I
1065	2753	NIPPLE 2X6IN SCH/40 - 304/SS (S15-B27)	304 S.S.	$ 8.30	1	$ 8.30
1066	5917	NIPPLE 1 1/2 X 3IN S.S. (S15-B29)		$ 3.40	1	$ 3.40
1067		**16. SUBTOTAL**				**$ 2,935.52**
1068		**17. TAP SADDLES, ALL TYPES / SMITH-BLAIR OR APPROVED EQUAL**				
1069	746	SADDLE 2"x1" TAP S/B 2.35-2.56 315-025608-000 (S08-B01)	315-025608-000	$ 20.80	1	$ 20.80
1070	747	SADDLE TAP 3" X 1" S/B 2.97 - 3.54 315-035408-000 (S08-B02)	315-035408-000	$ 21.65	1	$ 21.65
1071	748	SADDLE TAP 3" X 1" D/B 2.97 - 3.54 317-035408-000 (S08-B03)	317-035408-000	$ 37.41	1	$ 37.41
1072	749	SADDLE TAP 3-4" X 2" D/B 3.74-4.13 317-041314-000 (S08-B04)	317-041314-000	$ 42.00	1	$ 42.00
1073	750	SADDLE 4 X 1 TAP S/B 3.74-4.55 315-00045508-000 (S08-B06)	315-00045508-000	$ 22.22	11	$ 244.42
1074	754	SADDLE 4" X 1-1/2" TAP D/B 5.00 - 5.63 317-056312-000 (S08-B08)	317-056312-000	$ 38.65	1	$ 38.65
1075	755	SADDLE 4" X 2" TAP S/B 4.74 - 5.63 315-056314-000 (S08-B09)	315-056314-000	$ 26.21	3	$ 78.63
1076	756	SADDLE TAP 6"x1" S/B 5.94 - 6.90 315-066308-000 *8 PER BX* (S07-D14)	315-066308-000	$ 23.20	171	$ 3,967.20
1077	759	SADDLE 6 X 1-1/2 TAP S/B 6.84-7.60 315-076012-000 (S08-B10)	315-076012-000	$ 27.70	1	$ 27.70
1078	760	SADDLE 6" X 2" TAP D/B 6.84 - 7.60 317-076014-000 (S08-B12)	317-076014-000	$ 46.60	1	$ 46.60
1079	761	SADDLE 6" X 2" TAP S/B 6.84 - 7.60 315-076014-000 (S08-B11)	315-076014-000	$ 28.70	3	$ 86.10
1080	766	SADDLE 8"x2" TAP SB 8.54 - 10.10 315-00101014-000 (S08-B14)	315-00101014-000	$ 34.50	1	$ 34.50
1081	767	SADDLE 8" X 2" TAP D/B 8.54 - 10.10 317-101014-000 (S08-B15)	317-101014-000	$ 56.90	1	$ 56.90
1082	769	SADDLE 10" X 1-1/2" TAP D/B - 10.75-11.10 317-111012 (S08-C01)	317-111012	$ 62.00	1	$ 62.00
1083	770	SADDLE 10" X 2" TAP D/B 10.64-12.12 317-121214-000 (S08-C02)	317-121214-000	$ 66.50	1	$ 66.50
1084	771	SADDLE 10" X 2" TAP S/B 10.64 - 12.12 315-121214-000 (S08-C03)	315-121214-000	$ 38.80	1	$ 38.80
1085	772	SADDLE 12"x 1" TAP 12.62 - 14.32 SB 315-00143208-000 (S08-C04)	315-00143208-000	$ 35.80	15	$ 537.00
1086	773	SADDLE 12" X 1" TAP D/B 12.62 - 14.32 317-143208-000 (S08-C05)	317-143208-000	$ 66.70	1	$ 66.70
1087	774	SADDLE 12" X 1-1/2" TAP D/B 12.62 - 14.32 317-143212-000 (S08-C06)	317-143212-000	$ 71.39	1	$ 71.39
1088	775	SADDLE 12" X 1-1/2" TAP D/B 12.75 - 13.20 317-132012-000 (S08-C07)	317-132012-000	$ 71.40	1	$ 71.40
1089	776	SADDLE 12" X 2" TAP D/B 12.62 - 14.32 317-143214-000 (S08-C08)	317-143214-000	$ 74.60	4	$ 298.40
1090	779	SADDLE 16" X 1" TAP D/B 17.40 - 18.88 317-188808-000 (S08-C11)	317-188808-000	$ 94.80	1	$ 94.80
1091	780	SADDLE 16" X 1-1/2" TAP D/B 15.95 - 17.25 317-172512-000 (S08-C12)	317-172512-000	$ 96.50	1	$ 96.50
1092	781	SADDLE 16-18" X 1-1/2" TAP D/B 17.40-18.88 317-188812-000 (S08-D01)	317-188812-000	$ 99.00	1	$ 99.00
1093	782	SADDLE 16" X 2" TAP D/B 17.40-18.88 317-188814-000 (S08-D02)	317-188814-000	$ 99.00	1	$ 99.00
1094	783	SADDLE 18" X 1" TAP D/B 19.00-20.50 JCM 645320 (S08-D03)	645320	$ 126.10	1	$ 126.10
1095	785	SADDLE 20" X 1" TAP D/B 21.35 - 22.60 JCM 406-2260X08IP (S08-D04)	406-2260X08IP	$ 141.20	1	$ 141.20
1096	786	SADDLE 20" X 2" TAP D/B 21.35 - 22.60 JCM 406-2260X14IP (S08-D05)	406-2260X14IP	$ 148.30	1	$ 148.30
1097	787	SADDLE 24-26" X 1" TAP D/B 25.50-26.50 JCM 406-2650X08IP (S08-D06)	406-2650X08IP	$ 195.00	1	$ 195.00
1098	1308	SADDLE TAP 3-4" X 2" S/B 3.74 - 4.55 315-00045514-000 (S08-B05)	315-00045514-000	$ 26.20	3	$ 78.60
1099	1757	SADDLE 14" X 2" TAP D/B 14.73 - 15.65 317-156514-000 (S08-C09)	317-156514-000	$ 81.80	1	$ 81.80
1100	2045	SADDLE 8"x1" TAP S/B 8.54 - 10.10 315-101008-000 (S07-D13)	315-101008-000	$ 28.65	36	$ 1,031.40
1101	2754	SADDLE TAP 4"x1" S/B 4.74 - 5.63 315-056308-000 (S08-B07)	315-056308-000	$ 21.60	8	$ 172.80
1102	3766	SADDLE TAP 16"x1" S/B FORD 17.40-18.40 FC-202-1840-IP4 (S08-C10)	FC-202-1840-IP4	$ 138.90	1	$ 138.90
1103	5293	SADDLE 6"X1" TAP D/B 5.94 - 6.90 317-069008-000	317-069008-000	$ 40.30	1	$ 40.30
1104	5528	SADDLE 10" x 1" TAP S/B 10.64 - 12.12 315-121208-000 (S08-B16)	315-121208-000	$ 31.70	1	$ 31.70
1105	5803	SADDLE 6"x 2" TAP D/B 5.94 - 6.90 317-069014-000	317-069014-000	$ 48.20	1	$ 48.20
1106	5916	SADDLE 2 1/2" X 1 1/2" S/B 2.44 - 2.91 315-029112-000 (S08-B13)	315-029112-000	$ 25.10	1	$ 25.10
1107		**17. SUBTOTAL**				**$ 8,563.45**
1108						
1109		**18. TOOLS, SHOVELS, RAKES / REED, 3M, RAZORBACK OR APPROVED EQUAL**				
1110	170	WRENCH FOR LOCKING LID - VALVE BOX 59WL (B02-21)	59WL	$ 15.10	4	$ 60.40
1111	231	SPRING 32MM FOR JAW WRENCH (B02-78)		$ 100.00	1	$ 100.00
1112	232	JAW 1-1/4IN FOR JAW WRENCH - ONE HANDED 32MM (B02-77)		$ 100.00	1	$ 100.00
1113	275	BLADE 1-1/2IN SCISSOR SHEAR - REED #SC1/PIPE CUTTER (B04-24)	REED #SC1	$ 31.00	1	$ 31.00
1114	335	BLADE FOR 18IN PVC SAW - PPS18B REED *PER EA.* (B13-C01)	PPS18B	$ 25.00	7	$ 175.00
1115	336	SAW HAND 18IN FOR PVC - PPS18 REED *PER EA.* (B13-D01)	PPS18	$ 25.00	7	$ 175.00
1116	809	CURB BX BSE/ARCH PAT 1 1/4X5FT - W/27/32IN BRASS PLUG (S09-A05)		$ 34.62	1	$ 34.62
1117	810	STATIONARY ROD FOR CURB VALVE - 5FT 59ROD60 FORD (S09-A06)	59ROD60	$ 24.31	1	$ 24.31
1118	811	HANDLE T-SHUT OFF ROD 5FT - FORD 59SROD5	59SROD5	$ 16.70	1	$ 16.70
1119	820	HOOK MANHOLE COVER - P553 (S09-B13)	P553	$ 20.70	3	$ 62.10
1120	822	PROBE FIBERGLASS W/TEE HANDLE - 4FT (S09-B15)		$ 26.20	31	$ 812.20
1121	823	WRENCH ADJUSTABLE HYDRANT - AHW (S09-B16)		$ 18.80	8	$ 150.40
1122	1108	SHOVEL ROUND-POINT RAZORBACK - 65UF45520 (SW-04)	65UF45520	$ 25.00	68	$ 1,700.00
1123	1110	SHOVEL SQUARE-POINT RAZORBACK - 65UF44124 (SW-10)	65UF44124	$ 25.00	23	$ 575.00
1124	2018	PIN ASSEMBLY FOR JAW WRENCH - 92727 MW-PS (B02-75)		$ 8.00	1	$ 8.00
1125	2019	PIN 3/16IN SPRIAL F/JAW WRENCH - 30008 (B02-76)		$ 5.00	1	$ 5.00
1126	2092	CUTTER PVC PIPE 1-1/2IN - REED RS1 (B12-C01)	RS1	$ 84.44	19	$ 1,604.36
1127	2750	WRENCH VALVE KEY TELESCOPIC - 2x4-8FT STEEL (S09-A07)		$ 93.60	1	$ 93.60
1128	2785	CRIMPING TOOL 3/4-1 IN STEEL - PES1CTS FOR POLY (B01-H10)		$ 54.90	1	$ 54.90
1129	2830	BLADE 1-1/2IN RATCHET SHEARS - RS-1B REED (B12-C02)	RS-1B	$ 27.60	21	$ 579.60
1130	3168	HANDLE POST HOLE DIGGER - 72/IN WOOD (SW-14)		$ 65.90	1	$ 65.90
1131	3259	BLADE 2IN RATCHET SHEARS REED - RS2 REED (B04-23)	RS2	$ 34.80	4	$ 139.20
1132	5015	WRENCH VALVE OPERATING 2IN SQ. X 6FT LONG (S09-C11)		$ 60.60	2	$ 121.20
1133	5767	HOOK MANHOLE 36IN (S09-B14)		$ 20.70	6	$ 124.20
1134		**18. SUBTOTAL**				**$ 6,812.69**

	A	B	E	G	H	I
1135		**19. VALVES/GATE, STEEL/CLOW,DEZURIK, KENNEDY OR APPROVED EQUAL**				
1136	**988**	VALVE 2IN GATE KENNEDY FG#4597 - 200W / IRON (S11-C19)	4597 - 200W	$ 324.14	1	$ 324.14
1137	**989**	VALVE 4IN PLUG DEZURIK - FIG118.F.6.RS26.ANG (S12-E06)	FIG118.F.6.RS26.ANG	$ 293.90	1	$ 293.90
1138	**990**	VALVE 4IN CHECK FLANGED (S12-E07)		$ 579.53	1	$ 579.53
1139	**991**	VALVE 4IN GATE F6100 MJ - R/S (S12-E08)	F6100 MJ - R/S	$ 340.86	7	$ 2,386.02
1140	**992**	VALVE 6IN GATE F6100 MJ - R/S L/ACC (S12-E09)	F6100 MJ - R/S	$ 435.25	3	$ 1,305.75
1141	**994**	VALVE 6" GATE F6106 MJ / FLANGE (S12-E10)	F6106 MJ / FLANGE	$ 607.14	1	$ 607.14
1142	**995**	VALVE 8IN GATE F6100 MJ - R/S (S12-E11)	F6100 MJ - R/S	$ 692.79	3	$ 2,078.37
1143	**1789**	VALVE 2IN GATE/RW F-THD. IRON - F6103 CLOW (S11-C20)	F6103	$ 208.02	8	$ 1,664.16
1144	**2093**	VALVE 10IN GATE F6100 MJ R/S (S12-E13)	F6100 MJ R/S	$ 1,080.25	1	$ 1,080.25
1145	**2214**	VALVE 12IN GATE F6100 MJ - R/S (S12-E12)	F6100 MJ - R/S	$ 1,366.92	3	$ 4,100.76
1146	**2722**	VALVE 12IN PLUG W/GEAR & 2NUT - 10785901052255 (S10-E09)	10785901052255	$ 1,860.98	1	$ 1,860.98
1147	**4207**	VALVE 3IN FLGED PLUG DEZURIK W BURIED SERV ADAPTER (S12-E04)		$ 247.56	1	$ 247.56
1148	**4208**	VALVE 2IN FLANGED PLUG DEZURIK W/BURIED SERV. ADAPT (S12-E02)		$ 163.41	1	$ 163.41
1149	**4209**	VALVE 3IN FLANGED KENNEDY SPRING & LEVER (S12-E03)		$ 749.88	1	$ 749.88
1150	**4210**	VALVE 2IN CHECK FLANGED KENNEDY SPRING & LEVER (S12-E01)		$ 934.35	1	$ 934.35
1151	**5374**	VALVE 3IN GATE F6100 MJ RW L/ACC - R/S (S12-E05)	F6100 MJ RW L/ACC - R/S	$ 305.31	1	$ 305.31
1152	**5766**	VALVE 16IN MJ GATE - F6100 W/SQ OPERATING NUT	F6100	$ 4,582.01	1	$ 4,582.01
1153	**5773**	VALVE 6IN TAPPING F6114 MJ RW	F6114 MJ RW	$ 607.14	1	$ 607.14
1154	**5785**	VALVE 3IN GATE F6102 R/S - FLANGED W/HAND WHEEL	F6102 R/S	$ 302.41	1	$ 302.41
1155	**5789**	VALVE 6IN CHECK SPR & LVR - KENNEDY #106LS	106LS	$ 1,188.16	1	$ 1,188.16
1156	**5790**	VALVE 6IN PLUG DEZURIK #F118N - FLANGED W/2IN OP NUT	F118N	$ 517.07	1	$ 517.07
1157	**5821**	VALVE 8IN DEZURIK PLUG FLANGED - 2IN OP NUT/#F118N	F118N	$ 724.39	1	$ 724.39
1158	**5841**	VALVE 4IN KENNEDY SPRING/LEVER - FLANGED STYLE 106SL	106SL	$ 883.24	1	$ 883.24
1159	**6092**	VALVE 2 1/2" GATE/RW THRD F6103 CLOW (S11-C21)	F6103	$ 257.54	1	$ 257.54
1160		**19. SUBTOTAL**				**$ 27,743.47**
1161						
1162		**20. NO-LEAD BRASS ITEMS / FORD, MUELLER OR APPROVED EQUAL**				
1163	**10**	ADAPTER HYD 2 1/2" x 2" FXM SWIVEL (S06-B33)		$ 88.57	5	$ 442.85
1164	**283**	VALVE SWING CHECK 1 1/2" BRASS M31 5 PER BX (S06-F08)	M31	$ 24.90	553	$ 13,769.70
1165	**566**	VALVE 1-1/2IN BALL MxFL - BF83-666W BRASS (S06-E39)	BF83-666W	$ 145.90	1	$ 145.90
1166	**567**	VALVE 2IN BALL MIPxMF LW BRASS - BF83-77W FORD (S06-E41)	BF83-77W	$ 236.00	2	$ 472.00
1167	**568**	CORP 1-1/2IN STOP MPTxCTS/PJ - BF1100-6 (S06-E40)	BF1100-6	$ 114.10	0	$ -
1168	**569**	BALL CORP 1-1/2IN MxF - FB1700-6 (S06-D05)	FB1700-6	$ 110.40	1	$ 110.40
1169	**570**	BALL CORP 2IN MxF BRASS - FB1700-7 *2 PER BX* (S06-E38)	FB1700-7	$ 178.60	8	$ 1,428.80
1170	**578**	BACKFLOW 3/4IN VAC BRKR 8B07 - WATTS EDP# 0061992 (S06-E45)	8B07 / 61992	$ -	7	$ -
1171	**592**	NIPPLE 3/4xCL TBE BRASS - 2012-001 (S06-E26)	2012-001	$ 2.04	112	$ 228.48
1172	**593**	NIPPLE 1IN X CL BRASS - 2016-001 (S06-E23)	2016-001	$ 3.00	40	$ 120.00
1173	**594**	NIPPLE 1IN x 3IN BRASS TBE - 2016-300 (S06-E22)	2016-300	$ 5.00	32	$ 160.00
1174	**595**	NIPPLE 1-1/2IN x CL BRASS - 2024-001 (S06-E17)	2024-001	$ 5.90	10	$ 59.00
1175	**596**	NIPPLE 1-1/2 x 3IN BRASS - 2024-300 (S06-E18)	2024-300	$ 8.80	8	$ 70.40
1176	**597**	NIPPLE 2IN X CL BRASS TBE - 2032-001 (S06-E21)	2032-001	$ 9.00	26	$ 234.00
1177	**598**	NIPPLE 2INx4IN TBE BRASS - 2032-400 (S06-E14)	2032-400	$ 14.70	9	$ 132.30
1178	**599**	VALVE 3/4IN GATE FPT BRASS - 3407GM300 (S06-F02)	3407GM300	$ 8.40	300	$ 2,520.00
1179	**600**	VALVE 1IN GATE FPT BRASS - 200 WOG *5 PER BX* (S06-C01)	200 WOG	$ 11.70	0	$ -
1180	**601**	VALVE 1-1/2IN GATE FPT BRASS - #200 WOG FPT *4 PER BX* (S06-C02)	200 WOG	$ 24.50	5	$ 122.50
1181	**602**	VALVE 2IN GATE FPT BRASS - #200 WOG FPT *2 PER BX* (S06-C03)	200 WOG	$ 34.20	1	$ 34.20
1182	**603**	VALVE 3/4IN HOSE BIBB BRASS - 3407HBM (S06-C11)	3407HBM	$ 10.00	430	$ 4,300.00
1183	**604**	VALVE 1IN HOSE BIBB BRASS - #107-265/T-531 MALE (S06-C12)	107-265/T-531	$ 15.00	0	$ -
1184	**605**	VALVE 3/4IN STR DUAL CK BRASS - HHS31-323 FORD *8 PER BX* (S06-D22)	HHS31-323	$ 48.20	2055	$ 99,051.00
1185	**606**	VALVE 1IN STRAIGHT DUAL CHECK - BRASS FORD#HHS31-344 (S06-D23)	HHS31-344	$ 54.90	20	$ 1,098.00
1186	**607**	CORP 1IN STOP BRASS - CTS/PJ X TAPER MPT		$ 39.60	0	$ -
1187	**610**	VALVE 3/4X5/8IN ANGLE KEY - KV13-332W BRASS *12 PER BX* (S06-D28)	KV13-332W	$ 24.90	45	$ 1,120.50
1188	**611**	VALVE 3/4X3/4IN ANGLE KEY - KV43-332WG BRASS *8 PER BX* (S06-D32)	KV43-332WG	$ 31.90	3	$ 95.70
1189	**613**	VALVE 1IN ANGLE KEY BRASS - KV13-444W *5 PER BX* (S06-D26)	KV13-444W	$ 37.30	32	$ 1,193.60
1190	**614**	VALVE 1X1IN ANGLE KEY - BRASS P/N-KV43-444WG *5 PER BX* (S06-D27)	KV43-444WG	$ 43.60	2	$ 87.20
1191	**615**	COUPLING 3/4IN COMP/SINGLE - C84-33G MPJxCTS/PJ BR 24 bx (S06-D15)	C84-33G	$ 12.00	7	$ 84.00
1192	**616**	COUPLING 1IN COMP/SINGLE BRASS C84-44G MPTxCTS/PJ 14 PER BX (S06-D17)	C84-44G	$ 14.30	44	$ 629.20
1193	**618**	COUPLING 3/4IN DOUBLE COMP - CTS/PJ #C44-33 BRASS	C44-33G	$ 14.70	0	$ -
1194	**620**	COUPLING 2IN COMP DBL GRIP/JNT - BRASS #C44-77G FORD (S06-D09)	C44-77G	$ 75.50	2	$ 151.00
1195	**626**	METER COUPLING 3/4IN BRASS - PLUMBERS PIECES (S06-C17)		$ 7.80	75	$ 585.00

	A	B	E	G	H	I
1196	**627**	METER COUPLING 1 IN BRASS - PLUMBERS PIECE (S06-C18)		$ 12.00	35	$ 420.00
1197	**629**	TEE 1IN BRASS FPT (S06-C19)		$ 8.95	13	$ 116.35
1198	**630**	ELL 90 2IN ST FxMPT BRASS - 30209E (S06-C23)	30209E	$ 29.88	3	$ 89.64
1199	**631**	REDUCER 1X3/4IN BRASS FXM/THD - MUELLER/METER (S06-E31)		$ 10.63	36	$ 382.68
1200	**633**	REDUCER 1-1/2 X 1IN MPTxFPT - BRASS (S06-E30)		$ 7.22	118	$ 851.96
1201	**634**	REDUCER 2-1/2IN x 2IN MxF - BRASS BUSHING (S06-E33)		$ 35.60	5	$ 178.00
1202	**635**	ADAPTER HYD 2 1/2" X 2" BRASS - MNST (S06-B38)		$ 25.38	25	$ 634.50
1203	**636**	ADAPTER HYD 2 1/2" x 3/4" BRASS - FNST X MIPT (S06-B34)		$ 16.63	3	$ 49.89
1204	**637**	ADAPTER HYD 2 1/2" X 1" BRASS (S06-B35)		$ 17.50	3	$ 52.50
1205	**638**	ADAPTER HYD 2 1/2" x 1 1/2" - BRASS (S06-B36)		$ 18.10	0	$ -
1206	**639**	ADAPTER HYD 2 1/2" X 2" BRASS FXM (S06-B37)		$ 17.24	3	$ 51.72
1207	**644**	HOSE NOZZLE 2 1/2" BRASS AMLOK 84-20-3 (S06-B31)	84-20-3	$ 114.90	1	$ 114.90
1208	**651**	RESETTER COPPER 5/8 x 3/4 x 7 - V42-7W (S06-F03)	V42-7W	$ 71.50	114	$ 8,151.00
1209	**652**	RESETTER COPPER 5/8 x 3/4 x 9 - V42-9W FORD (S06-F04)	V42-9W	$ 72.40	23	$ 1,665.20
1210	**653**	RESETTER COPPER 5/8 X 3/4 X 12 V42-12W (S06-F06)	V42-12W	$ 75.00	18	$ 1,350.00
1211	**654**	RESETTER COPPER 1 X 10IN - FORD V44-10W (S07-E13)	V44-10W	$ 139.90	0	$ -
1212	**655**	RESETTER COPPER 1 X 12IN - FORD V44-12W (S07-E14)	V44-12W	$ 143.20	0	$ -
1213	**1198**	NIPPLE 1/4" X 2" BRASS 2271-419 (S06-C38)	2271-419	$ 1.40	3	$ 4.20
1214	**1307**	BALL 2IN CURB STOP FXF BRASS - B11-77W FORD *2 PER BX* (S06-E43)	B11-77W	$ 193.40	4	$ 773.60
1215	**1377**	NIPPLE 1 X 36IN BRASS TBE (S06-E03)		$ 57.50	4	$ 230.00
1216	**1378**	NIPPLE 1 1/2 X 36IN BRASS TBE (S06-E04)		$ 100.80	1	$ 100.80
1217	**1379**	NIPPLE 2IN X 3IN BRASS TBE - 2032-300 (S06-E15)	2032-300	$ 10.90	27	$ 294.30
1218	**1380**	ELL 90 DEG.3/4IN FPTxFPT BRASS - 4501-150 (S06-C27)	4501-150	$ 4.11	0	$ -
1219	**1381**	ELL 90 1IN FPT X FPT - BRASS (S06-C28)		$ 6.33	11	$ 69.63
1220	**1382**	ELL 1-1/2IN 90 FXF - BRASS (S06-C21)		$ 12.56	0	$ -
1221	**1383**	ELL 90 2IN FXF BRASS - 4501-400 (S06-C24)	4501-400	$ 20.44	5	$ 102.20
1222	**1572**	ADAPTER METER 1 X 3/4 IN MXF - BRASS #3907A24 PER PR. (S06-E37)	3907A24	$ 19.90	0	$ -
1223	**1573**	REDUCER 2 X 1-1/2IN MxF BRASS - HEX BUSHING (S06-E32)		$ 10.71	8	$ 85.68
1224	**1606**	REDUCER 1 X 3/4IN MPTxFPT - BRASS BUSHING (S06-E28)		$ 3.32	69	$ 229.08
1225	**1640**	COUPLING 5/8 X 3/4IN METER - C31-23 Ford BRASS (S06-E36)	C31-23	$ 11.40	2	$ 22.80
1226	**1655**	REDUCER 1 1/4X1IN MXF/THD - BRASS (S06-E29)		$ 5.66	7	$ 39.62
1227	**1656**	NIPPLE 3/4 X 36IN BRASS TBE - 2012-3600 (S06-E02)	2012-3600	$ 37.90	1	$ 37.90
1228	**1657**	NIPPLE 2 X 36IN BRASS TBE - 2032-3600 (S06-E01)	2032-3600	$ 128.60	3	$ 385.80
1229	**1775**	VALVE 1/2IN BALL FPT BRASS (S06-C04)		$ 11.50	5	$ 57.50
1230	**1776**	VALVE 1IN BALL FPT BRASS - 68-100 (S06-C06)		$ 24.50	34	$ 833.00
1231	**1809**	REDUCER 2 x 3/4IN MxF BRASS - 3020B07020B07 (S06-E34)	3020B07020B07	$ 12.89	8	$ 103.12
1232	**1810**	REDUCER 2x1IN MPTxFPT BRASS - 3020B10 (S06-E35)	3020B10	$ 12.89	15	$ 193.35
1233	**1811**	ELL 90 2IN CTS/PJ X CTS/PJ - L44-77 BRASS (S06-D06)	L44-77	$ 157.60	4	$ 630.40
1234	**1812**	VALVE 2IN ANGLE MTR STOP FxFLG - FORD #BFA13-777W *2 PER BX* (S06-E42)	BFA13-777W	$ 213.20	4	$ 852.80
1235	**1830**	TEE 2IN FPT BRASS (S06-C20)		$ 28.30	7	$ 198.10
1236	**2055**	VALVE 3/4X1IN ANGLE BRASS - KV13-342W *10 PER BX* (S06-D30)	KV13-342W	$ 26.30	36	$ 946.80
1237	**2056**	ADAPTER HYD 2 1/2" X 2" BRASS (S06-B32)		$ 17.50	0	$ -
1238	**2091**	COUPLING 2IN FPT x FPT BRASS - 4540-400 flagg (S06-C16)	4540-400	$ 17.62	13	$ 229.06
1239	**2459**	CROSS 2IN FPT BRASS (S06-C22)		$ 53.99	0	$ -
1240	**2667**	CAP 1-1/4IN THREADED BRASS (S06-C29)		$ 6.30	1	$ 6.30
1241	**2668**	ELL 90 3/4IN STREET FxM BRASS - X103-12 (S06-C25)	X103-12	$ 5.34	2	$ 10.68
1242	**2669**	ELL 90 1IN STREET FPTxMPT BRAS - X103-16 (S06-C26)	X103-16	$ 8.83	9	$ 79.47
1243	**2755**	NUT & 1IN GASKET ASSEMBLY GRIP NUT - BRASS (S06-C34)		$ 9.50	0	$ -
1244	**2756**	NUT & 1IN GASKET ASSEMBLY GRIP NUT GJCN4-4 - BRASS (S06-C35)	GJCN4-4	$ 9.50	50	$ 475.00
1245	**2762**	VALVE 2IN BALL FPT BRASS - 3420BM200 *2 PER BX* (S06-C08)	3420BM200	$ 94.00	15	$ 1,410.00
1246	**2907**	VALVE 3/4IN BALL FPT BRASS - 3407BM200 (S06-C05)	3407BM200	$ 15.90	131	$ 2,082.90
1247	**3022**	NIPPLE 3/4 X 3IN BRASS (S06-E27)		$ 3.50	25	$ 87.50
1248	**3112**	UNION 3/4IN FPT BRASS (S06-C30)		$ 10.71	0	$ -
1249	**3113**	UNION 1IN FPT BRASS (S06-C31)		$ 14.18	0	$ -
1250	**3126**	UNION 1 1/2IN FPT - BRASS (S06-C32)		$ 24.50	0	$ -
1251	**3127**	UNION 2IN 3/PC FPT BRASS - 3020U (S06-C33)	3020U	$ 37.72	1	$ 37.72
1252	**3481**	VALVE 1 X 3/4IN STRAIGHT BALL 5/BX- B43-342WG (S06-D29)	B43-342WG	$ 59.70	2	$ 119.40
1253	**3484**	VALVE 1X1IN STRAIGHT BALL - BRASS (S06-D31)		$ 66.37	1	$ 66.37

ADDENDUM #2 - REVISED BID REPLY SPREADSHEET
E-BID #20120009

	A	B	E	G	H	I
1254	3978	VALVE 1-1/2IN BALL FPT BRASS 3415BM200 (S06-C07)	3415BM200	$ 65.00	47	$ 3,055.00
1255	4039	VALVE 4IN GATE BRASS FPT #300 PART #3440GM300 (S06-C10)	3440GM300	$ 314.50	0	$ -
1256	5325	COUPLING 1IN DOUBLE COMP BRASS - C44-44G CTS GRIP *12 PER BX* (S06-D20)	C44-44G	$ 16.80	152	$ 2,553.60
1257	5380	COUPLING 2IN GRIP/JOINT BRASS - C84-77G MPTxCTS/GJ (S06-D18)	C84-77G	$ 56.80	16	$ 908.80
1258	5381	ELL 90 1IN COMP.GRIP BRASS - L44-44G FORD *8 PER BX* (S06-D21)	L44-44G	$ 24.30	129	$ 3,134.70
1259	5383	VALVE 3/4x1IN ANGLE U-BRANCH - UV-43-42-WG FORD *8 PER BX* (S06-F01)	UV-43-42-WG	$ 90.30	464	$ 41,899.20
1260	5384	CORP STOP 1IN BRASS MPTxCTS/G - F1100-4G FORD *6 PER BX* (S06-D24)	F1100-4G	$ 39.60	386	$ 15,285.60
1261	5389	COUPLING 1-1/2IN FPTxFPT BRASS - 30155 (S06-C15)	30155	$ 10.71	3	$ 32.13
1262	5390	VALVE ANGLE 3/4 x 1IN BRASS - KV43-342WG GRIP JNT (S06-D25)	KV43-342WG	$ 35.30	315	$ 11,119.50
1263	5403	VALVE 3IN GATE BRASS FPT - FIG. M300 (S06-C09)	M300	$ 128.10	1	$ 128.10
1264	5406	BALL 1-1/2IN CURB STOP FPTxFPT - BRASS FORD B11-666W *2 PER BX* (S06-D10)	B11-666W	$ 132.90	0	$ -
1265	5429	NUT ASSEM 1IN/FORD GRIP JOINTS - GJN4-4 (S06-B26)	GJN4-4	$ 8.00	0	$ -
1266	5430	NUT ASSEM 2IN/FORD GRIP JOINTS - GJN4-7 (S06-B25)	GJN4-7	$ 23.60	0	$ -
1267	5471	COUPLING 3/4IN DBL COMP BRASS GRIP/JOINT C44-33G 14/BX (S06-D19)	C44-33G	$ 14.61	3	$ 43.83
1268	5476	COUPLING 3/4IN FPT x FPT - BRASS (S06-C13)		$ 3.32	14	$ 46.48
1269	5477	COUPLING 1IN FPT x FPT BRASS (S06-C14)		$ 5.04	9	$ 45.36
1270	5479	NIPPLE 1IN X 6IN TBE BRASS (S06-E19)		$ 9.60	14	$ 134.40
1271	5588	NIPPLE 3/4 IN X 6 IN BRASS TBE (S06-E24)		$ 6.60	4	$ 26.40
1272	5589	NIPPLE 1 IN X 4 IN BRASS TBE (S06-E20)		$ 6.50	12	$ 78.00
1273	5590	NIPPLE 3/4 IN X 4 IN BRASS TBE (S06-E25)		$ 4.50	4	$ 18.00
1274	5677	NIPPLE 2IN X 6IN BRASS TBE (S06-E16)		$ 21.60	14	$ 302.40
1275	5748	VALVE SWING CHECK 2" BRASS M31 2 PER BX (S06-C36)	M31	$ 38.20	11	$ 420.20
1276	5771	ELL 90 3/4IN COMP GRIP BRASS L44-33G (S06-D16)	L44-33G	$ 18.90	0	$ -
1277	5802	VALVE 3/4IN X 3/4IN BALL CURB - FORD #B43-332W-G *5 PER BX* (S06-D11)	B43-332W-G	$ 55.20	21	$ 1,159.20
1278	5898	NIPPLE 3/4 x 12IN BRASS (S06-E05)		$ 12.60	1	$ 12.60
1279	5899	NIPPLE 3/4 x 18IN BRASS (S06-E07)		$ 19.20	0	$ -
1280	5900	NIPPLE 3/4 x 24IN BRASS (S06-E09)		$ 25.60	2	$ 51.20
1281	5901	NIPPLE 1 x 12IN BRASS (S06-E06)		$ 18.80	4	$ 75.20
1282	5902	NIPPLE 1 x 18IN BRASS (S06-E08)		$ 28.80	1	$ 28.80
1283	5903	NIPPLE 1 x 24IN BRASS (S06-E11)		$ 38.30	2	$ 76.60
1284	5904	NIPPLE 2 x 12IN BRASS (S06-E10)		$ 42.50	2	$ 85.00
1285	5905	NIPPLE 2 x18IN BRASS (S06-E13)		$ 65.10	2	$ 130.20
1286	5906	NIPPLE 2 x 24IN BRASS (S06-E12)		$ 86.80	0	$ -
1287	5918	VALVE 1 1/2 IN FPT x FPT - 2621-015 (S05-D03)	2621-015	$ 32.90	2	$ 65.80
1288	5927	COPR STOP 3/4 IN BRASS - 3/4 IN F1100-3-G *10 PER BX* (S06-D14)	F1100-3-G	$ 26.20	0	$ -
1289	5983	COUPLING COMP. 1 1/2" BRASS C44-66G (S06-D08)	C44-66G	$ 56.00	0	$ -
1290	5984	MALE ADPT. COMP. 1 1/2" BRASS C84-66G (S06-D07)	C84-66G	$ 39.00	0	$ -
1291	6015	VALVE 1 1/2 CHECK SINGLE HS11-666 *4 PER BX* (S06-E44)	HS11-666	$ 119.70	1	$ 119.70
1292	6070	VALVE BALL METER B13-332W 3/4x1 *6 PER BX* (S06-D13)	B13-332W	$ 49.10	10	$ 491.00
1293	6071	VALVE BALL METER B13-344W 3/4x1 *5 PER BX* (S06-D12)	B13-344W	$ 53.60	0	$ -
1294		**20. SUBTOTAL**				**$ 234,876.15**
1295		**21. METERS, WATER & ALL PARTS**				
1296	3	BACKFLOW 3/4" PREVENTER RPZ WILKINS XL (S10-B01)	975XL	$ 236.40	32	$ 7,564.80
1297	646	BACKFLOW 1" PREVENTER RPZ WILKINS 975XL (S10-B02)	975XL	$ 249.90	19	$ 4,748.10
1298	650	BACKFLOW 2" PREVENTER RPZ WILKINS 975XL	975XL	$ 486.80	13	$ 6,328.40
1299	5608	BACKFLOW 1 1/2" PREVENTER RPZ WILKINS 975XL (S10-B03)	975XL	$ 438.40	3	$ 1,315.20
1300		**21. SUBTOTAL**				**$ 19,956.50**
1301		**TOTAL BID REPLY**				**$ 869,321.26**
1302		**SUBTOTAL SUMMARY:**				
1303	1	**ALL GRINDER COMPENTS/FLOMATIC ONLY**				**$ 4,129.30**
1304	2	**BRASS ITEMS / FORD, MUELLER OR APPROVED EQUAL**				**$ 178,701.45**
1305	3	**D/I PARTS, ALL TYPES AMERICAN OR APPROVED EQUAL**				**$ 34,116.40**
1306	4	**DUCTILE IRON PIPE / McWANE OR APPROVED EQUAL**				**$ 2,122.56**
1307	5	**FIRE HYDRANT & PARTS**				**$ 63,134.62**
1308	6	**FLO-CONTROL HOT TAP SADDLES ONLY**				**$ 16,557.15**
1309	7	**GENERAL ITEMS**				**$ 43,113.94**
1310	8	**LIFT STATION PARTS/ US FOUNDRY OR APPROVED EQUAL**				**$ 2,925.51**
1311	9	**METER BOXES & LIDS**				**$ 88,394.24**

ADDENDUM #2 - REVISED BID REPLY SPREADSHEET
E-BID #20120009

	A	B	E	G	H	I
1312	10	METERS, WATER & ALL PARTS				$ 12,366.40
1313	11	PIPE, PVC 40, C900				$ 49,540.52
1314	12	PLUMBING PARTS / STREAMLINE-MUELLER OR APPROVED EQUAL				$ 3,261.00
1315	13	PVC PARTS & FITTINGS / SPEARS OR APPROVED EQUAL				$ 26,957.73
1316	14	REPAIR CLAMPS & FERNCOS / SMITH-BLAIR, FORD OR APPROVED EQUAL				$ 25,193.06
1317	15	SCH 80 PIPE & ALL FITTINGS / SPEARS OR APPROVED EQUAL				$ 17,919.60
1318	16	STAINLESS STEEL				$ 2,935.52
1319	17	TAP SADDLES, ALL TYPES / SMITH-BLAIR OR APPROVED EQUAL				$ 8,563.45
1320	18	TOOLS, SHOVELS, RAKES / REED, 3M, RAZORBACK OR APPROVED EQUAL				$ 6,812.69
1321	19	VALVES/GATE, STEEL/CLOW,DEZURIK, KENNEDY OR APPROVED EQUAL				$ 27,743.47
1322	20	NO-LEAD BRASS				$ 234,876.15
1323	21	METERS, WATER & ALL PARTS				$ 19,956.50
1324		TOTAL				$ 869,321.26
1325	PSL Part					
1326	FOR ITEMS NOT IDENTIFIED IN BID, PROVIDE DISCOUNTS FROM THE FOLLOWING MANUFACTURERS LIST PRICE:					
1327	Item #					Total
1328	1088			SMITH-BLAIR:		5.00%
1329	1089			CLOW:		5.00%
1330	1090			JCM:		5.00%
1331	1091			ROMAC:		5.00%
1332	1092			MUELLER:		5.00%
1333	1093			ARI AIR RELEASE		5.00%
1334	1094			VAL-MATIC		5.00%
1335	1095			SPEARS:		5.00%
1336	1096			FLO-CONTROL:		5.00%
1337	1097			KENNEDY:		5.00%
1338	1098			CUSTOM FAB:		5.00%
1339	1099			FORD:		5.00%
1340	1100			UNION/TYLER:		5.00%

DRUG-FREE WORKPLACE FORM

The undersigned vendor in accordance with Section 287.087, Florida Statutes hereby certifies that FERGUSON WATERWORKS does:
(Name of Business)

1. Publish a statement notifying employees that the unlawful manufacture, distribution, dispensing, possession, or use of a controlled substance is prohibited in the workplace and specifying the actions that will be taken against employees for violations of such prohibition.

2. Inform employees about the dangers of drug abuse in the workplace, the business's policy of maintaining a drug-free workplace, any available drug counseling, rehabilitation, and employee assistance programs, and the penalties that may be imposed upon employees for drug abuse violations.

3. Give each employee engaged in providing the commodities or Contractual services that are under bid a copy of the statement specified in subsection (1).

4. In the statement specified in subsection (1), notify the employees that, as a condition of working on the commodities or Contractual services that are under bid, the employee will abide by the terms of the statement and will notify the employer of any conviction of, or plea of guilty or nolo contendere to, any violation of Chapter 893 or of any controlled substance law of the United States or any state, for a violation occurring in the workplace no later than five (5) days after such conviction.

5. Impose a sanction on, or require the satisfactory participation in a drug abuse assistance or rehabilitation program if such is available in the employee's community, by any employee who is so convicted.

6. Make a good faith effort to continue to maintain a drug-free workplace through implementation of this section.

As the person authorized to sign the statement, I certify that this firm complies fully with the above requirements.

Ferney Montoya w/Ferguson Inc
Bidder's Signature

3/22/12
Date

CHECKLIST
Bid #20120009
Suppliers for Water and Sewer Products

Name of Bidder: Ferguson Waterworks Inc.

This checklist is provided to assist Bidders in the preparation of their bid response. Included in this checklist are important requirements that are the responsibility of each Bidder to submit with their response in order to make their bid response fully compliant. This checklist is only a guideline -- it is the responsibility of each Bidder to read and comply with the Invitation to Bid in its entirety.

- ✓ Drug-Free Workplace Form uploaded to Demandstar.
- ✓ Copy of $40,000.00 Bid Bond (or other form of security) uploaded to Demandstar (the original **MUST** be received within 3business days after the opening).
- ✓ E-Bid Reply Sheet #20120009 uploaded to Demandstar.
- ✓ E-Bid Reply Excel Spreadsheet uploaded to Demandstar.
- ✓ All pricing has been mathematically reviewed and all corrections have been initialed.
- ✓ All price totals have been thoroughly checked.
- ✓ Each E-Bid Addendum (if applicable) is acknowledged.
- ✓ Copy of Current Insurance Certificate in accordance with Section V of the Contract Form uploaded to Demandstar.
- ✓ Copy of License or certificates uploaded to Demandstar.
- ✓ Reviewed the Contract and accept all City Terms and Conditions

THIS FORM SHOULD BE RETURNED WITH YOUR E-BID REPLY SHEET

CERTIFICATE OF LIABILITY INSURANCE

DATE (MM/DD/YYYY) 07/18/2011

THIS CERTIFICATE IS ISSUED AS A MATTER OF INFORMATION ONLY AND CONFERS NO RIGHTS UPON THE CERTIFICATE HOLDER. THIS CERTIFICATE DOES NOT AFFIRMATIVELY OR NEGATIVELY AMEND, EXTEND OR ALTER THE COVERAGE AFFORDED BY THE POLICIES BELOW. THIS CERTIFICATE OF INSURANCE DOES NOT CONSTITUTE A CONTRACT BETWEEN THE ISSUING INSURER(S), AUTHORIZED REPRESENTATIVE OR PRODUCER, AND THE CERTIFICATE HOLDER.

IMPORTANT: If the certificate holder is an ADDITIONAL INSURED, the policy(ies)must be endorsed. If SUBROGATION IS WAIVED, subject to the terms and conditions of the policy, certain policies may require an endorsement. A statement on this certificate does not confer rights to the certificate holder in lieu of such endorsement(s).

PRODUCER

Willis of Maryland, Inc.
26 Century Blvd.
P. O. Box 305191
Nashville, TN 37230-5191

CONTACT NAME:
PHONE (A/C, NO, EXT): 877-945-7378 FAX (A/C, NO): 888-467-2378
E-MAIL ADDRESS: certificates@willis.com

INSURER(S) AFFORDING COVERAGE	NAIC #
INSURER A: National Union Fire Ins. Co. of Pittsburg	19445-002
INSURER B: National Union Fire Ins. Co. of Pittsburg	19445-000
INSURER C: National Union Fire Ins. Co. of Pittsburg	19445-001
INSURER D: New Hampshire Insurance Company	23841-002
INSURER E: Chartis Casualty Company, USA	40258-001
INSURER F:	

INSURED

Ferguson Enterprises, Inc. and Subsidiaries
(See Attached Named Insured Schedule)
12500 Jefferson Avenue
Newport News, VA 23602

COVERAGES **CERTIFICATE NUMBER:** 16290648 **REVISION NUMBER:**

THIS IS TO CERTIFY THAT THE POLICIES OF INSURANCE LISTED BELOW HAVE BEEN ISSUED TO THE INSURED NAMED ABOVE FOR THE POLICY PERIOD INDICATED. NOTWITHSTANDING ANY REQUIREMENT, TERM OR CONDITION OF ANY CONTRACT OR OTHER DOCUMENT WITH RESPECT TO WHICH THIS CERTIFICATE MAY BE ISSUED OR MAY PERTAIN, THE INSURANCE AFFORDED BY THE POLICIES DESCRIBED HEREIN IS SUBJECT TO ALL THE TERMS, EXCLUSIONS AND CONDITIONS OF SUCH POLICIES. LIMITS SHOWN MAY HAVE BEEN REDUCED BY PAID CLAIMS.

INSR LTR	TYPE OF INSURANCE	ADD'L INSRD	SUBR WVD	POLICY NUMBER	POLICY EFF (MM/DD/YYYY)	POLICY EXP (MM/DD/YYYY)	LIMITS	
A	GENERAL LIABILITY			2449570	8/1/2011	8/1/2012	EACH OCCURRENCE	$ 2,000,000
	X COMMERCIAL GENERAL LIABILITY						DAMAGE TO RENTED PREMISES (Ea occurrence)	$ 1,000,000
	CLAIMS-MADE X OCCUR						MED EXP (Any one person)	$ 10,000
							PERSONAL & ADV INJURY	$ 2,000,000
							GENERAL AGGREGATE	$ 5,000,000
	GEN'L AGGREGATE LIMIT APPLIES PER:						PRODUCTS - COMP/OP AGG	$ 2,000,000
	POLICY PRO-JECT LOC							$
B	AUTOMOBILE LIABILITY			MA 3976516	8/1/2011	8/1/2012	COMBINED SINGLE LIMIT (Ea accident)	$ 5,000,000
B	X ANY AUTO			AOS 3506434	8/1/2011	8/1/2012	BODILY INJURY (Per person)	$
C	ALL OWNED AUTOS / SCHEDULED AUTOS			VA 3506435	8/1/2011	8/1/2012	BODILY INJURY (Per accident)	$
	X HIRED AUTOS / X NON-OWNED AUTOS						PROPERTY DAMAGE (Per accident)	$
	X Self-Insured / X Physical Damage							$
	UMBRELLA LIAB / OCCUR						EACH OCCURRENCE	$
	EXCESS LIAB / CLAIMS-MADE						AGGREGATE	$
	DED / RETENTION $							$
D	WORKERS COMPENSATION AND EMPLOYERS' LIABILITY			AOS 015883921	8/1/2011	8/1/2012	X WC STATU-TORY LIMITS / OTH-ER	
E	ANY PROPRIETOR/PARTNER/EXECUTIVE OFFICER/MEMBER EXCLUDED? Y/N N (Mandatory in NH) If yes, describe under DESCRIPTION OF OPERATIONS below		N/A	AOS 015883924	8/1/2011	8/1/2012	E.L. EACH ACCIDENT	$ 2,000,000
							E.L. DISEASE - EA EMPLOYEE	$ 2,000,000
							E.L. DISEASE - POLICY LIMIT	$ 2,000,000

DESCRIPTION OF OPERATIONS / LOCATIONS / VEHICLES (Attach Acord 101, Additional Remarks Schedule, if more space is required)

See Attached for Additional Workers' Compensation Policies:

CERTIFICATE HOLDER

Evidence of Insurance

CANCELLATION

SHOULD ANY OF THE ABOVE DESCRIBED POLICIES BE CANCELLED BEFORE THE EXPIRATION DATE THEREOF, NOTICE WILL BE DELIVERED IN ACCORDANCE WITH THE POLICY PROVISIONS.

AUTHORIZED REPRESENTATIVE

M. Edward Ross III

© 1988-2010 ACORD CORPORATION. All rights reserved.
The ACORD name and logo are registered marks of ACORD

AGENCY CUSTOMER ID: 031419

LOC#:

ADDITIONAL REMARKS SCHEDULE

AGENCY	NAMED INSURED
Willis of Maryland, Inc.	Ferguson Enterprises, Inc. and Subsidiaries (See Attached Named Insured Schedule) 12500 Jefferson Avenue Newport News, VA 23602
POLICY NUMBER: See First Page	
CARRIER: See First Page / NAIC CODE:	EFFECTIVE DATE: See First Page

ADDITIONAL REMARKS

THIS ADDITIONAL REMARKS FORM IS A SCHEDULE TO ACORD FORM,
FORM NUMBER: 25 FORM TITLE: CERTIFICATE OF LIABILITY INSURANCE

WC Policy No. 015883921- AK, AL, AZ, CO, DE, IA, ID, ME, MI, MN, MT, NH, NJ, NV, NY, RI, UT, VA, VT, WV

WC Policy No. 015883924 - AR, CT, DC, GA, HI, IL, IN, KS, KY, LA, MD, MO, MS, NC, NE, NM, OK, PA, SC, SD, TN

Workers Compensation - CA
Policy No. 015883920
Carrier: Ins. Co. of the State of PA
Policy Period: 08/01/2011-2012
Statutory
Limits:
EL Each Accident $2,000,000
EL Disease - Each Employee $2,000,000
EL Disease - Policy Limit $2,000,000

Workers Compensation - FL
Policy No. 015883923
Carrier: New Hampshire Insurance Company
Policy Period: 08/01/2011-2012
Statutory
Limits:
EL Each Accident $2,000,000
EL Disease - Each Employee $2,000,000
EL Disease - Policy Limit $2,000,000

Workers Compensation - MA
Policy No. 015883922
Carrier: Ins. Co. of the State of PA
Policy Period: 08/01/2011-2012
Statutory
Limits:
EL Each Accident $2,000,000
EL Disease - Each Employee $2,000,000
EL Disease - Policy Limit $2,000,000

Workers Compensation - WI
Policy No. 015883926
Carrier: Illinois National Insurance Company
Policy Period: 08/01/2011-2012
Statutory
Limits:
EL Each Accident $2,000,000
EL Disease - Each Employee $2,000,000
EL Disease - Policy Limit $2,000,000

Workers Compensation - TX
Policy No. 015883919
Carrier: New Hampshire Insurance Company
Policy Period: 08/01/2011-2012
Statutory
Limits:
EL Each Accident $2,000,000
EL Disease - Each Employee $2,000,000
EL Disease - Policy Limit $2,000,000

Workers Compensation - OR
Policy No. 015883925
Carrier: Ins. Co. of the State of PA
Policy Period: 08/01/2011-2012
Statutory
Limits:
EL Each Accident $2,000,000
EL Disease - Each Employee $2,000,000
EL Disease - Policy Limit $2,000,000

 © 2008 ACORD CORPORATION. All rights reserved.
The ACORD name and logo are registered marks of ACORD

Willis

Ferguson Enterprises, Inc. and Subsidiaries.
List of Named Insureds

Air Cold Supply
Air Cold Supply/Webb Distributors
Alamo Pipe & Supply
Alaska Pipe & Supply
Build.com, Inc.
CAL-STEAM, a Wolseley Company
Camellia Valley Supply
Castle Supply Company, Inc.
CastleNorth
CFP
Chadwick
Clayton Group, Inc.
Clayton International, LLC
Cline Contract Sales
Colgan Cabinets
Colgan Distributors
Crow Company
D & C Plumbing & Heating Supply
Davidson Electric Wholesale Supply
The Davidson Corporation, a Delaware Corporation
The Davidson Group Companies, Inc
Davidson Group Leasing
Davidson Pipe Company Inc., a New York Corporation
Davidson Pipe Supply Company, Inc.
Davies Water
Decorative Product Source, Inc.
E & J Plumbing & Heating Supply Co.
Economy Plumbing and Heating Supply Co.
Endries International of Canada, Inc.
Endries International, Inc.
Energy & Process Corporation
Ferguson Bath Kitchen and Lighting Gallery
Ferguson CESCO, Inc.
Ferguson de Costa Rica Ltd.
Ferguson de Mexico S.A. de CV.
Ferguson Enterprises IV, Inc.
Ferguson Enterprises of Montana, Inc.
Ferguson Enterprises of Puerto Rico, Inc.
Ferguson Enterprises of Virginia, Inc.
Ferguson Enterprises V, Inc.
Ferguson Enterprises, Inc.
Ferguson Enterprises, Inc. of Virginia
Ferguson Fire & Fabrication, Inc.
Ferguson Fire & Fabrication, Inc. (fka Sierra Craft, Inc.)
Ferguson Full Service Supply
Ferguson Heating & Cooling
Ferguson Holdings, Inc.
Ferguson Hospitality Sales
Ferguson Industrial Plastics and Pump Division
Ferguson Integrated Systems Division, Inc.
Ferguson Intermountain Piping
Ferguson International
Ferguson Panama, S.A.
Ferguson Process Services
Ferguson Valve & Automation
Ferguson Waterworks
Ferguson Waterworks - Midwest Pipe
Ferguson Waterworks - Municipal Pipe
Ferguson Waterworks - Red Hed
Ferguson Waterworks EPPCO
Ferguson Waterworks International
Frischkorn, Inc.
Galleria Bath & Kitchen Showplace
Gilmour Supply Company, Inc.
Gulf Refrigeration Supply
High Country Plumbing Supply
Home Equipment Company, Inc.
Indiana Plumbing Supply Co., Inc.
Industrial Hub of the Carolinas
J&G Products
J.D. Daddario Company
Kandall Fabricating
L&H Supply, Inc.
Lane Piping Co.
Lawrence Plumbing Supply Co.
Lincoln Products
Linwood Pipe and Supply
Louisiana Utilities Supply Company
LUSCO
Lyon Conklin & Co., Inc.
Mastercraft Cabinets
Monotube Pile Corporation
Northern Water Works Supply, Inc.
Onda-Lay Pipe and Rental, Inc.
Page's Appliances
Palermo Supply

Willis

Ferguson Enterprises, Inc. and Subsidiaries.
List of Named Insureds

Park Supply
Pipe Products
Plumbing Décor
Plumb Source
R Supply Company
Record Supply Company
SEMSCO Barbados, LLC
SEMSCO Trinidad, LLC
SEMSCO Venezuela, LLC
Sierra Craft, Inc.
SOS Sales
Specialty Pipe & Tube, Inc.
Specialty Pipe & Tube of Texas, Inc.
Summer & Dunbar
Supply North Central Group
Stock Loan Services LLC
Tarpon Wholesale Supplies
T & A Valve Industries, Inc.
The Parnell-Martin Companies LLC
The Plumbers Warehouse
The Stock Market
Tubeco Fabrication, Inc.
United Automatic
Water Works Supplies
Webb Distributors
Western Air Systems and Controls, Inc.
WIA of California, Inc.
Wolseley Investments Acquisitions, Inc.
Wolseley Investments, Inc.
Wolselely NA Construction Services, LLC
Wolseley North America, Inc.
Wolseley North American Consulting, LLC
Wolseley North American Services, Inc.
WPCC Forwarding, LLC

THE AMERICAN INSTITUTE OF ARCHITECTS

AIA Document A310
Bid Bond

KNOW ALL MEN BY THESE PRESENTS, THAT WE Ferguson Enterprises, Inc. dba Ferguson Waterworks
4510 Prosperity Drive, Ft. Pierce, FL 34981

as Principal, hereinafter called the Principal, and Westchester Fire Insurance Company
436 Walnut Street, P. O. Box 1000, Philadelphia, PA 19106

a corporation duly organized under the laws of the State of PA

as Surety, hereinafter called the Surety, are held and firmly bound unto City of Port St. Lucie
121 S.W. Port St. Lucie Blvd., Port St. Lucie, FL 34984

as Obligee, hereinafter called the Obligee, in the sum of Forty Thousand Dollars and 00/100
Dollars ($ $40,000),

for the payment of which sum well and truly to be made, the said Principal and the said Surety, bind ourselves, our heirs, executors, administrators, successors and assigns, jointly and severally, firmly by these presents.

WHEREAS, the Principal has submitted a bid for Bid #20120009, Supply of Water and Sewer Products

NOW, THEREFORE, if the Obligee shall accept the bid of the Principal and the Principal shall enter into a Contract with the Obligee in accordance with the terms of such bid, and give such bond or bonds as may be specified in the bidding or Contract Documents with good and sufficient surety for the faithful performance of such Contract and for the prompt payment of labor and materials furnished in the prosecution thereof, or in the event of the failure of the Principal to enter such Contract and give such bond or bonds, if the Principal shall pay to the Obligee the difference not to exceed the penalty hereof between the amount specified in said bid and such larger amount for which the Obligee may in good faith contract with another party to perform the Work covered by said bid, then this obligation shall be null and void, otherwise to remain in full force and effect.

Signed and sealed this 22nd day of March

(Witness)

Ferguson Enterprises, Inc. dba Ferguson Enterprises
(Principal)

By: Linda Carvalho
(Title) Vice President

FERGUSON ENTERPRISES, INC. CORPORATE SEAL

Kimberly Heim
(Witness)

Westchester Fire Insurance Company
(Surety)

By: Wendy Lee Wadkins
Attorney-in-Fact Wendy Lee Wadkins

WESTCHESTER FIRE INSURANCE CO.

Surety Bond No: Bid Bond

Power of Attorney

Westchester Fire Insurance Company

Know all men by these presents: That WESTCHESTER FIRE INSURANCE COMPANY, a corporation of the Commonwealth of Pennsylvania pursuant to the following Resolution, adopted by the Board of Directors of the said Company on December 11, 2006, to wit:

"RESOLVED, that the following authorizations relate to the execution, for and on behalf of the Company, of bonds, undertakings, recognizances, contracts and other written commitments of the Company entered into the ordinary course of business (each a "Written Commitment"):

(1) Each of the Chairman, the President and the Vice Presidents of the Company is hereby authorized to execute any Written Commitment for and on behalf of the Company, under the seal of the Company or otherwise.

(2) Each duly appointed attorney-in-fact of the Company is hereby authorized to execute any Written Commitment for and on behalf of the Company, under the seal of the Company or otherwise, to the extent that such action is authorized by the grant of powers provided for in such persons written appointment as such attorney-in-fact.

(3) Each of the Chairman, the President and the Vice Presidents of the Company is hereby authorized, for and on behalf of the Company, to appoint in writing any person the attorney-in-fact of the Company with full power and authority to execute, for and on behalf of the Company, under the seal of the Company or otherwise, such Written Commitments of the Company as may be specified in such written appointment, which specification may be by general type or class of Written Commitments or by specification of one or more particular Written Commitments.

(4) Each of the Chairman, the President and Vice Presidents of the Company is hereby authorized, for and on behalf of the Company, to delegate in writing any other officer of the Company the authority to execute, for and on behalf of the Company, under the Company's seal or otherwise, such Written Commitments of the Company as are specified in such written delegation, which specification may be by general type or class of Written Commitments or by specification of one or more particular Written Commitments.

(5) The signature of any officer or other person executing any Written Commitment or appointment or delegation pursuant to this Resolution, and the seal of the Company, may be affixed by facsimile on such Written Commitment or written appointment or delegation.

FURTHER RESOLVED, that the foregoing Resolution shall not be deemed to be an exclusive statement of the powers and authority of officers, employees and other persons to act for and on behalf of the Company, and such Resolution shall not limit or otherwise affect the exercise of any such power or authority otherwise validly granted or vested.

Does hereby nominate, constitute and appoint Wendy Lee Wadkins all of the City of (Radnor), (PA), each individually if there be more than one named, its true and lawful attorney-in-fact, to make, execute, seal and deliver on its behalf, and as its act and deed any and all bonds, undertakings, recognizances, contracts and other writings in the nature thereof in penalties not exceeding FIVE MILLION DOLLARS ($5,000,000.00) and the execution of such writings in pursuance of these presents shall be as binding upon said Company, as fully and amply as if they had been duly executed and acknowledged by the regularly elected officers of the Company at its principal office,

IN WITNESS WHEREOF, the said Stephen M. Haney, Vice-President, has hereunto subscribed his name and affixed the Corporate seal of the said WESTCHESTER FIRE INSURANCE COMPANY this 1st day of January, 2011.

WESTCHESTER FIRE INSURANCE COMPANY

Stephen M. Haney, Vice President

COMMONWEALTH OF PENNSYLVANIA
COUNTY OF PHILADELPHIA ss.

On this 1st day of January AD. 2011 before me, a Notary Public of the Commonwealth of Pennsylvania in and for the County of Philadelphia came Stephen M. Haney, Vice-President of the WESTCHESTER FIRE INSURANCE COMPANY to me personally known to be the individual and officer who executed the preceding instrument, and he acknowledged that he executed the same, and that the seal affixed to the preceding instrument is the corporate seal of said Company; that the said corporate seal and his signature were duly affixed by the authority and direction of the said corporation, and that Resolution, adopted by the Board of Directors of said Company, referred to in the preceding instrument, is now in force.

IN TESTIMONY WHEREOF, I have hereunto set my hand and affixed my official seal at the City of Philadelphia the day and year first above written.

COMMONWEALTH OF PENNSYLVANIA
NOTARIAL SEAL
KAREN E. BRANDT, Notary Public
City of Philadelphia, Phila. County
My Commission Expires September 28, 2014

Notary Public

I, the undersigned Assistant Secretary of the WESTCHESTER FIRE INSURANCE COMPANY, do hereby certify that the original POWER OF ATTORNEY, of which the foregoing is a substantially true and correct copy, is in full force and effect.

In witness whereof, I have hereunto subscribed my name as Assistant Secretary, and affixed the corporate seal of the Corporation, this 22nd day of March 2012.

William L. Kelly, Assistant Secretary

BID ADDENDUM # 4
BID # 20120009
Addendum Date: April 2, 2012

SUPPLIERS FOR WATER AND SEWER PRODUCTS

Bid due date and time: Wednesday, April 4, 2012 @3:00 p.m.

CAUTION ALL BIDDERS: Please adhere to Section 6.4 Bid Information.

"For information concerning procedures for responding to this bid, contact Helen Quintana, CPPB, Contract Specialist, at (772) 871-5221 (Telephone); (772) 871-7337 (Fax); hquintana@cityofpsl.com, (e-mail). Such contact is to be for clarification purposes only. To ensure fair consideration for all Bidders, it must be clearly understood that Mrs. Quintana is the only individual who is authorized to represent the City. Questions submitted to any other person in any other department will not be addressed. Additionally, the City prohibits communications initiated by a Bidder to ***any*** *City Official or employee evaluating or considering the bids* ***(up to and including the Mayor and City Council)****, prior to the time an award decision has been made."*

Information from anyone other than the Contract Specialist via an Addendum is considered invalid.

Instructions to Bidder:

Each bidder must acknowledge receipt of any addenda on the Bid Reply Sheet in order to have his/her bid or proposal/bid to be accepted.

BID ADDENDUM # 3
BID # 20120009
Addendum Date: March 27, 2012

SUPPLIERS FOR WATER AND SEWER PRODUCTS

NOTE: The bid opening date is hereby changed to Wednesday, April 4, 2012 @3:00 p.m.

Please see the following changes/modifications to the subject bid:

1. QUESTIONS and ANSWERS

Q1. *Do we quote per foot price or price per piece of pipe?*
Example: Line item 1032 and 1033. One shows a dimension of pipe 20-ft and the other shows no dimension.

A1. All pipe is per foot.

2. REVISED BID REPLY EXCEL SPREADSHEET

The Bid Reply Spreadsheet has been revised as Addendum #2. The revised spreadsheet corrects line item calculations and adds two (2) additional categories: "NO-LEAD BRASS ITEMS/FORD, MUELLER OR EQUAL" and ("NO-LEAD) METERS, WATER & ALL PARTS".

Please use the Revised Bid Reply Spreadsheet – Addendum #2.

NOTE: The bid opening has been changed to Wednesday, April 4, 2012 @ 3:00 p.m.

Instructions to Bidder:

Each bidder must acknowledge receipt of any addenda on the Bid Reply Sheet in order to have his/her bid or proposal/bid to be accepted.

ADDENDUM #2 - REVISED BID REPLY SPREADSHEET
E-BID #20120009

	A	B	E	G	H	I
1		**Company Name:**				
2	Item	Item Description	Mfg. Part No.	Unit Price	Yrly Qty Est	Total
3		**1. ALL GRINDER COMPENTS/FLOMATIC ONLY**				
4	3328	VALVE BALL CHECK 1-1/4IN PVC - 208T (S04-B19)	208T	$ -	119	$ -
5		**1. SUBTOTAL**				**$ -**
6		**2. BRASS ITEMS / FORD, MUELLER OR APPROVED EQUAL**				
7	10	ADAPTER HYD 2 1/2" x 2" FXM SWIVEL (S06-B33)		$ -	5	$ -
8	283	VALVE SWING CHECK 1 1/2" BRASS M31 5 PER BX (S06-F08)	M31	$ -	553	$ -
9	566	VALVE 1-1/2IN BALL MxFL - BF83-666W BRASS (S06-E39)	BF83-666W	$ -	1	$ -
10	567	VALVE 2IN BALL MIPxMF LW BRASS - BF83-77W FORD (S06-E41)	BF83-77W	$ -	2	$ -
11	568	CORP 1-1/2IN STOP MPTxCTS/PJ - BF1100-6 (S06-E40)	BF1100-6	$ -	1	$ -
12	569	BALL CORP 1-1/2IN MxF - FB1700-6 (S06-D05)	FB1700-6	$ -	1	$ -
13	570	BALL CORP 2IN MxF BRASS - FB1700-7 *2 PER BX* (S06-E38)	FB1700-7	$ -	8	$ -
14	578	BACKFLOW 3/4IN VAC BRKR 8B07 - WATTS EDP# 0061992 (S06-E45)	8B07 / 61992	$ -	7	$ -
15	592	NIPPLE 3/4xCL TBE BRASS - 2012-001 (S06-E26)	2012-001	$ -	112	$ -
16	593	NIPPLE 1IN X CL BRASS - 2016-001 (S06-E23)	2016-001	$ -	41	$ -
17	594	NIPPLE 1IN x 3IN BRASS TBE - 2016-300 (S06-E22)	2016-300	$ -	1	$ -
18	595	NIPPLE 1-1/2IN x CL BRASS - 2024-001 (S06-E17)	2024-001	$ -	11	$ -
19	596	NIPPLE 1-1/2 x 3IN BRASS - 2024-300 (S06-E18)	2024-300	$ -	8	$ -
20	597	NIPPLE 2IN X CL BRASS TBE - 2032-001 (S06-E21)	2032-001	$ -	26	$ -
21	598	NIPPLE 2INx4IN TBE BRASS - 2032-400 (S06-E14)	2032-400	$ -	9	$ -
22	599	VALVE 3/4IN GATE FPT BRASS - 3407GM300 (S06-F02)	3407GM300	$ -	311	$ -
23	600	VALVE 1IN GATE FPT BRASS - 200 WOG *5 PER BX* (S06-C01)	200 WOG	$ -	1	$ -
24	601	VALVE 1-1/2IN GATE FPT BRASS - #200 WOG FPT *4 PER BX* (S06-C02)	200 WOG	$ -	5	$ -
25	602	VALVE 2IN GATE FPT BRASS - #200 WOG FPT *2 PER BX* (S06-C03)	200 WOG	$ -	1	$ -
26	603	VALVE 3/4IN HOSE BIBB BRASS - 3407HBM (S06-C11)	3407HBM	$ -	431	$ -
27	604	VALVE 1IN HOSE BIBB BRASS - #107-265/T-531 MALE (S06-C12)	107-265/T-531	$ -	1	$ -
28	605	VALVE 3/4IN STR DUAL CK BRASS - HHS31-323 FORD *8 PER BX* (S06-D22)	HHS31-323	$ -	2155	$ -
29	606	VALVE 1IN STRAIGHT DUAL CHECK - BRASS FORD#HHS31-344 (S06-D23)	HHS31-344	$ -	21	$ -
30	607	CORP 1IN STOP BRASS - CTS/PJ X TAPER MPT		$ -	1	$ -
31	610	VALVE 3/4X5/8IN ANGLE KEY - KV13-332W BRASS *12 PER BX* (S06-D28)	KV13-332W	$ -	45	$ -
32	611	VALVE 3/4X3/4IN ANGLE KEY - KV43-332WG BRASS *8 PER BX* (S06-D32)	KV43-332WG	$ -	3	$ -
33	613	VALVE 1IN ANGLE KEY BRASS - KV13-444W *5 PER BX* (S06-D26)	KV13-444W	$ -	32	$ -
34	614	VALVE 1X1IN ANGLE KEY - BRASS P/N-KV43-444WG *5 PER BX* (S06-D27)	KV43-444WG	$ -	2	$ -
35	615	COUPLING 3/4IN COMP/SINGLE - C84-33G MPJxCTS/PJ BR 24 bx (S06-D15)	C84-33G	$ -	7	$ -
36	616	COUPLING 1IN COMP/SINGLE BRASS C84-44G MPTxCTS/PJ 14 PER BX (S06-D17)	C84-44G	$ -	44	$ -
37	618	COUPLING 3/4IN DOUBLE COMP - CTS/PJ #C44-33 BRASS	C44-33G	$ -	1	$ -
38	620	COUPLING 2IN COMP DBL GRIP/JNT - BRASS #C44-77G FORD (S06-D09)	C44-77G	$ -	2	$ -
39	623	SCREW OIL FOR OPERATING NUT STANDARD TRAFFIC 190703 (B02-28)	190703	$ -	2	$ -
40	626	METER COUPLING 3/4IN BRASS - PLUMBERS PIECES (S06-C17)		$ -	75	$ -
41	627	METER COUPLING 1 IN BRASS - PLUMBERS PIECE (S06-C18)		$ -	35	$ -
42	629	TEE 1IN BRASS FPT (S06-C19)		$ -	13	$ -
43	630	ELL 90 2IN ST FxMPT BRASS - 30209E (S06-C23)	30209E	$ -	3	$ -
44	631	REDUCER 1X3/4IN BRASS FXM/THD - MUELLER/METER (S06-E31)		$ -	36	$ -
45	633	REDUCER 1-1/2 X 1IN MPTxFPT - BRASS (S06-E30)		$ -	118	$ -
46	634	REDUCER 2-1/2IN x 2IN MxF - BRASS BUSHING (S06-E33)		$ -	5	$ -
47	635	ADAPTER HYD 2 1/2" X 2" BRASS - MNST (S06-B38)		$ -	25	$ -
48	636	ADAPTER HYD 2 1/2" x 3/4" BRASS - FNST X MIPT (S06-B34)		$ -	3	$ -
49	637	ADAPTER HYD 2 1/2" X 1" BRASS (S06-B35)		$ -	3	$ -
50	638	ADAPTER HYD 2 1/2" x 1 1/2" - BRASS (S06-B36)		$ -	1	$ -
51	639	ADAPTER HYD 2 1/2" X 2" BRASS FXM (S06-B37)		$ -	3	$ -
52	644	HOSE NOZZLE 2 1/2" BRASS AMLOK 84-20-3 (S06-B31)	84-20-3	$ -	1	$ -
53	651	RESETTER COPPER 5/8 x 3/4 x 7 - V42-7W (S06-F03)	V42-7W	$ -	114	$ -
54	652	RESETTER COPPER 5/8 x 3/4 x 9 - V42-9W FORD (S06-F04)	V42-9W	$ -	23	$ -
55	653	RESETTER COPPER 5/8 X 3/4 X 12 V42-12W (S06-F06)	V42-12W	$ -	18	$ -
56	654	RESETTER COPPER 1 X 10IN - FORD V44-10W (S07-E13)	V44-10W	$ -	1	$ -
57	655	RESETTER COPPER 1 X 12IN - FORD V44-12W (S07-E14)	V44-12W	$ -	1	$ -
58	1198	NIPPLE 1/4" X 2" BRASS 2271-419 (S06-C38)	2271-419	$ -	3	$ -
59	1307	BALL 2IN CURB STOP FXF BRASS - B11-77W FORD *2 PER BX* (S06-E43)	B11-77W	$ -	4	$ -
60	1377	NIPPLE 1 X 36IN BRASS TBE (S06-E03)		$ -	4	$ -
61	1378	NIPPLE 1 1/2 X 36IN BRASS TBE (S06-E04)		$ -	1	$ -
62	1379	NIPPLE 2IN X 3IN BRASS TBE - 2032-300 (S06-E15)	2032-300	$ -	27	$ -
63	1380	ELL 90 DEG.3/4IN FPTxFPT BRASS - 4501-150 (S06-C27)	4501-150	$ -	1	$ -
64	1381	ELL 90 1IN FPT X FPT - BRASS (S06-C28)		$ -	11	$ -
65	1382	ELL 1-1/2IN 90 FXF - BRASS (S06-C21)		$ -	1	$ -
66	1383	ELL 90 2IN FXF BRASS - 4501-400 (S06-C24)	4501-400	$ -	5	$ -
67	1572	ADAPTER METER 1 X 3/4 IN MXF - BRASS #3907A24 PER PR. (S06-E37)	3907A24	$ -	1	$ -
68	1573	REDUCER 2 X 1-1/2IN MxF BRASS - HEX BUSHING (S06-E32)		$ -	8	$ -
69	1606	REDUCER 1 X 3/4IN MPTxFPT - BRASS BUSHING (S06-E28)		$ -	69	$ -
70	1640	COUPLING 5/8 X 3/4IN METER - C31-23 Ford BRASS (S06-E36)	C31-23	$ -	2	$ -

ADDENDUM #2 - REVISED BID REPLY SPREADSHEET
E-BID #20120009

	A	B	E	G	H	I
71	**1655**	REDUCER 1 1/4X1IN MXF/THD - BRASS (S06-E29)		$ -	7	$ -
72	**1656**	NIPPLE 3/4 X 36IN BRASS TBE - 2012-3600 (S06-E02)	2012-3600	$ -	1	$ -
73	**1657**	NIPPLE 2 X 36IN BRASS TBE - 2032-3600 (S06-E01)	2032-3600	$ -	3	$ -
74	**1775**	VALVE 1/2IN BALL FPT BRASS (S06-C04)		$ -	5	$ -
75	**1776**	VALVE 1IN BALL FPT BRASS - 68-100 (S06-C06)		$ -	34	$ -
76	**1809**	REDUCER 2 x 3/4IN MxF BRASS - 3020B07020B07 (S06-E34)	3020B07020B07	$ -	8	$ -
77	**1810**	REDUCER 2x1IN MPTxFPT BRASS - 3020B10 (S06-E35)	3020B10	$ -	15	$ -
78	**1811**	ELL 90 2IN CTS/PJ X CTS/PJ - L44-77 BRASS (S06-D06)	L44-77	$ -	4	$ -
79	**1812**	VALVE 2IN ANGLE MTR STOP FxFLG - FORD #BFA13-777W *2 PER BX* (S06-E42)	BFA13-777W	$ -	4	$ -
80	**1830**	TEE 2IN FPT BRASS (S06-C20)		$ -	7	$ -
81	**2054**	MARKER BRASS - FOR 2" WATER VALVE (S10-D23)		$ -	1	$ -
82	**2055**	VALVE 3/4X1IN ANGLE BRASS - KV13-342W *10 PER BX* (S06-D30)	KV13-342W	$ -	36	$ -
83	**2056**	ADAPTER HYD 2 1/2" X 2" BRASS (S06-B32)		$ -	1	$ -
84	**2091**	COUPLING 2IN FPT x FPT BRASS - 4540-400 flagg (S06-C16)	4540-400	$ -	13	$ -
85	**2459**	CROSS 2IN FPT BRASS (S06-C22)		$ -	1	$ -
86	**2667**	CAP 1-1/4IN THREADED BRASS (S06-C29)		$ -	1	$ -
87	**2668**	ELL 90 3/4IN STREET FxM BRASS - X103-12 (S06-C25)	X103-12	$ -	2	$ -
88	**2669**	ELL 90 1IN STREET FPTxMPT BRAS - X103-16 (S06-C26)	X103-16	$ -	9	$ -
89	**2755**	NUT & 1IN GASKET ASSEMBLY GRIP NUT - BRASS (S06-C34)		$ -	1	$ -
90	**2756**	NUT & 1IN GASKET ASSEMBLY GRIP NUT GJCN4-4 - BRASS (S06-C35)	GJCN4-4	$ -	51	$ -
91	**2762**	VALVE 2IN BALL FPT BRASS - 3420BM200 *2 PER BX* (S06-C08)	3420BM200	$ -	15	$ -
92	**2907**	VALVE 3/4IN BALL FPT BRASS - 3407BM200 (S06-C05)	3407BM200	$ -	131	$ -
93	**3022**	NIPPLE 3/4 X 3IN BRASS (S06-E27)		$ -	25	$ -
94	**3112**	UNION 3/4IN FPT BRASS (S06-C30)		$ -	1	$ -
95	**3113**	UNION 1IN FPT BRASS (S06-C31)		$ -	1	$ -
96	**3126**	UNION 1 1/2IN FPT - BRASS (S06-C32)		$ -	1	$ -
97	**3127**	UNION 2IN 3/PC FPT BRASS - 3020U (S06-C33)	3020U	$ -	1	$ -
98	**3481**	VALVE 1 X 3/4IN STRAIGHT BALL 5/BX- B43-342WG (S06-D29)	B43-342WG	$ -	2	$ -
99	**3484**	VALVE 1X1IN STRAIGHT BALL - BRASS (S06-D31)		$ -	1	$ -
100	**3978**	VALVE 1-1/2IN BALL FPT BRASS 3415BM200 (S06-C07)	3415BM200	$ -	47	$ -
101	**4039**	VALVE 4IN GATE BRASS FPT #300 PART #3440GM300 (S06-C10)	3440GM300	$ -	1	$ -
102	**5325**	COUPLING 1IN DOUBLE COMP BRASS - C44-44G CTS GRIP *12 PER BX* (S06-D20)	C44-44G	$ -	152	$ -
103	**5380**	COUPLING 2IN GRIP/JOINT BRASS - C84-77G MPTxCTS/GJ (S06-D18)	C84-77G	$ -	16	$ -
104	**5381**	ELL 90 1IN COMP.GRIP BRASS - L44-44G FORD *8 PER BX* (S06-D21)	L44-44G	$ -	129	$ -
105	**5383**	VALVE 3/4x1IN ANGLE U-BRANCH - UV-43-42-WG FORD *8 PER BX* (S06-F01)	UV-43-42-WG	$ -	464	$ -
106	**5384**	CORP STOP 1IN BRASS MPTxCTS/G - F1100-4G FORD *6 PER BX* (S06-D24)	F1100-4G	$ -	386	$ -
107	**5389**	COUPLING 1-1/2IN FPTxFPT BRASS - 30155 (S06-C15)	30155	$ -	3	$ -
108	**5390**	VALVE ANGLE 3/4 x 1IN BRASS - KV43-342WG GRIP JNT (S06-D25)	KV43-342WG	$ -	315	$ -
109	**5403**	VALVE 3IN GATE BRASS FPT - FIG. M300 (S06-C09)	M300	$ -	1	$ -
110	**5406**	BALL 1-1/2IN CURB STOP FPTxFPT - BRASS FORD B11-666W *2 PER BX* (S06-D10)	B11-666W	$ -	1	$ -
111	**5429**	NUT ASSEM 1IN/FORD GRIP JOINTS - GJN4-4 (S06-B26)	GJN4-4	$ -	1	$ -
112	**5430**	NUT ASSEM 2IN/FORD GRIP JOINTS - GJN4-7 (S06-B25)	GJN4-7	$ -	1	$ -
113	**5471**	COUPLING 3/4IN DBL COMP BRASS GRIP/JOINT C44-33G 14/BX (S06-D19)	C44-33G	$ -	3	$ -
114	**5476**	COUPLING 3/4IN FPT x FPT - BRASS (S06-C13)		$ -	14	$ -
115	**5477**	COUPLING 1IN FPT x FPT BRASS (S06-C14)		$ -	9	$ -
116	**5479**	NIPPLE 1IN X 6IN TBE BRASS (S06-E19)		$ -	14	$ -
117	**5588**	NIPPLE 3/4 IN X 6 IN BRASS TBE (S06-E24)		$ -	4	$ -
118	**5589**	NIPPLE 1 IN X 4 IN BRASS TBE (S06-E20)		$ -	12	$ -
119	**5590**	NIPPLE 3/4 IN X 4 IN BRASS TBE (S06-E25)		$ -	4	$ -
120	**5677**	NIPPLE 2IN X 6IN BRASS TBE (S06-E16)		$ -	14	$ -
121	**5748**	VALVE SWING CHECK 2" BRASS M31 2 PER BX (S06-C36)	M31	$ -	11	$ -
122	**5771**	ELL 90 3/4IN COMP GRIP BRASS L44-33G (S06-D16)	L44-33G	$ -	1	$ -
123	**5802**	VALVE 3/4IN X 3/4IN BALL CURB - FORD #B43-332W-G *5 PER BX* (S06-D11)	B43-332W-G	$ -	21	$ -
124	**5898**	NIPPLE 3/4 x 12IN BRASS (S06-E05)		$ -	1	$ -
125	**5899**	NIPPLE 3/4 x 18IN BRASS (S06-E07)		$ -	1	$ -
126	**5900**	NIPPLE 3/4 x 24IN BRASS (S06-E09)		$ -	2	$ -
127	**5901**	NIPPLE 1 x 12IN BRASS (S06-E06)		$ -	4	$ -
128	**5902**	NIPPLE 1 x 18IN BRASS (S06-E08)		$ -	1	$ -
129	**5903**	NIPPLE 1 x 24IN BRASS (S06-E11)		$ -	2	$ -
130	**5904**	NIPPLE 2 x 12IN BRASS (S06-E10)		$ -	2	$ -
131	**5905**	NIPPLE 2 x18IN BRASS (S06-E13)		$ -	2	$ -
132	**5906**	NIPPLE 2 x 24IN BRASS (S06-E12)		$ -	1	$ -
133	**5918**	VALVE 1 1/2 IN FPT x FPT - 2621-015 (S05-D03)	2621-015	$ -	2	$ -
134	**5927**	COPR STOP 3/4 IN BRASS - 3/4 IN F1100-3-G *10 PER BX* (S06-D14)	F1100-3-G	$ -	1	$ -
135	**5983**	COUPLING COMP. 1 1/2" BRASS C44-66G (S06-D08)	C44-66G	$ -	1	$ -
136	**5984**	MALE ADPT. COMP. 1 1/2" BRASS C84-66G (S06-D07)	C84-66G	$ -	1	$ -
137	**6015**	VALVE 1 1/2 CHECK SINGLE HS11-666 *4 PER BX* (S06-E44)	HS11-666	$ -	1	$ -
138	**6031**	MARKER BRASS - FOR 2" SEWER F/M (S10-D11)		$ -	1	$ -
139	**6070**	VALVE BALL METER B13-332W 3/4x1 *6 PER BX* (S06-D13)	B13-332W	$ -	11	$ -
140	**6071**	VALVE BALL METER B13-344W 3/4x1 *5 PER BX* (S06-D12)	B13-344W	$ -	1	$ -
141	**6072**	MARKER BRASS - FOR 4" WATER VALVE (S10-D12)		$ -	2	$ -
142	**6074**	MARKER BRASS - FOR 6" WATER VALVE (S10-D13)		$ -	1	$ -
143	**6075**	MARKER BRASS - FOR 8" WATER VALVE (S10-D14)		$ -	1	$ -
144	**6076**	MARKER BRASS - FOR 10" WATER VALVE (S10-D15)		$ -	1	$ -

	A	B	E	G	H	I
145	6077	MARKER BRASS - FOR 12" WATER VALVE (S10-D16)		$ -	1	$ -
146	6078	MARKER BRASS - FOR 16" WATER VALVE (S10-D17)		$ -	1	$ -
147	6079	MARKER BRASS - FOR 20" WATER VALVE (S10-D18)		$ -	1	$ -
148	6080	MARKER BRASS - FOR 24" WATER VALVE (S10-D19)		$ -	1	$ -
149	6081	MARKER BRASS - FOR 30" WATER VALVE (S10-D20)		$ -	1	$ -
150	6082	MARKER BRASS - FOR 36" WATER VALVE (S10-D21)		$ -	1	$ -
151	6083	MARKER BRASS - FOR 42" WATER VALVE (S10-D22)		$ -	1	$ -
152		**2. SUBTOTAL**				**$ -**
153		**3. D/I PARTS, ALL TYPES AMERICAN OR APPROVED EQUAL**				
154	628	CLEAN OUT 4IN C/I W/BRASS PLUG (S06-B08)		$ -	1	$ -
155	680	GASKET 12IN FIELD LOCK (S08-A01)		$ -	1	$ -
156	734	MEGALUG 10 IN FOR D/I PIPE (S11-D21)		$ -	1	$ -
157	834	RISER 1IN VALVE BOX - 59VR010I (S09-D17)	59VR010I	$ -	44	$ -
158	835	RISER 2IN VALVE BOX - 59VR020I (S09-D18)	59VR020I	$ -	63	$ -
159	836	RISER 3IN VALVE BOX - 59VR030I (S09-D19)	59VR030I	$ -	49	$ -
160	837	RISER 4IN VALVE BOX - 59VR040I (S09-D20)	59VR040I	$ -	36	$ -
161	868	GASKET RUBBER 7.25-7.65 F/STEEL COUPLING (S10-A23)		$ -	1	$ -
162	869	GASKET 9.40-9.74 STEEL COUPLIN - FORD PN=20377 (S10-A24)	20377	$ -	1	$ -
163	870	GASKET RUBBER 9.46-9.85 F/STEEL COUPLING (S10-A25)		$ -	1	$ -
164	871	GASKET RUBBER 6.63 F/STEEL COUPLING (S10-A26)		$ -	1	$ -
165	872	GASKET RUBBER 8.60-9.06 F/STEEL COUPLING (S10-A27)		$ -	1	$ -
166	873	GASKET RUBBER F/STEEL COUPLING - PN=33813 (S10-A28)	33813	$ -	1	$ -
167	874	GASKET RUBBER 11.90-12.20 - F/STEEL COUPLING (S10-A29)		$ -	1	$ -
168	901	KIT 3IN COMPANION FLANGE D/I (S11-B02)		$ -	1	$ -
169	902	KIT 4IN COMPANION FLANGE - DUCTILE IRON (S11-B04)		$ -	1	$ -
170	903	KIT 6IN RESTRAINER - 1300 SINGLE FLANGE (S11-A04)		$ -	1	$ -
171	904	RESTRAINER FOR 8" PVC BELL JOINT - 1390 1300 (S11-B07)		$ -	1	$ -
172	905	KIT MJ 3IN ACCESSORY (S11-B01)		$ -	1	$ -
173	906	KIT MJ 4IN ACCESSORY (S11-B03)		$ -	7	$ -
174	907	KIT MJ 6IN ACC. WITH GLAND - FLANGE/GASKET/T-BOLT (S11-B05)		$ -	1	$ -
175	908	KIT MJ 8IN ACCESSORY (S11-B08)		$ -	2	$ -
176	909	KIT MJ 10IN ACCESSORY (S11-B09)		$ -	1	$ -
177	910	KIT MJ 12IN ACCESSORY - PART #21AMMJR12 (S11-B10)	21AMMJR12	$ -	1	$ -
178	911	KIT MJ 16IN ACCESSORY (S11-B12)		$ -	1	$ -
179	912	GASKET 3IN MJ RUBBER (S11-C01)		$ -	1	$ -
180	913	GASKET 3IN RUBBER TRANSITION - PART #21AMG503 (S11-C02)	21AMG503	$ -	1	$ -
181	914	GASKET MJ 4IN RUBBER (S11-C03)		$ -	24	$ -
182	915	GASKET 4IN RUBBER TRANSITION (S11-C04)		$ -	16	$ -
183	916	GASKET 6IN MJ RUBBER - FOR D/I PIPE (S11-C05)		$ -	71	$ -
184	917	GASKET 6IN TRANSITION RUBBER - 21AMG506 (S11-C06)	21AMG506	$ -	6	$ -
185	918	GASKET MJ 8IN RUBBER (S11-C07)		$ -	24	$ -
186	919	GASKET 8IN TRANSITION RUBBER (S11-C08)		$ -	1	$ -
187	920	GASKET 10IN MJ RUBBER (S11-C09)		$ -	1	$ -
188	921	GASKET 10IN TRANSITION RUBBER (S11-C10)		$ -	1	$ -
189	922	GASKET MJ 12IN RUBBER (S11-C11)		$ -	23	$ -
190	923	GASKET 12IN TRANSITION RUBBER (S11-C12)		$ -	7	$ -
191	924	GASKET MJ 16IN RUBBER (S11-C14)		$ -	1	$ -
192	925	GASKET MJ 18IN RUBBER (S11-C15)		$ -	1	$ -
193	926	FLANGE 3IN COMPANION D/I (S11-D01)		$ -	4	$ -
194	927	FLANGE 3IN UNION (S11-D02)		$ -	2	$ -
195	928	MEGALUG 3IN FOR D/I PIPE - PART #21AMF8031103 (S11-D03)	21AMF8031103	$ -	1	$ -
196	929	MEGALUG 3IN FOR PVC PIPE (S11-D04)		$ -	1	$ -
197	930	FLANGE 4IN SPLIT (S11-D05)		$ -	1	$ -
198	931	FLANGE 4IN FEMALE THD 8 HOLE - 2404FCCS STEEL (S11-D06)	2404FCCS	$ -	1	$ -
199	932	FLANGE 4 IN UNION - PART #2404FU (S11-D07)	2404FU	$ -	4	$ -
200	933	MEGALUG 4IN FOR D/I PIPE (S11-D08)		$ -	5	$ -
201	934	MEGALUG 4IN FOR PVC PIPE (S11-D09)		$ -	17	$ -
202	935	FLANGE 6IN FEMALE THD 8 HOLE - STEEL (S11-D10)		$ -	1	$ -
203	936	FLANGE 6IN SPLIT (S11-D11)		$ -	1	$ -
204	937	MEGALUG 6IN FOR D/I PIPE (S11-D12)		$ -	4	$ -
205	938	MEGALUG 6IN FOR PVC PIPE - 21AMF8062006PV (S11-D13)	21AMF8062006PV	$ -	26	$ -
206	939	FLANGE 6IN UNION DUCTILE IRON (S11-D14)		$ -	1	$ -
207	940	FLANGE 8IN UNION (S11-D15)		$ -	1	$ -
208	941	MEGALUG 8IN FOR D/I PIPE (S11-D16)		$ -	2	$ -
209	942	MEGALUG 8IN FOR PVC PIPE (S11-D17)		$ -	24	$ -
210	943	RING 8IN SPLIT 1300 (S11-D18)	1300	$ -	1	$ -
211	944	FLANGE 10 IN UNION (S11-D19)		$ -	1	$ -
212	945	MEGALUG 10IN FOR PVC PIPE (S11-D20)		$ -	1	$ -
213	946	RESTRAINT 12IN SPLIT 1300C (S11-B11)	1300C	$ -	1	$ -
214	947	MEGALUG 12IN FOR D/I PIPE (S11-E02)		$ -	1	$ -
215	948	FLANGE 12 IN UNION (S11-E03)		$ -	1	$ -
216	949	MEGALUG 12IN FOR PVC PIPE (S11-E01)		$ -	32	$ -
217	950	MEGALUG 16IN FOR D/I PIPE (S11-E04)		$ -	1	$ -
218	951	MEGALUG 16IN FOR PVC PIPE (S11-E05)		$ -	1	$ -

ADDENDUM #2 - REVISED BID REPLY SPREADSHEET
E-BID #20120009

	A	B	E	G	H	I
219	952	FLANGE 16IN UNION (S11-E06)		$ -	1	$ -
220	953	MEGALUG 18IN FOR D/I PIPE (S11-E07)		$ -	1	$ -
221	954	MEGALUG 18IN FOR PVC PIPE (S11-E08)		$ -	1	$ -
222	955	FLANGE 18IN UNION-400C (S11-E09)	400C	$ -	1	$ -
223	956	FLANGE 20IN UNION-400C (S11-E10)	400C	$ -	2	$ -
224	957	MEGALUG 20IN FOR PVC PIPE (S11-E11)		$ -	1	$ -
225	996	BOLT 5/8 X 3IN T-HEAD & NUT 120 b/x (S12-E14)		$ -	4	$ -
226	997	BOLT 3/4 X 4IN T-HEAD & NUT - NON-ROTATING (S12-E16)		$ -	24	$ -
227	998	BOLT 3/4 X 4IN T-HEAD - 60 PER BOX (S12-E17)		$ -	276	$ -
228	999	BOLT 3/4 X 4-1/2IN T-HEAD - & NUT (S12-E18)		$ -	73	$ -
229	1000	BOLT 3/4 X 4-1/2IN T-HEAD &NUT - NON ROTATING (S12-E19)		$ -	1	$ -
230	1001	BOLT 3/4 X 5IN T-HEAD & NUT (S12-E20)		$ -	52	$ -
231	1002	EYEBOLT 3/4IN ANGLED *DUC-LUG* (S12-E21)		$ -	8	$ -
232	1194	BEND 90 3IN FLANGED DI - PART #24039F (YD-67)	24039F	$ -	1	$ -
233	1195	FLANGE 3IN MJ DI (YD-68)		$ -	1	$ -
234	1196	CAP 3IN MJ DI (YD- 70)		$ -	1	$ -
235	1197	BEND 45 3IN MJ DI (YD-69)		$ -	1	$ -
236	1199	SLEEVE 3 x 12IN MJ DI (YD-64)		$ -	1	$ -
237	1200	BEND 45 4IN FLANGED DI (YD-62)		$ -	1	$ -
238	1201	BEND 90 4IN FLANGED DI C/L C110 (YD-63)		$ -	1	$ -
239	1202	PLUG 4IN MJ DI (YD-60)		$ -	1	$ -
240	1203	CAP 4IN MJ DI (YD-61)		$ -	1	$ -
241	1204	FLANGE 4IN MJ DI (YD-58)		$ -	7	$ -
242	1205	BEND 45 4IN MJ DI (YD-59)		$ -	1	$ -
243	1206	BEND 90 4IN MJ DI (YD-56)		$ -	1	$ -
244	1207	FLANGE 4IN WELD NECK - R.F. #150 B-16-A105 (S09-A03)	150 B-16-A105	$ -	1	$ -
245	1208	SLEEVE 4 x 12IN MJ DI - NOT COATED (YD-53)		$ -	6	$ -
246	1209	CAP 6IN MJ DI (YD-50)		$ -	1	$ -
247	1210	PLUG 6IN MJ DI (YD-51)		$ -	1	$ -
248	1211	FLANGE 6IN UNI-FLANGE - TWO HOLE FOR DI (YD-52)		$ -	1	$ -
249	1212	FLANGE 6IN MJ DI (YD-49)		$ -	11	$ -
250	1213	BEND 45 6IN FLANGED DI (YD-48)		$ -	1	$ -
251	1214	BEND 45 6IN MJ DI (YD-47)		$ -	1	$ -
252	1215	BEND 90 6IN FLANGED DI - EPOXY LINED	EPOXY LINED	$ -	1	$ -
253	1216	BEND 90 6IN MJ X SPIGOT DI (YD-45)		$ -	1	$ -
254	1217	BEND 90 6IN MJ DI CEMENT LINED YD-44)	CEMENT LINED	$ -	1	$ -
255	1218	SLEEVE 6 X 12IN MJ DI - CEMENT LINED (YD-43)	CEMENT LINED	$ -	12	$ -
256	1219	TEE 6 X 6 X 6 MJ DI (YD-41)		$ -	1	$ -
257	1220	FLANGE 8 IN MJ DI (YD-40)		$ -	1	$ -
258	1221	CAP 8IN MJ DI - 2108CT (YD-39)		$ -	1	$ -
259	1222	BEND 45 8 IN MJ DI CEMENT LINED (YD-38)	CEMENT LINED	$ -	1	$ -
260	1223	SLEEVE 8 X 12 MJ DI (YD-37)		$ -	6	$ -
261	1224	FLANGE 10 IN MJ DI (YD-36)		$ -	1	$ -
262	1225	BEND 45 10 IN MJ DI (YD-35)		$ -	1	$ -
263	1226	SLEEVE 10 X 12 IN MJ DI (YD-34)		$ -	1	$ -
264	1227	FLANGE 12 IN MJ DI (YD-33)		$ -	1	$ -
265	1228	CAP 12 IN MJ DI (YD-32)		$ -	4	$ -
266	1229	BEND 45 12IN MJ DI CEMENT LINED (YD-31)	CEMENT LINED	$ -	1	$ -
267	1230	SLEEVE 12IN X 12IN MJ DI (YD-30)		$ -	11	$ -
268	1232	BEND 90 12 IN FLANGED DI (YD-28)		$ -	1	$ -
269	1233	FLANGE 16 IN MJ DI (YD-27)		$ -	1	$ -
270	1234	SLEEVE 16 X 15 IN MJ DI (YD-26)		$ -	1	$ -
271	1235	FLANGE 18 IN MJ DI (YD-25)		$ -	1	$ -
272	1236	SLEEVE 18 X 15 IN MJ DI (YD-23)		$ -	1	$ -
273	1237	FLANGE 20 IN MJ DI (YD-21)		$ -	1	$ -
274	1238	SLEEVE 20 X 15 IN MJ DI (YD-20)		$ -	1	$ -
275	1239	LID WATER LOCKING (YD-74)		$ -	11	$ -
276	1240	LID SEWER VALVE BOX LOCKING (YD-71)		$ -	2	$ -
277	1241	LID WATER NON LOCKING - 5-1/4IN (YD-75)		$ -	85	$ -
278	1242	VALVE BOX TOP DI 461S (YD-73)	461S	$ -	13	$ -
279	1244	VALVE BOX TOP & BOTTOM - 461-S LESS LID (YD-76)	461-S	$ -	61	$ -
280	1254	REDUCER 6 X 4 IN MJ DI (YD-11)		$ -	1	$ -
281	1255	REDUCER 8 X 6 IN MJ DI (YD-12)		$ -	1	$ -
282	1256	TEE 6 X 6 X 4 IN MJ DI CEMENT LINED (YD-22)	CEMENT LINED	$ -	1	$ -
283	1397	WYE 2-1/2IN X 2-1/2IN PUSH ON - EPOXY COATED FOR D/I (S09-A02)	EPOXY COATED	$ -	1	$ -
284	2498	TEE 4 X 4 X 4 IN MJ DI (YD-57)		$ -	1	$ -
285	2502	BEND 11-1/4 3 IN MJ CP DI (YD-66)		$ -	1	$ -
286	2503	BEND 11-1/4 4 IN MJ CP DI C153 (YD-55)		$ -	1	$ -
287	2504	BEND 22-1/2 3 IN CP DI C153 (YD-65)		$ -	1	$ -
288	2505	BEND 22-1/2 4IN MJ CP DI C153 (YD-54)		$ -	1	$ -
289	2805	BOLT 3/4 X 3-1/2IN T-HEAD & - NUT *85 PER BX* (S12-E15)		$ -	517	$ -
290	2814	BEND 90 12IN MJ DI - 21129M (YD-29)	21129M	$ -	1	$ -
291	2815	LID SEWER NON LOCKING (YD-72)		$ -	8	$ -
292	5021	FLANGE 8 IN BLIND D/I - 8 HOLE		$ -	1	$ -

ADDENDUM #2 - REVISED BID REPLY SPREADSHEET
E-BID #20120009

	A	B	E	G	H	I
293	5388	ELL 45 DEG. 4IN GALV FPTxFPT		$ -	1	$ -
294	5462	EXTENSION 6FT VALVE STEM - PART #65VSE060C	65VSE060C	$ -	1	$ -
295	5642	ELL 45 12IN MJ DI		$ -	1	$ -
296	5643	KIT 12IN MEGALUG ACCESSORY - FOR PVC		$ -	1	$ -
297	5772	SLEEVE 12 X 6IN TAPPING D/I - OD 13.20-13.50		$ -	1	$ -
298	5781	TEE 3 x 3 x 3IN FLANGED D/I - PART #2403T030F	2403T030F	$ -	1	$ -
299	5782	TEE 3 x 3 x 2IN FLANGED D/I - BRANCH IS 2IN		$ -	1	$ -
300	5783	FLANGE 2 IN COMPANION - WITH 2IN FIPT		$ -	1	$ -
301	5784	SLEEVE 3IN X 12IN FLANGED - D/I SPOOL PIECE		$ -	1	$ -
302	5786	TEE 3 x 3 x 3IN MJ D/I - PART #2103T030M	2103T030M	$ -	1	$ -
303	5787	CAP 3IN MJ TAPPED W/2IN IPT - DUCTILE IRON		$ -	1	$ -
304	5788	REDUCER 6x4 DI EPOXY LINED - PART #2406R04FE	2406R04FE	$ -	1	$ -
305	5791	CROSS 6IN D/I EPOXY LINED - FLANGED #2406X060FE	2406X060FE	$ -	1	$ -
306	5792	FLANGE 6x4 REDUCING COMPANION - THRD D/I #2406FC40S	2406FC40S	$ -	1	$ -
307	5804	TEE 8IN FLANGED DUCTILE IRON		$ -	1	$ -
308	5805	TEE 6IN FLANGED DUCTILE IRON		$ -	1	$ -
309	5808	BEND 6IN 90 DEG D/I FLANGED - NOT LINED (YD-46)		$ -	4	$ -
310	5822	TEE 8 x 8 x 6IN DUCTILE IRON - FLANGED CEMENT LINED		$ -	1	$ -
311	5828	CAP 16IN DUCTILE IRON MJ - W/2" CENTER TH TAP (YD-24)		$ -	1	$ -
312	5842	CROSS 4IN DI EPOXY LINE FLANGD - PART #2404X040FE	2404X040FE	$ -	1	$ -
313	5860	FLANGE 12 IN BELL - 073019 for C-900 (S07-E09)		$ -	1	$ -
314	5868	RESTRAINT FOR 6in P.V.C. - 1390-C - 2 FLANGES (S11-B06)	1390-C	$ -	1	$ -
315	5938	GASKET 20" MJ (S11-C16)		$ -	1	$ -
316	5939	GASKET 24" MJ (S11-C17)		$ -	1	$ -
317	5977	TEE 8 X 8 X 6 MJ DI CEMENT LINED (ORDER ON REQUEST)		$ -	1	$ -
318	6019	TEE 24" EPOXY MJ (YD-14)		$ -	1	$ -
319	6020	SLEEVE 24" EPOXY MJ (YD-18)		$ -	1	$ -
320	6021	SLEEVE 12" EPOXY MJ (YD-42)		$ -	1	$ -
321	6022	MEGALUG 24IN FOR PVC PIPE (S10-E02)		$ -	1	$ -
322	6023	GASKET 24" MJ (S11-C18) SEE PART # 5939		$ -	1	$ -
323	6105	SLEEVE 6 X 12" MJ DI EPOXY COATED (YD-04)	EPOXY COATED	$ -	1	$ -
324		**3. SUBTOTAL**				**$ -**
325		**4. DUCTILE IRON PIPE / McWANE OR APPROVED EQUAL**				
326	1185	PIPE 3IN DI C/51 CEMENT LINED (PR4-A01)	C/51 CEMENT LINED	$ -	1	$ -
327	1186	PIPE 4IN DI C/51 CEMENT LINED (PR4-A02)	C/51 CEMENT LINED	$ -	5	$ -
328	1187	PIPE 6IN D/I CEMENT LINED - CLASS 51 (PR4-C01)	C/51 CEMENT LINED	$ -	1	$ -
329	1188	PIPE 8IN DI C/51 CEMENT LINED (PR3-A01)	C/51 CEMENT LINED	$ -	1	$ -
330	2099	PIPE 10IN CLASS 51 EPOXY LINED - DI (PR3-C02)	C/51 EPOXY LINED	$ -	1	$ -
331	2100	PIPE 10IN CLASS 51 CEMENT LINE - DI (PR3-C01)	C/51 CEMENT LINED	$ -	1	$ -
332	2101	PIPE 12IN CLASS 51 EPOXY LINED - DI (PR3-D01)	C/51 EPOXY LINED	$ -	1	$ -
333	2102	PIPE 12IN CLASS 51 CEMENT LINE - DI (PR3-E01)	C/51 CEMENT LINED	$ -	1	$ -
334	2103	PIPE 16IN CLASS 51 EPOXY LINED - DI (YDP-03)	C/51 EPOXY LINED	$ -	1	$ -
335	2104	PIPE 16IN CLASS 51 CEMENT LINE - DI (YDP-01)	C/51 CEMENT LINED	$ -	1	$ -
336	2105	PIPE 20IN CLASS 51 EPOXY LINED - DI (YDP-02)	C/51 EPOXY LINED	$ -	1	$ -
337	2106	PIPE 20IN CLASS 51 CEMENT LIN - DI (YDP-04)	C/51 CEMENT LINED	$ -	1	$ -
338	2107	PIPE 18IN CLASS 51 EPOXY LINED - DI (YDP-06)	C/51 EPOXY LINED	$ -	1	$ -
339	2108	PIPE 18IN CLASS 51 CEMENT LINE - DI (YDP-05)	C/51 CEMENT LINED	$ -	1	$ -
340	2109	PIPE 24IN CLASS 51 EPOXY LINED - DI (YDP-07)	C/51 EPOXY LINED	$ -	1	$ -
341	2110	PIPE 24IN CLASS 51 CEMENT LINE - DI (YDP-08)	C/51 CEMENT LINED	$ -	1	$ -
342	5775	PIPE 8IN DI EPOXY LINED	EPOXY LINED	$ -	1	$ -
343	6104	PIPE 6" CL-51 DI EPOXY LINED (PR4-B01)	CL/51 EPOXY LINED	$ -	18	$ -
344		**4. SUBTOTAL**				**$ -**
345		**5. FIRE HYDRANT & PARTS**				
346	131	COUPLING SAFETY STEM MUELLER 158259 - A-25 HYD PART (B02-01)	158259	$ -	5	$ -
347	132	NOZZLE LOCK 5 1/4 FIRE HYD (B02-14) 143137 A13	143137	$ -	5	$ -
348	133	PIN 3/32 X 1IN COTTER F/MUEL HYD - A29/195235 (B02-04)	A29/195235	$ -	37	$ -
349	134	PIN CLEVIS MUELLER HYD. A30 / 195234 (B02-03) 4 1/2" & 5 1/4"	195234	$ -	4	$ -
350	135	O-RING PUMPER NOZZLE A16 1988 - MULLER HYD. 5 1/4 (B02-07)	A16	$ -	1	$ -
351	136	O-RING BOTTOM SEAT MUELLER HYD. 4 1/2" A44 / 195161 (B02-06)	195161	$ -	1	$ -
352	137	O-RING BOTTOM SEAT MUELLER HYD. 5 1/4" A44 / 142893 (B02-05)	142893	$ -	1	$ -
353	138	O-RING M&H 5 1/4 1987 HYD A36 - 2-1/4 X 2-5/8 X 3/16 (B02-08)	A36	$ -	2	$ -
354	139	O-RING 4-1/2" & 5 1/4" T MUELLER HYD - A414 / 195271 (B02-09)	195271	$ -	23	$ -
355	140	O-RING HOLD DOWN NUT A3 / 194898 MUELLER 4 1/2" & 5 1/4"(B02-10)	194898	$ -	24	$ -
356	141	O-RING BONNET A5 / 142779 CENTURION, 4 1/2" & 5 1/4"(B02-16)	142779	$ -	54	$ -
357	142	WASHER ANTI-FRICTION A6 / 195546 CENTURION 4 1/2" & 5 1/4"(B02-15)	195546	$ -	6	$ -
358	143	GASKET 5-1/4 1988 MUELLER HYD A15 192345 CENTURION (S06-B44)	192345	$ -	11	$ -
359	144	HOOK S FOR HYD. 147738 (S06-B23)	147738	$ -	51	$ -
360	145	PLUG OIL BRASS A7 / 194932 4 1/2" & 5 1/4" (B02-12)	194932	$ -	2	$ -
361	171	O-RING 5 1/4 HYD HOUSING COVER B84B / 84-2-1 (B02-22)	B84B / 84-2-1	$ -	1	$ -
362	172	GASKET 5 1/4 HYD.HOUSING COVER B84B / 84-13 SEE PID# 622	B84B / 84-13	$ -	1	$ -
363	332	DIFFUSER 2 1/2 IN FOR HYDRANT - POLLARD P67501-100 (B13-A01)	P67501-100	$ -	1	$ -
364	548	OIL HYDRANT LUBE 1 GAL. - #51 (S15-A02)		$ -	6	$ -
365	573	OPERATING NUT 146430 4 1/2&5 1/4 SUPR CENTURION 1987 OR LATER (S06-B11)	146430	$ -	1	$ -
366	574	OPERATING NUT / BRASS - 4 1/2 & 5 1/4 CHATTANOOGA ST 175001 (S06-B14)	175001	$ -	1	$ -

ADDENDUM #2 - REVISED BID REPLY SPREADSHEET
E-BID #20120009

	A	B	E	G	H	I
367	576	PIN & COTTER PIN F/ROD/COUP - F/AMER/DARL HYD		$ -	1	$ -
368	577	COUPLING ROD BREAKABLE 5-1/4 - AMER DAR HYD B84B HRP-3009 (S06-B18)	B84B HRP-3009	$ -	1	$ -
369	579	OPERATING NUT 4-1/2 WEATHR CAP - CLOW EDDY 1977 (S06-B19)		$ -	1	$ -
370	580	CAP PUMPER NOZZLE - 5 1/4 MUELLER C/I (S06-B21)		$ -	1	$ -
371	581	SCREW OIL FOR HOLD DOWN NUT 4 1/2&5 1/4 STANDRD TRAFFIC 190702 (S06-B12)	190702	$ -	1	$ -
372	583	BOLT 1/2" x 3" FIRE HYDRANT - BREAK-AWAY TYPE 280049 (S06-B24)	280049	$ -	24	$ -
373	584	KIT REPAIR FOR 1989 4-1/2 M&H - HYDRANT/PART 442929 (S06-B27)	442929	$ -	1	$ -
374	585	GASKET 2-1/2IN RUBBER - HYDRANT FOR PART # 636,637,638,639 (S06-B28)		$ -	11	$ -
375	586	CHAIN & HOOK FOR 5-1/4 A-D - HYDRANT CAP		$ -	1	$ -
376	587	CAP HOSE 2-1/2" HYD AMER-DARLING 84-21 (S06-B20)	84-21	$ -	1	$ -
377	621	WEATHER SHIELD / RUBBER AMER. DARLING 84-144 5 1/4" (B02-26)	84-144	$ -	1	$ -
378	622	FIBER COVER GASKET AMER. DARLING 84-13 5 1/4" (B02-27)	84-13	$ -	4	$ -
379	640	HOLD DOWN NUT / BRASS MUELLER 107 HYD. 4", 5", 6" H-118 / 158383 (S06-B39)	158383	$ -	1	$ -
380	641	HOLD DOWN NUT 4 1/2 & 5 1/4CHATTANOOGA ST TRAFFIC (LEFT)175082 (S06-B13)	175082	$ -	1	$ -
381	642	HOSE NOZZLE 2 1/2 BRASS 4 1/2&5 1/4 CENTURION A18 STANDARD THREAD (S06-B42)	A18	$ -	1	$ -
382	643	PUMP NOZZLE 5 1/4 BRASS F/MUELLER 1988 HYD. A-14 (S06-B43)	A-14	$ -	1	$ -
383	647	ADAPTER HYD 2 1/2" X 3" SWIVEL (S06-B10)		$ -	1	$ -
384	727	HYDRANT EXTENSION 5 1/4" X 18" CLOW / MED *R1620666* (S10-D24)	R1620666	$ -	1	$ -
385	740	O-RING / SEAT 84-36-1 5 1/4" AMER. DARLING (B02-30)	84-36-1	$ -	2	$ -
386	757	VALVE / HYDRANT 84-41 5 1/4" AMER. DARLING (S06-C37)	84-41	$ -	2	$ -
387	758	O-RING / OPERATING NUT M-1/ T2400815 CLOW / MED. 5 1/4" (B02-32)	M-1/ T2400815	$ -	11	$ -
388	764	O-RING / THRUST NUT M-28 / T2400948 CLOW / MED. 5 1/4" (B02-33)	M-28 / T2400948	$ -	22	$ -
389	765	O-RING / STEM M-31 / T2401026 CLOW / MED. 5 1/4" (B02-34)	M-31 / T2401026	$ -	6	$ -
390	768	OPERATING NUT M-3 / 61CLM3 (RIGHT) CLOW / MED. 5 1/4" (S06-B09)	M-3 / 61CLM3	$ -	1	$ -
391	824	KIT SAFETY FLANGE REPAIR 4 1/2" MUELR195992 A300-00 PRE-1972 (S09-D01)	195992	$ -	1	$ -
392	825	KIT SAFETY FLANGE 5 1/4" MUELLER RTS A301 1972-LATER HRPI-301 (S09-D02)	HRPI-301	$ -	2	$ -
393	826	KIT SAFETY FLANGE REPAIR 4 1/2" 1977 CLOW-EDDY F.H. (S09-D03)		$ -	1	$ -
394	827	HYDRANT 6" EXTENSION KIT 4 1/2 CLOW MEDALLION R1620658 (S09-D05)	R1620658	$ -	1	$ -
395	828	HYDRANT 6" EXTENSION KIT 4 1/2 CLOW/EDDY 1977 HYDRANT (S09-D06)		$ -	1	$ -
396	829	HYDRANT 12" EXTENSION KIT 4 1/2" CLOW/EDDY 1977 F.HYD (S09-D08)		$ -	1	$ -
397	830	HYDRANT 6" EXTENSION KIT 4 1/2" MUELLER STD. TRAFFIC A337 (S09-D11)	A337	$ -	2	$ -
398	831	HYDRANT 6" EXTENSION KIT 5 1/4" MUELLER SUPER FIRE HYD. HRPI-375 CENTURION IMPROVED (S09-D12)	HRPI-375	$ -	1	$ -
399	832	HYDRANT 12" EXTENSION KIT 4 1/2" 61MUA319010 / MUELLER SUPER HYD. A319 HRPI-374 CENTURION IMPROVED NEW STYLE (S09-D13)	A319 HRPI-374	$ -	2	$ -
400	833	HYDRANT 12" EXTENSION KIT 5 1/4" HRPI-375 A320-010 MUELLER SUPER FIRE HYDRANT CENTURION IMPROVED NEW STYLE (S09-D15)	HRPI-375 A320-010	$ -	1	$ -
401	1231	HYDRANT EXTENSION KIT 5 1/4" X 6" WATEROUS PACER WB AMER. DARLING (S09-D16)		$ -	1	$ -
402	1264	HYDRANT EXTENSION 4 1/2" X 12" (YD-19)		$ -	1	$ -
403	1265	HYDRANT GRADELOK 6" X 24" OFFSET SWIVEL JOINT (YD-08)		$ -	1	$ -
404	1266	HYDRANT EXTENSION 5 1/4" X 12" (YD-10)		$ -	1	$ -
405	1267	HYDRANT EXTENSION 4 1/2" X 18" STD TRAFFIC A337 (YD-07)	A337	$ -	1	$ -
406	1269	OFF-SET 6 X 18 IN MJ (YD-06)		$ -	1	$ -
407	1270	HYDRANT ADAPTER 6" X 13" SWIVEL SOLID MJ (YD-13)		$ -	11	$ -
408	1271	ELL-SWIVEL 90 6" X 13" MJ X HYD - D/I (YD-09)		$ -	1	$ -
409	1650	O-RING BONNET CLOW 5 1/4" HYD. 442 / M32 & M-47 (S06-B30)	M32 & M-47	$ -	1	$ -
410	1651	O-RING RUBBER CLOW 5 1/4" HYD. 444 / M-53 T2401040 (S06-B29)	T2401040	$ -	1	$ -
411	2169	KIT REPAIR 4 1/2" MAIN VALVE R1620654 / CLOW MED (S09-C08)	R1620654	$ -	1	$ -
412	2170	KIT REPAIR 5 1/4" MAIN VALVE 1620655 CLOW MED. (S09-C09)	R1620655	$ -	66	$ -
413	2496	KIT REPAIR 5 1/4" FIRE HYD. - AMER DARLING B84B HRPI-473-584 (S09-D04)	B84B HRPI-473-584	$ -	1	$ -
414	2683	HYDRANT 12" EXTENSION KIT 5 1/4" CLOW MEDALLION HRPI-475 R1620665 (S09-D09)	R1620665	$ -	4	$ -
415	2692	HYDRANT 12" EXTENSION KIT 4 1/2" MUELLER SUPER A337 / 61MUA337010 STANDARD TRAFFIC IMPROVED NEW STYLE (S09-D14)		$ -	5	$ -
416	3269	FIRE HYD 4 1/2" MUELLER W 42 B - 604426M3A421	604426M3A421	$ -	1	$ -
417	3465	HYDRANT 12" EXTENSION KIT 4-1/2 MK73 AM DARLING 5-1/2 B84-B (S09-D07)	B84-B	$ -	1	$ -
418	3521	PIN COTTER SS 3/32" X 1" T0400980 CLOW HYD.	T0400980	$ -	1	$ -
419	3522	PIN SS 4 1/2" & 5 1/4" CLOW HYD. T0400891 (B02-11)	T0400891	$ -	11	$ -
420	3523	COUPLING MEDALN 4 1/2" & 5 1/4" (B02-13) M2202349	M2202349	$ -	1	$ -
421	3692	KIT REPAIR SAFETY FLANGE 5 1/4" CLOW MED. R1620653 (S09-C10)	R1620653	$ -	2	$ -
422	3801	MAIN VALVE RING 4 1/2" RUBBER MUELLER H-88 IMPROVED / 195800 (B02-25)	195800	$ -	2	$ -
423	3921	DRAIN VALVE FACING MUELLER H-81 IMPROVED 4 1/4", 4 1/2", 5 1/4" 192447 (S06-B46)	192447	$ -	1	$ -
424	3922	MAIN VALVE 4 1/4" RUBBER H-88 IMPROVED 190435 MUELLER HYD. (S06-B45)	190435	$ -	1	$ -
425	5082	GASKET 3 1/8" OD RUBBER HYD. HOSE CAP T0600547 (S06-B40)	T0600547	$ -	49	$ -
426	5083	GASKET 5 3/4" OD RUBBER HYD. STMR CAP T0600548 (S06-B41)	T0600548	$ -	21	$ -
427	5084	STEM UPPER 5 1/4" HYDRANT - F/1987 MUELLER 42IN		$ -	1	$ -
428	5085	STEM LOWER 5 1/4" HYDRANT - F/1987 MUELLER 42IN		$ -	1	$ -
429	5128	FIRE HYD. 5 1/4" CLOW 54" BURY 605546M3 CLMED (YD-05)	605546M3	$ -	1	$ -
430	5167	FIRE HYD 5 1/4" CLOW 48" BURY 605486M3 CLMED (YD-87)	605486M3	$ -	6	$ -
431	5552	FIRE HYD. 5 1/4" CLOW RED 30" BURY		$ -	1	$ -

ADDENDUM #2 - REVISED BID REPLY SPREADSHEET
E-BID #20120009

	A	B	E	G	H	I
432	5684	HYDRANT EXTENSION KIT 12" KENNEDY HYD - MODEL K81A 5 1/4"	K81A	$ -	1	$ -
433	5779	HYDRANT EXTENSION KIT 12" KENNEDY 81A PART 61KEK81A EXT125	61KEK81A	$ -	1	$ -
434	5801	HYDRANT EXTENSION 12" 4 1/2" X 12" MUELLER A322 NON-TRAFFIC	A322	$ -	1	$ -
435	5817	CHAIN (ONLY) FOR FIRE HYDRANT CAPS - M-44 T1600709 (S06-B22)	T1600709	$ -	64	$ -
436	5831	HYDRANT 6" EXTENSION 5 1/4" VO R1620664 61CLR1620664 CLOW MEDALLION HRPI-475 (S09-D10)	R1620664	$ -	1	$ -
437	5915	FIRE HYD. 5 1/4" CLOW 60" BURY		$ -	1	$ -
438	5990	O-RING STEM 4 1/2" & 5 1/4" CENTURION A12 / 194514 (B02-02)	194514	$ -	31	$ -
439	6052	FIRE HYD. 42" 5-1/4 CLOW 2546-5B (YD-03)	2546-5B	$ -	4	$ -
440	6056	OPERATING NUT 4 1/2" & 5 1/4" CENTURION 158477 (S06-B17)	158477	$ -	1	$ -
441	6057	WEATHER CAP 4 1/2 & 5 1/4 CENTURION 142818 LEFT (S06-B16)	142818	$ -	1	$ -
442	6058	HOLD DOWN NUT / CENTURION 146501 / LEFT (S06-B15)	146501	$ -	1	$ -
443	6062	WEATHER SHIELD / RUBBER AMER. DARLING 84-144 6" (B02-19)	84-144	$ -	2	$ -
444	6063	FIBER COVER GASKET AMER. DARLING 84-13 6" (B02-20)	84-13	$ -	1	$ -
445	6087	OPERATING NUT THRUST WASHER T-020-0669 (B02-17)	T-020-0669	$ -	11	$ -
446	6089	O-RING THRUST NUT M-28 T-240-0948 (B02-18)	T-240-0948	$ -	17	$ -
447	6090	O-RINGS STEM M-31 T-240-1026 (B02-23)	T-240-1026	$ -	1	$ -
448		**5. SUBTOTAL**		$ -		**$ -**
449		**6. FLO-CONTROL HOT TAP SADDLES ONLY**				
450	741	SADDLE HOT TAP 2x1-1/2INx2IN - 3220 FLO CONTROL * 5/BX* (S05-F01)	3220 FLO CONTROL	$ -	61	$ -
451	742	SADDLE HOT TAP 2-1/2x1-1/2IN - 3225 FLO CONTROL *5/BX* (S05-F02)	3225 FLO CONTROL	$ -	128	$ -
452	743	SADDLE HOT TAP 3 x 1-1/2IN - 3230 FLO CONTROL *5 PER BX* (S05-F03)	3230 FLO CONTROL	$ -	59	$ -
453	744	SADDLE HOT TAP 4x1-1/2IN - 3240 FLO CONTROL *5 PER BX* (S05-F04)	3240 FLO CONTROL	$ -	21	$ -
454	745	SADDLE HOT TAP 6x1-1/2IN - 3260 FLO CONTROL *5 PER BX* (S05-F05)	3260 FLO CONTROL	$ -	11	$ -
455	2213	SADDLE HOT TAP 8x1-1/2-2 - FLO CTL-3280 (S0F-F08)	3280	$ -	1	$ -
456	3175	SADDLE HOT TAP 6x1-1/2-2 C-900 - 9260 FLO CONTROL (S05-F07)	9260	$ -	5	$ -
457	3176	SADDLE HOT TAP 8 x 1-1/2 C-900 - FLO CONTROL #9280	9280	$ -	1	$ -
458	5027	SADDLE HOT TAP 4 X 1 1/2IN-2 F/C-900 PIPE P/N9240 (S05-F06)	9240	$ -	1	$ -
459	5888	SADDLE WEDGE 225 - 225 WEDGE (S05-E13)	225 WEDGE	$ -	1	$ -
460	5889	SADDLE WEDGE 380 - 380 WEDGE (S05-E14)	380 WEDGE	$ -	1	$ -
461	5890	SADDLE WEDGE 480 - 480 WEDGE (S05-E15)	480 WEDGE	$ -	1	$ -
462		**6. SUBTOTAL**				**$ -**
463		**7. GENERAL ITEMS**				
464	61	SPRING FOR CLOW 3" CHECK VALVE T-120-0120 (B01-D13)	T-120-0120	$ -	4	$ -
465	76	SPRING FOR CLOW 4" CHECK VALVE T-120-0086 (B01-D14)	T-120-0086	$ -	12	$ -
466	77	SPRING FOR CLOW 6" CHECK VALVE T-120-0038 (B01-D15)	T-120-0038	$ -	2	$ -
467	326	TEFLON 8 OZ PACKING & - MOLDING COMPOUND (B08-A01)		$ -	1	$ -
468	327	LUBRICANT PIPE JOINT 2 LB - 29APLQ (B13-E02)	29APLQ	$ -	1	$ -
469	360	CEMENT PORTLAND TYPE II SKU# 169-846 (S01-D02)	SKU# 169-846	$ -	2	$ -
470	549	METER LOCKSEAL HEAD - 93280148 ALUM. SEAL (S15-A03)	93280148	$ -	3311	$ -
471	550	METER LOCK STUD X-LONG 1-1/2 - 93210142 REGULAR DIA (S15-A04)	93210142	$ -	3171	$ -
472	551	LOCK 3/4IN JONES - J-288 (S15-A05)	J-288	$ -	1	$ -
473	552	LOCK 3/4IN FOR ANGLE VALVE (S15-A06)		$ -	1	$ -
474	553	LOCK 1IN JONES		$ -	1	$ -
475	558	GASKET WASHER 3/4 x 1/16IN - RUBBER (S06-B01)		$ -	711	$ -
476	559	GASKET WASHER 3/4 x 1/8IN - RUBBER (S06-B02)		$ -	4111	$ -
477	560	WASHER-PAPER/FIBER 3/4 X 1/16 - PAPER (S06-B03)		$ -	1	$ -
478	562	GASKET WASHER 1 x 1/16IN - RUBBER (S06-B05)		$ -	1	$ -
479	563	GASKET WASHER 1 x 1/16IN - PAPER (S06-B06)		$ -	1	$ -
480	564	GASKET WASHER 1 x 1/8IN - RUBBER (S06-B07)		$ -	211	$ -
481	812	CAP 4IN DAY PVC (S09-A09)		$ -	7	$ -
482	813	CAP 6IN DAY PVC SDR26 - TEMP PIPE PLUG #2706 (S09-A10)	2706	$ -	4	$ -
483	814	PLUG TEST PNEUMATIC 4IN - 262-048 (S09-A11)	262-048	$ -	1	$ -
484	815	PLUG TEST PNEUMATIC 6IN - 262-064 (S09-A12)	262-064	$ -	1	$ -
485	816	PLUG TEST PNEUMATIC 8IN - 262-080 (S09-A13)	262-080	$ -	1	$ -
486	817	PLUG TEST PNEUMATIC 10IN - 262-110 (S09-A14)	262-110	$ -	1	$ -
487	875	GASKET RUBBER 12.75 - F/STEEL COUPLING (S10-A31)		$ -	1	$ -
488	876	GASKET RUBBER 14.21-14.40 - F/STEEL COUPLING (S10-A30)		$ -	1	$ -
489	2010	VALVE BOX SEWER WITH COVER - 75RC7635 (S07-E07)	75RC7635	$ -	1	$ -
490	2152	PRECO PLUG 5/GAL BUCKET - 96THOROC (S13-E04)	96THOROC	$ -	6	$ -
491	2201	GASKET 12 X 1/8 IN RED RUBBER - 12 HOLE F/F FG 12 (S11-B14)		$ -	2	$ -
492	2680	NUT OPERATING 2 SQ.IN. FOR 4IN - CLOW MJ GATE VALVE (S09-A04)		$ -	1	$ -
493	3807	VALVE BOX WATER WITH COVER P/N=7630-125 (S07-E08)	7630-125	$ -	2	$ -
494	5473	LOCK SEAL SHANK - LONG - PART #65FMLSSL	65FMLSSL	$ -	1	$ -
495	5811	CUTTER RATCHET FOR RS-1 - REED 94051 (B02-82)	94051	$ -	1	$ -
496	5812	CUTTER SPRING FOR RS1 - 40142 REED (B02-80)	40142	$ -	1	$ -
497	5813	CUTTER NUT FOR RS-1 - REED 30088 (B02-81)	30088	$ -	1	$ -
498	5814	CUTTER SPRING FOR RS2 - 40164 REED (B02-79)	40164	$ -	1	$ -
499	5982	CONCRETE MIX 80 LB BAG (SAKRETE)		$ -	1	$ -
500	6018	GREASE HYDRANT PETRO BLEND FG-2 (S09-B10)	FG-2	$ -	242	$ -
501	6068	MARKER WATER BALL 3M 1403XR *30 PER BX* (S09-C03)	1403XR	$ -	571	$ -
502	6069	MARKER SEWER BALL 3M 1404XR *30 PER BX* (S09-C07)	1404XR	$ -	726	$ -
503	6084	GASKET 16" X 1/8" RED RUBBER (S11-B13)		$ -	1	$ -
504		**7. SUBTOTAL**				**$ -**

ADDENDUM #2 - REVISED BID REPLY SPREADSHEET
E-BID #20120009

	A	B	E	G	H	I
505		**8. LIFT STATION PARTS / US FOUNDRY OR APPROVED EQUAL**				
506	**808**	RAIN GUARD SEWER MANHOLE W/STR - 22 1/2IN OD W/STRAP (S09-A01)		$ -	1	$ -
507	**1262**	RISER MANHOLE 23 1/2 X 1 1/2 - FOR 1 1/4 IN LID (YD-97)		$ -	1	$ -
508	**1274**	MANHOLE RING AND LID - USF-465B *DON'T RE-ORDER* (YD-101)		$ -	3	$ -
509	**1275**	MANHOLE RING & LID 24" * CDPA60EHSSE * SANITARY SEWER (YD-102)	CDPA60EHSSE	$ -	1	$ -
510	**3625**	RISER MANHOLE 22-3/4ID x 1-1/2 - FOR 2IN LID (YD-96)		$ -	1	$ -
511	**3626**	RISER MANHOLE 22-3/4ID x 2-1/2 - FOR 2IN LID		$ -	1	$ -
512	**3731**	RISER MANHOLE 24 X 1 1/2 IN - FOR 1 1/4 IN LID (YD-98)		$ -	1	$ -
513	**5079**	RISER MANHOLE 22-3/4ID x 1IN FOR 2IN #465 LID (YD-94)		$ -	2	$ -
514	**5742**	RISER MANHOLE 22-3/4ID x 2IN - FOR 2IN LID (YD-95)		$ -	1	$ -
515		**8. SUBTOTAL**				**$ -**
516		**9. METER BOXES & LIDS**				
517	**354**	LID ONLY SINGLE PLASTIC W/CI/R - 1419H	1419H	$ -	1	$ -
518	**355**	LID ONLY DOUBLE PLASTIC W/CI R - 1220H	1220H	$ -	1	$ -
519	**356**	LID ONLY SGL/CI W/CI READER - 36T (YD-78)	36T	$ -	3	$ -
520	**357**	LID ONLY /DUAL-H C.I. COVER (YD-82)		$ -	3	$ -
521	**420**	METER BOX JUMBO PLASTIC - W/CI READER LID (YD-02)		$ -	1	$ -
522	**1276**	METER BX DBL CONCRETE / NO LID (YD-86)		$ -	13	$ -
523	**1278**	METER BX JUMBO CONCRETE (YD-84)		$ -	1	$ -
524	**1280**	LID ONLY JUMBO CONCRETE - W / CONCRETE READER (YD-77)		$ -	3	$ -
525	**1281**	METER BOX SINGLE W/READ LID CONCRETE (YD-85)		$ -	5	$ -
526	**1282**	LID ONLY DOUBLE CONCRETE - DUAL H/CI W/READER (YD-81)	DUAL H	$ -	27	$ -
527	**1283**	LID SINGLE CONCRETE W/CI READ - 36H (YD-83)	36H	$ -	4	$ -
528	**3189**	LID SINGLE CONC. SOLID - 36H (YD-79)	36H	$ -	1	$ -
529	**5959**	LID, METER BOX WC00-1118-2C (YD-80)	WC00-1118-2C	$ -	1	$ -
530	**6048**	LID ONLY DOUBLE/SOLID PLASTIC/OVERLAPPING 117CW (YD-15)	117CW	$ -	1576	$ -
531	**6049**	LID ONLY SINGLE / SOLID OVERLAPPING / PLASTIC 113CW (YD-01)	113CW	$ -	611	$ -
532	**6050**	METER BOX COMPLETE/DOUBLE / SOLID OVERLAPPING LID 117B12CW-3 (YD-16)	117B12CW-3	$ -	1624	$ -
533	**6051**	METER BOX COMPLETE/SINGLE / SOLID OVERLAPPING LID 113BCW (YD-17)	113BCW	$ -	546	$ -
534		**9. SUBTOTAL**				**$ -**
535		**10. METERS, WATER & ALL PARTS**				
536	**3**	BACKFLOW 3/4IN PREV. RPZ WILKINS 975 XL (S10-B01)	975XL	$ -	32	$ -
537	**646**	BACKFLOW 1IN PREVENTER RPZ WILKINS 975XL BRASS (S10-B02)	975XL	$ -	19	$ -
538	**650**	BACKFLOW 2IN PREVENTER RPZ - WILKINS 975XL BRASS (S10-B04)	975XL	$ -	13	$ -
539	**5408**	LOCK SEAL KEY 93280139 - 65FMLSK (PC-B03)	65FMLSK	$ -	68	$ -
540	**5608**	BACKFLOW 1-1/2IN RPZ PREVENTER - WILKINS 975XL BRASS (S10-B03)	975XL	$ -	3	$ -
541		**10. SUBTOTAL**				**$ -**
542		**11. PIPE, PVC 40, C900**				
543	**1093**	PIPE 1/2IN SCH40 PVC - 20FT LENGTHS (PR1-B01)		$ -	481	$ -
544	**1094**	PIPE 3/4IN SCH40 PVC - 20FT SILVER LINE (PR5-D01)		$ -	22511	$ -
545	**1095**	PIPE 1IN SCH40 PVC - 20FT SILVER LINE (PR2-E01)		$ -	2211	$ -
546	**1096**	PIPE 3IN SCH40 PVC SILVER LINE (PR4-D01)		$ -	6141	$ -
547	**1097**	PIPE 2IN SCH40 PVC - 20FT SILVER LINE (PR7-D01)		$ -	811	$ -
548	**1098**	PIPE 1-1/4IN SCH40 PVC SILVER LINE (PR2-D01)		$ -	3261	$ -
549	**1099**	PIPE 2-1/2IN SCH40 PVC - 20FT SILVER LINE (PR7-C01)		$ -	1	$ -
550	**1100**	PIPE 1-1/2IN SCH40 PVC - 20FT SILVER LINE (PR5-C01)		$ -	22581	$ -
551	**1101**	PIPE 4IN SCH40 PVC SILVER LINE (PR4-E01)		$ -	1541	$ -
552	**1102**	POLY TUBING 1-1/2IN 200 PSI - 100 FT ROLL (PR7-I01)		$ -	1	$ -
553	**1103**	POLY TUBING 2IN 200 PSI - 100FT ROLLS (PR7-H01)		$ -	175	$ -
554	**1107**	POLY TUBING 1IN 200 PSI - 300FT ROLL DRISCO (YD-105)		$ -	12311	$ -
555	**1183**	PIPE 8IN X 14FT SEWER SDR26 (PR6-J01)	SDR-26	$ -	9	$ -
556	**1184**	PIPE 8IN DR 18-C-900 BLUE PVC (PR6-E01)	DR 18-C-900	$ -	33	$ -
557	**1189**	PIPE 4IN DR18 C-900 BLUE PVC (PR6-C01)	DR18 C-900	$ -	51	$ -
558	**1190**	PIPE 6IN DR-18 C900 BLUE PVC (PR6-D01)	DR-18 C900	$ -	122	$ -
559	**1191**	PIPE 4IN X 14FT SEWER SDR26 (PR6-H01)	SDR-26	$ -	9	$ -
560	**1192**	PIPE 6IN X 14FT SEWER SDR26 (PR6-I01)	SDR-26	$ -	42	$ -
561	**1402**	PIPE 6IN SCH40 PVC (PR7-B01)		$ -	58	$ -
562	**1407**	PIPE 8IN SCH40 PVC - 0508040 (PR7-A01)		$ -	1	$ -
563	**2095**	PIPE 18IN DR18 BLUE C905 CL235 (YDP-15)	DR18	$ -	1	$ -
564	**2096**	PIPE 18IN DR18 GREEN C905 CL235	DR18	$ -	1	$ -
565	**2097**	PIPE 24IN DR18 BLUE C905 CL235 (YDP-17)	DR18	$ -	1	$ -
566	**2098**	PIPE 24IN DR18 [MARKED W/GREEN (YDP-14)	DR18	$ -	1	$ -
567	**2111**	PIPE 12IN DR18 BLUE C900 CL150 - 021218B (PR6-F01)	DR18	$ -	74	$ -
568	**2112**	PIPE 10IN DR18 BLUE C900 CL150 (PR7-F01)	DR18	$ -	1	$ -
569	**2113**	PIPE 16IN DR18 BLUE C905 CL235 (YDP-11)	DR18	$ -	1	$ -
570	**2114**	PIPE 20IN DR18 BLUE C905 CL235 (YDP-16)	DR18	$ -	1	$ -
571	**2115**	PIPE 10IN DR18 GREEN C900 CL150 (YDP-09)	DR18	$ -	1	$ -
572	**2116**	PIPE 12IN DR18 GREEN C900 CL150	DR18	$ -	1	$ -
573	**2117**	PIPE 16IN DR18 GREEN C905 CL235 (YDP-12)	DR18	$ -	1	$ -
574	**2118**	PIPE 20IN DR18 GREEN C905 CL23 (YDP-10)	DR18	$ -	5	$ -
575	**5770**	POLY TUBING 3/4IN 200 PSI - 100FT ROLL (S04-E04)		$ -	6	$ -
576	**5895**	PIPE 20IN DR25 GREEN C905 (YDP-13)	DR25	$ -	1	$ -
577		**11. SUBTOTAL**				**$ -**

	A	B	E	G	H	I
578		**12. PLUMBING PARTS / STREAMLINE-MUELLER OR APPROVED EQUAL**				
579	**777**	TEE 3/4 X 3/4 X 3/4 COPPER WB04031 (S12-D48)	WB04031	$ -	15	$ -
580	**2824**	ESCUTCHEON PLATE-WHITE PVC 3/4" HOLE/PVC PIPE *921-3W* (S12-D36)	921-3W	$ -	25	$ -
581	**5263**	ADAPTER 3/4IN MPT X COPPER - W1146 (S12-D38)	W1146	$ -	118	$ -
582	**5264**	ADAPTER REDUCER 3/4 MPT X 1/2IN C - W1130 COPPER (S12-D37)	W1130	$ -	4	$ -
583	**5265**	ELL 90 DEG 3/4IN COPPER CxC - C9F - W1634 (S12-D39)	W1634	$ -	61	$ -
584	**5267**	FLUX WATER SOLUBLE 16OZ PASTE - 30133 Oatey (S12-D46)	30133 Oatey	$ -	12	$ -
585	**5321**	ESCUTCHEON PLATE 3/4" CHROME - E01075 25/BX (S12-D44)	E01075	$ -	1	$ -
586	**5322**	ESCUTCHEON PLATE - WHITE PVC 3/4in HOLE / COPPER * 920-3W * (S12-D43)	920-3W	$ -	11	$ -
587	**5323**	ADAPTER 3/4IN MPT BRASS x FS - CPVC 6033 (S12-D45)	CPVC 6033	$ -	3	$ -
588	**5362**	CAP 3/4IN COPPER - W7009 (S12-D42)	W7009	$ -	2	$ -
589	**5750**	COUPLING 3/4IN COPPER CxC - CCF- WBO1034 (S12-D40)	WBO1034	$ -	27	$ -
590	**5751**	ELL 45 DEG 3/4IN COPPER CxC - C4F- W3034 (S12-D41)	W3034	$ -	1	$ -
591	**5752**	ADAPTER 3/4IN COPPER CxF - CFAF- W1246 (S12-C33)	W1246	$ -	129	$ -
592	**5753**	REDUCER 1x3/4IN COPPER FTGxC - BUSHING -CRCGF- W1337 (S12-C32)	W1337	$ -	1	$ -
593	**5754**	UNION 3/4IN COPPER CxC - CUF- W8004 (S12-C35)	W8004	$ -	1	$ -
594	**5755**	PIPE 3/4IN COPPER - K HARD F20(PR1-D03)	K HARD	$ -	141	$ -
595	**5756**	COUPLING 1IN COPPER CxC - CCG- W1047 (S12-C36)	W1047	$ -	1	$ -
596	**5757**	ELL 90 DEG 1IN COPPER CxC - C9G- W1647 10/BX (S12-C38)	W1647	$ -	11	$ -
597	**5758**	ELL 45 DEG 1IN COPPER CxC - C4G- W3044 (S12-C37)	W3044	$ -	1	$ -
598	**5759**	ADAPTER 1IN COPPER CxM - CMAG- W1163 (S12-C39)	W1163	$ -	91	$ -
599	**5760**	ADAPTER 1IN COPPER CxF - CFAG- W1263 (S12-C40)	W1263	$ -	21	$ -
600	**5761**	UNION 1IN COPPER CxC - CUG- W8005 10/BX (S12-C41)	W8005	$ -	4	$ -
601	**5762**	PIPE 1IN COPPER - K HARD G20 (PR1-D02)	K HARD	$ -	81	$ -
602	**5764**	ELL 90 DEG 3/4IN COPPER FTGxC - STREET W1654(S12-C34)	W1654	$ -	95	$ -
603	**5765**	ELL 90 DEG 1IN COPPER FTGxC - STREET- CS9G- W2344 (S12-C42)	W2344	$ -	28	$ -
604	**5836**	PIPE 2IN COPPER K-HARD K20 (PR1-D01)	K-HARD	$ -	21	$ -
605	**5837**	COUPLING 2IN CxC COPPER - CCK- W1072 (S12-C46)	W1072	$ -	4	$ -
606	**5838**	ADAPTER MALE 2IN COPPER CxM - W1187 (S12-C45)	W1187	$ -	7	$ -
607	**5839**	ADAPTER FEMALE 2IN COPPER CxF - CFAK- W1287 (S12-C43)	W1287	$ -	4	$ -
608	**5840**	ELL 90 DEG. 2IN COPPER CxC - C9K- W2086 (S12-C44)	W2086	$ -	7	$ -
609		**12. SUBTOTAL**				**$ -**
610		**13. PVC PARTS & FITTINGS / SPEARS OR APPROVED EQUAL**				
611	**105**	VALVE 3/4IN BALL SXS SCH40 PVC - 2622-007 *SPEARS* (S16-E43)	2622-007	$ -	33	$ -
612	**106**	VALVE BALL 1IN SXS SCH 40 2622-010 *SPEARS* (S16-E44)	2622-010	$ -	6	$ -
613	**361**	ADAPTER 4IN SCH40 TO 4IN SDR26 - PVC (S06-A06)	SDR-26	$ -	31	$ -
614	**362**	REDUCER 6x4IN SxG SDR-26 SEWER (S06-A03)	SDR-26	$ -	2	$ -
615	**363**	REDUCER 8x6IN GASKET ENDS - SDR-26 (S07-A17)	SDR-26	$ -	1	$ -
616	**364**	SADDLE WYE 8x4IN SEWER SDR-26 - GASKET END (S07-A19)	SDR-26	$ -	1	$ -
617	**369**	TEE 8x8x6IN SANITARY - BELL ENDS (S07-A16)		$ -	1	$ -
618	**372**	WYE 6x4IN SINGLE - PVC P601-532 *SPEARS* (S07-A21)	P601-532	$ -	1	$ -
619	**374**	WYE SEWER 6x4x4IN DOUBLE - SDR26 (S07-A20)	SDR-26	$ -	3	$ -
620	**376**	WYE 8x6IN SEWER SDR-26 - GASKET END (S07-A15)	SDR-26	$ -	2	$ -
621	**379**	PLUG 4IN SEWER SPIGOT - PVC (S06-A05)		$ -	1	$ -
622	**380**	CAP 6IN SEWER GASKET END SDR26 - PVC (S07-A25)	SDR-26	$ -	1	$ -
623	**382**	PLUG 6IN SEWER SPIGOT - PVC (S07-A24)		$ -	6	$ -
624	**384**	PLUG 8IN SEWER SPIGOT - SDR-26 (S07-A23)	SDR-26	$ -	1	$ -
625	**385**	COUPLING 4 X 4IN SDR 26 PVC - GASKET END (S06-A07)	SDR-26	$ -	5	$ -
626	**387**	COUPLING 6IN PVC FOR SDR26 - GASKET END (S06-A01)	SDR-26	$ -	2	$ -
627	**391**	ELL 22-1/2 DEG.4IN BELL X BELL - FOR SDR-26 (S06-A09)	SDR-26	$ -	1	$ -
628	**392**	ELL 45 DEG.4IN BELL X BELL PVC - SDR-26 (S06-A08)	SDR-26	$ -	1	$ -
629	**393**	ELL 45 DEG. 4IN BELL X SPIGOT - SDR-26 PVC (S06-A11)	SDR-26	$ -	1	$ -
630	**394**	ELL 45 DEG 6IN BELL X BELL PVC - SDR26 (S06-A02)	SDR-26	$ -	1	$ -
631	**395**	ELL 45 DEG.6IN BELL X SPICKET - 27064GS SDR 26 (S06-A16)	SDR-26	$ -	6	$ -
632	**396**	CLEAN OUT 4 IN S-SDR 26 X THRD - SCH40 PVC *PER EA.* (S06-A12)	SDR-26	$ -	5	$ -
633	**397**	PLUG 3IN THRD SCH40 *FLUSH* - P110-030 CLEANOUT 50/BX *SPEARS* (S06-A13)	P110-030	$ -	317	$ -
634	**398**	PLUG 4IN THRD SCH40 *FLUSH* - P110-40 25/BX *SPEARS* (S06-A14)	P110-40	$ -	158	$ -
635	**399**	PLUG 6IN THRD SCH 40 FLUSH - P110-060 *SPEARS* (S06-A15)	P110-060	$ -	11	$ -
636	**400**	ADAPTER FEMALE 6IN SCH40 PVC - 435-060 *SPEARS* (S06-A32)	435-060	$ -	3	$ -
637	**401**	ADAPTER MALE 6IN SCH/40 436-060 *SPEARS* S06-A31)	436-060	$ -	1	$ -
638	**402**	CAP 6IN SLIP SCH 40 447-060 *SPEARS* (S06-A30)	447-060	$ -	2	$ -
639	**403**	COUPLING 6IN SCH 40 SXS PVC 429-060 *SPEARS* (S06-A29)	429-060	$ -	2	$ -
640	**404**	COUPLING 6IN COMP. SCH40 - 0110-60 *SPEARS* (S06-A28)	0110-60	$ -	1	$ -
641	**405**	ELL 45 DEG.6IN SXS SCH 40 PVC 417-060 * SPEARS* (S06-A27)	417-060	$ -	2	$ -
642	**406**	ELL 90 6IN SxS SCH40 406-060 *SPEARS* (S06-A26)	406-060	$ -	6	$ -
643	**407**	REDUCER 6x4IN SxS SCH40 - 437-532 *SPEARS* (S06-A25)	437-532	$ -	8	$ -
644	**408**	TEE 6IN SLIP SCH40 - 401-060 *SPEARS* (S06-A24)	401-060	$ -	1	$ -
645	**410**	COUPLING 8IN SCH 40 SXS - 429-080 *SPEARS* (S06-A21)	429-080	$ -	1	$ -
646	**411**	ELL 45 DEG.8IN SXS SCH 40 - 417-080 *SPEARS* (S06-A20)	417-080	$ -	1	$ -
647	**421**	COUPLING 4IN SXS SCH40 PVC 429-040 *SPEARS* *6/BX* (S05-A01)	429-040	$ -	119	$ -
648	**422**	ELL 22-1/2 DEG 4IN SxS SCH40 - 416-040 *SPEARS*	416-040	$ -	1	$ -
649	**423**	ELL 45 DEG 4IN SxS SCH40 PVC - 417-040 *SPEARS*	417-040	$ -	1	$ -
650	**424**	ELL 90 4IN SxS SCH40 PVC 406-040 *SPEARS* (S05-A03)	406-040	$ -	11	$ -
651	**425**	PLUG 4 IN THRD SCH40 PVC *5 PER BX* (S05-A04)		$ -	1	$ -

ADDENDUM #2 - REVISED BID REPLY SPREADSHEET
E-BID #20120009

	A	B	E	G	H	I
652	426	REDUCER 4INx3IN SLIP SCH40 PVC 437-422 *SPEARS* *6/BX* (S05-A07)	437-422	$ -	33	$ -
653	427	TEE 4IN SLIP SCH40 PVC 401-040 *SPEARS* (S05-A13)	401-040	$ -	2	$ -
654	428	VALVE 4IN CHECK SxS SCH40 - S475P PVC (S05-A14)	S475P	$ -	1	$ -
655	429	WYE 4 IN SINGLE DWV PVC (S05-A15)		$ -	5	$ -
656	430	COUPLING 3IN SxS SCH40 PVC 429-030 *SPEARS* *10/BX* (S05-B01)	429-030	$ -	194	$ -
657	431	ELL 22-1/2 DEG 3IN SxS SCH40 - 416-030 *SPEARS*	416-030	$ -	1	$ -
658	432	ELL 45 DEG 3IN SxS SCH 40 PVC - 417-030 *SPEARS*	417-030	$ -	1	$ -
659	433	ELL 90 3IN S X S SCH40 PVC 406-030 * SPEARS*	406-030	$ -	1	$ -
660	434	PLUG 3IN THRD SCH40 PVC (S05-B04)		$ -	1	$ -
661	436	REDUCER 3 X 1-1/2" SxS SCH40 437-337 *SPEARS* (S05-B05)	437-337	$ -	1	$ -
662	437	REDUCER 3 X 2IN SxS SCH40 - 437-338 (S05-B06)	437-338	$ -	15	$ -
663	438	TEE 3IN SLIP SCH 40 PVC - 401-030 *SPEARS* (S05-B07)	401-030	$ -	1	$ -
664	439	VALVE 3IN CHECK SxS SCH40 - PVC (S05-B08)		$ -	1	$ -
665	440	WYE 3IN SLIP - DWV SCH 40 P600-030 NON-PRESSURE *SPEARS* (S06-A04)	P600-030	$ -	1	$ -
666	441	ADAPTER 4IN FEMALE SCH40 PVC 435-040 *SPEARS* *6/BX* (S05-A08)	435-040	$ -	147	$ -
667	442	ADAPTER 4IN MALE SCH40 PVC 436-040 *SPEARS* *5/BX* (S05-A09)	436-040	$ -	58	$ -
668	443	CAP 4IN SLIP SCH 40 PVC 6/bx- 447-040 *SPEARS* (S05-A10)	447-040	$ -	25	$ -
669	444	CAP 4IN THREADED SCH40 PVC 448-030 6/bx (S05-A11)	448-030	$ -	1	$ -
670	445	COUPLING 4IN COMPRESSION PVC SCH-40 S110-40 *SPEARS* (S05-A12)	S110-40	$ -	11	$ -
671	446	ELL 22-1/2 DEG. 2IN SxS SCH40 - 416-020 *SPEARS* (S05-C02)	416-020	$ -	2	$ -
672	447	ELL 45 DEG. 2IN SxS SCH40 PVC 25bx- 417-020 *SPEARS* (S05-C03)	417-020	$ -	46	$ -
673	448	ELL 90 2IN S X FPT SCH40 PVC (S05-C04)		$ -	4	$ -
674	449	ELL 2IN 90 ST S X MPT SCH40 PVC (S05-C05)		$ -	3	$ -
675	450	ELL 90 2IN SXS SCH40 25/bx 406-020 *SPEARS* (S05-C06)	406-020	$ -	41	$ -
676	451	ELL 2IN 90 ST FPT X MPT SCH40 PVC (S05-C07)		$ -	2	$ -
677	452	PLUG THRD 2IN SCH40 - 450-020 10/BX *SPEARS* (S05-C08)	450-020	$ -	14	$ -
678	453	TEE 2IN SLIP SCH40 401-020 *SPEARS* (S05-C09)	401-020	$ -	17	$ -
679	454	VALVE 2IN CHECK SXS SCH 40 - 1520-020 (S05-C10)	1520-020	$ -	4	$ -
680	455	COUPLING 2-1/2IN SxS SCH40 PVC 429-025 *SPEARS* *12/BX* (S05-C24)	429-025	$ -	4	$ -
681	456	COUPLING 2-1/2IN COMP SCH40 S110-25 *SPEARS* *6/BX* (S05-C20)	S110-25	$ -	1	$ -
682	457	ADAPTER 3IN FEMALE SCH40 PVC 435-030 *SPEARS* *10/BX* (S05-B10)	435-030	$ -	274	$ -
683	458	ADAPTER 3IN MALE SCH40 PVC 436-030 *SPEARS* *10/BX* (S05-B12)	436-030	$ -	83	$ -
684	459	CAP 3IN SLIP SCH40 PVC 10/bx- 447-030 *SPEARS* (S05-B13)	447-030	$ -	94	$ -
685	460	CAP 3IN THREADED SCH40 PVC - 448-030 *SPEARS* (S05-B14)	448-030	$ -	4	$ -
686	461	COUPLING 3IN COMP SCH40 PVC - S110-30 *SPEARS* *4/BX* (S05-B15)	S110-30	$ -	2	$ -
687	462	ELL 90 1-1/2IN ST SxMPT SCH40 - 410-015 *SPEARS* (S05-D01)	410-015	$ -	3	$ -
688	463	ELL 90 1-1/2IN SXS SCH40 PVC 406-015 *SPEARS* *25/BX* (S05-D02)	406-015	$ -	245	$ -
689	464	SWEEP 90 1-1/2IN SxS SCH40 - D304-015 *SPEARS* (S05-D04)	D304-015	$ -	16	$ -
690	465	ELL 90 1-1/2IN ST MPTxFPT SCH40 - 412-015 *SPEARS* (S05-D05)	412-015	$ -	1	$ -
691	466	TEE 1-1/2IN SLIP SCH40 PVC 401-015 25/bx *SPEARS* (S05-D06)	401-015	$ -	45	$ -
692	467	PLUG 1-1/2IN THRD SCH40 PVC - 450-015 *SPEARS* (S05-D07)	450-015	$ -	11	$ -
693	468	VALVE BALL 1-1/2IN SxS SCH40 2622-015 *SPEARS* *20bx* (S05-D09)	2622-015	$ -	243	$ -
694	469	VALVE 1-1/2IN CHECK SXS 1520C-15 *CLEAR* FLO CONTROL *12BX* (S05-D10)	1520C-15	$ -	329	$ -
695	470	ADAPTER FEMALE 2IN SCH40 PVC 435-020 *SPEARS* *10/BX* (S05-C11)	435-020	$ -	12	$ -
696	471	ADAPTER 2IN MALE SCH40 PVC - 436-020 *SPEARS* *25/BX* (S05-C13)	436-020	$ -	76	$ -
697	472	REDUCER MALE 2x1-1/2 SxMPT 436-251 SCH40 *SPEARS* *10/BX* (S05-C19)	436-251	$ -	9	$ -
698	473	CAP 2IN SLIP SCH40 PVC 447-020 *SPEARS* *10 PER BX* (S05-C15)	447-020	$ -	28	$ -
699	474	CAP 2IN THREADED SCH40 448-020 10/BX *SPEARS* (S05-C16)	448-020	$ -	11	$ -
700	475	COUPLING 2IN COMP SCH40 PVC - 0110-20 *SPEARS* *12/BX* (S05-C12)	0110-20	$ -	15	$ -
701	476	COUPLING 2IN SCH40 SXS PVC - 429-020 *SPEARS* *25/BX* (S05-C17)	429-020	$ -	52	$ -
702	477	ELL 45 DEG 1IN SxS SCH40 PVC 50/bx- 417-010 *SPEARS* (S05-E01)	417-010	$ -	95	$ -
703	478	ELL 90 1IN SxFPT SCH40 PVC - 407-010 *SPEARS* (S05-E02)	407-010	$ -	5	$ -
704	479	ELL 90 1IN ST SxMPT SCH40 PVC 50/bx- 410-010 *SPEARS* (S05-E03)	410-010	$ -	24	$ -
705	480	ELL 90 1IN SxS SCH40 PVC - 406-010 *SPEARS* *50 PER BX* (S05-E04)	406-010	$ -	421	$ -
706	481	ELL 90 1IN STREET MPTxFPT SCH40 412-010 PVC (S05-E05)	412-010	$ -	2	$ -
707	482	ELL 90 1IN FPTxFPT SCH40 PVC (S05-E06)		$ -	2	$ -
708	483	PLUG 1IN SLIP SCH40 PVC 449-010 *SPEARS* (S05-E07)	449-010	$ -	1	$ -
709	484	PLUG 1IN THRD SCH40 PVC - 450-010 *SPEARS* (S05-E08)	450-010	$ -	1	$ -
710	485	TEE 1IN SLIP SCH40 PVC - 401-010 *SPEARS* *50 PER BX* (S05-E09)	401-010	$ -	59	$ -
711	486	COUPLING 1-1/4IN SXS SCH40 PVC - 429-012 *SPEARS* 25BX (S05-E10)	429-012	$ -	1149	$ -
712	487	ADAPTER MALE HOSE 1-1/2IN PVC - 1436-015 25/BX *SPEARS* (S05-D08)	1436-015	$ -	52	$ -
713	488	ADAPTER 1-1/2IN FEMALE SCH40 - 435-015 *SPEARS* *25/BX* (S05-D11)	435-015	$ -	35	$ -
714	489	ADAPTER 1-1/2IN MALE SCH40 PVC 436-015 SPEARS 25/BX (S05-D12)	436-015	$ -	261	$ -
715	490	REDUCER ADAPT 1-1/4 x 1-1/2 SxMPT 436-169 *SPEARS* *25/BX* (S05-D18)	436-169	$ -	82	$ -
716	491	CAP 1-1/2IN SLIP SCH40 PVC 25/bx- 447-015 *SPEARS* (S05-D13)	447-015	$ -	62	$ -
717	492	CAP 1-1/2IN THREADED SCH40 PVC 448-015 *SPEARS* 25BX (S05-D14)	448-015	$ -	113	$ -
718	493	COUPLING 1-1/2 IN COMPRESSION S110-15 *SPEARS* *16/BX* (S05-D15)	S110-15	$ -	33	$ -
719	494	COUPLING 1-1/2IN SxS SCH40 PVC 429-015 *SPEARS* 25BX (S05-D16)	429-015	$ -	1659	$ -
720	495	CROSS 1-1/2IN SLIP SCH40 PVC - 420-015 *SPEARS* *25 PER BX* (S05-E18)	420-015	$ -	83	$ -
721	496	ELL 45 DEG 1-1/2IN SxS SCH40 417-015 *SPEARS* *25BX* (S05-E19)	417-015	$ -	2245	$ -
722	497	ELL 90 1-1/2IN STREET S x FPT PVC 407-015 SCH40 *SPEARS* *25/BX*(S05-D17)	407-015	$ -	64	$ -
723	498	ADAPTER FEMALE 1/2IN SCH40 PVC - 435-005 50/BX *SPEARS* (S14-D02)	435-005	$ -	6	$ -
724	499	ADAPTER MALE 1/2IN SCH40 PVC - 436-005 *SPEARS* (S14-D03)	436-005	$ -	21	$ -
725	500	COUPLING 1/2IN SxS SCH40 - 429-005 *SPEARS* (S14-D05)	429-005	$ -	16	$ -

ADDENDUM #2 - REVISED BID REPLY SPREADSHEET
E-BID #20120009

	A	B	E	G	H	I
726	**501**	ELL 45 DEG 1/2IN SxS SCH40 PVC - 417-005 *SPEARS* (S14-D07)	417-005	$ -	6	$ -
727	**502**	ELL 90 DEG 1/2IN SxFPT SCH40 - 407-005 *SPEARS* (S14-D01)	407-005	$ -	7	$ -
728	**503**	ELL 90 DEG.1/2IN MPTXS SCH40 - PVC 410-005 *SPEARS* (S14-D04)	410-005	$ -	5	$ -
729	**504**	ELL 90 DEG 1/2IN SxS SCH40 PVC - 406-005 50/BX *SPEARS* (S14-D10)	406-005	$ -	13	$ -
730	**505**	ADAPTER FEMALE 3/4IN SCH40 PVC - 435-007 *SPEARS* (S14-D11)	435-007	$ -	71	$ -
731	**506**	ADAPTER MALE 3/4IN SCH40 PVC - 436-007 *SPEARS* *50 PER BX* (S14-D12)	436-007	$ -	2563	$ -
732	**507**	CAP 3/4IN SLIP SCH40 PVC - 447-007 50/BX *SPEARS* (S14-D09)	447-007	$ -	289	$ -
733	**508**	CAP 3/4IN THREADED SCH40 PVC - 448-007 *SPEARS* (S14-D14)	448-007	$ -	7	$ -
734	**509**	COUPLING 3/4IN COMPRESSION PVC - S110-07 *SPEARS* (S14-D16)	S110-07	$ -	16	$ -
735	**510**	COUPLING 3/4IN SxS SCH40 429-007 50/BX *SPEARS* (S14-D08)	429-007	$ -	829	$ -
736	**511**	COUPLING 3/4IN FPTxFPT SCH40 - 430-007 *SPEARS* (S14-D13)	430-007	$ -	8	$ -
737	**512**	CROSS 3/4IN SLIP SCH40 PVC - 420-007 *SPEARS* (S14-D19)	420-007	$ -	21	$ -
738	**513**	ELL 45 DEG 3/4IN SxS SCH40 417-007 *SPEARS* *50 PER BX* (S14-D20)	417-007	$ -	837	$ -
739	**514**	ELL 90 3/4IN FPTxS SCH40 PVC - 407-007 *SPEARS* (S14-D17)	407-007	$ -	139	$ -
740	**515**	ELL 90 DEG 3/4IN FPTxMPT SCH40 412-007 50/BX *SPEARS* (S14-D18)	412-007	$ -	122	$ -
741	**516**	ELL 90 3/4IN STR SxMPT SCH40 - 410-007 50/BX *SPEARS* (S14-D24)	410-007	$ -	251	$ -
742	**517**	ELL 90 3/4IN SxS SCH40 PVC - 406-007 *SPEARS* *50 PER BX* (S14-D25)	406-007	$ -	2898	$ -
743	**518**	PLUG 3/4IN THRD SCH40 PVC - 450-007 *SPEARS* *PER EA.* (S14-D21)	450-007	$ -	3	$ -
744	**519**	TEE 3/4IN SLIP SCH 40 - 401-007 *SPEARS* (S14-D22)	401-007	$ -	71	$ -
745	**520**	ADAPTER 3/4x1IN - MPTxS - SCH40 436-102 50/BX *SPEARS* (S14-D29)	436-102	$ -	143	$ -
746	**521**	ADAPTER FEMALE 1IN SCH40 PVC - 435-010 *SPEARS* (S14-D26)	435-010	$ -	21	$ -
747	**522**	ADAPTER MALE 1IN SCH40 PVC - 436-010 50/BX *SPEARS* (S14-D27)	436-010	$ -	199	$ -
748	**523**	ADAPTER FEMALE 3/4x1IN SCH40 435-131 50/BX *SPEARS* (S14-D28)	435-131	$ -	4	$ -
749	**524**	CAP 1IN SLIP SCH40 PVC - 447-010 *SPEARS* *50 PER BX* (S14-D30)	447-010	$ -	128	$ -
750	**525**	CAP 1IN THREADED SCH40 PVC 448-010 *SPEARS* (S14-D31)	448-010	$ -	3	$ -
751	**526**	COUPLING COMP 1IN SCH40 PVC - S110-10 *SPEARS* (S14-D32)	S110-10	$ -	1	$ -
752	**527**	COUPLING 1IN SxS SCH40 PVC - 429-010 *SPEARS* *50 PER BX* (S14-D33)	429-010	$ -	537	$ -
753	**528**	REDUCER 2 x 1-1/2IN MPTxFPT SCH40 - 439-251 *SPEARS* (S14-D34)	439-251	$ -	1	$ -
754	**529**	REDUCER 2x 1-1/2IN SxF SCH40 - PVC (S14-D38)		$ -	7	$ -
755	**530**	REDUCER 2 x 1-1/2IN SxS SCH40 - 437-251 25/BX *SPEARS* (S14-D36)	437-251	$ -	55	$ -
756	**531**	REDUCER 2x1IN SxFPT SCH40 PVC (S14-D37)		$ -	13	$ -
757	**532**	REDUCER 2x1IN MPTxFPT SCH40 PVC - 439-249 *SPEARS* (S14-D40)	439-249	$ -	6	$ -
758	**533**	REDUCER 2x1IN SxS SCH40 * 437-249* (S14-D35)	437-249	$ -	3	$ -
759	**534**	REDUCER 2 x 3/4IN SxFPT SCH40 PVC (S14-D39)		$ -	11	$ -
760	**535**	REDUCER 2x 3/4IN SxS SCH40 PVC 437-248 *SPEARS* (S14-D44)	437-248	$ -	11	$ -
761	**536**	REDUCER 1-1/2x1-1/4 SxS - 437-212 *SPEARS* *25 PER BX* (S14-D50)	437-212	$ -	729	$ -
762	**537**	REDUCER 1-1/2 x 1IN MPTxFPT SCH40 - 439-211 *SPEARS* (S14-D47)	439-211	$ -	23	$ -
763	**538**	REDUCER 1-1/2 x 1IN SxFPT SCH40 - 438-211 25/BX *SPEARS* (S14-D53)	438-211	$ -	32	$ -
764	**539**	REDUCER 1-1/2 X 1IN SXS SCH40 437-211 25/bx *SPEARS* (S14-D46)	437-211	$ -	25	$ -
765	**540**	REDUCER 1-1/2 x 3/4IN MPTxFPT SCH40 - PVC 439-210 (S14-D45)	439-210	$ -	3	$ -
766	**541**	REDUCER 1-1/2 x 3/4IN SxFPT SCH40 - PVC (S14-D51)		$ -	1	$ -
767	**542**	REDUCER 1-1/2x 3/4IN SxS SCH40-437-210 25/bx (S14-D54)	437-210	$ -	9	$ -
768	**543**	REDUCER 1 x 3/4IN SxFPT SCH40 - 438-131 (S14-D43)	438-131	$ -	7	$ -
769	**544**	REDUCER 1x3/4IN SxS SCH40 PVC - 437-131 *SPEARS* *50 PER BX* (S14-D52)	437-131	$ -	268	$ -
770	**545**	REDUCER 3/4INx1/2IN SxS SCH40 437-101 *SPEARS* *50 PER BX* (S14-D49)	437-101	$ -	31	$ -
771	**546**	REDUCER 1/2 x 1/4IN SxFPT SCH40 - 438-072 (S14-D41)	438-072	$ -	24	$ -
772	**737**	VALVE BALL 4 IN SxS SCH40 2622-040 *SPEARS* (S05-A16)	2622-040	$ -	1	$ -
773	**1258**	CLEANOUT 2 WAY 3" SXSXS SCH40 D448-030 10/BX *LESCO ONLY* (S05-C25)	D448-030	$ -	118	$ -
774	**1259**	CLEANOUT 2 WAY 4" SXSXS SCH40 D448-040 5/BX *LESCO ONLY* (S05-F09)	D448-040	$ -	87	$ -
775	**1400**	WYE 6IN SXS SCH/40 P600-060 *SPEARS* (S06-A23)	P600-060	$ -	1	$ -
776	**1401**	ADAPTER MALE 8IN SCH/40 - PVC (S06-A17)		$ -	1	$ -
777	**1403**	WYE 3IN SxS SCH 40 PVC - 475-030 PRESSURE *SPEARS* (S05-B09)	475-030	$ -	1	$ -
778	**1404**	ELL 90 8IN SXS SCH 40 - PVC 406-080 (S06-A19)	406-080	$ -	1	$ -
779	**1405**	ADAPTER FEMALE 8IN SCH/40 - PVC (S06-A18)		$ -	1	$ -
780	**1614**	TEE SANITARY 3IN SxSxS PVC - P400-030 *5 PER BX* (S04-C24)	P400-030	$ -	1	$ -
781	**1615**	TEE SANITARY 4IN SxSxS PVC - P400-040 *5 PER BX* (S04-C25)	P400-040	$ -	1	$ -
782	**1798**	COUPLING 8IN PVC FOR SDR35 - GASKET END (S07-A22)	SDR-26	$ -	1	$ -
783	**1843**	REDUCER 3/4x1/4IN SxFPT SCH40 PVC 438-098 *SPEARS* (S14-D42)	438-098	$ -	5	$ -
784	**1938**	ADAPTER HOSE 3/4IN SCH40 PVC - 1436-007 GRAY *SPEARS* (S16-E28)	1436-007	$ -	11	$ -
785	**1939**	ELL 90 3/4IN MxHOSE BARB SCH40 - 1413-007 *SPEARS* (S16-E29)	1413-007	$ -	1	$ -
786	**2004**	CROSS 2IN SLIP PVC SCH 40 - 420-020 (S05-C14)	420-020	$ -	1	$ -
787	**2032**	REDUCER 1 1/2 x 1-1/4 SxFPT SCH40 - 438-212 (S14-D48)	438-212	$ -	2	$ -
788	**2742**	CAP 1/2IN SLIP SCH40 PVC 447-005 (S14-D06)	447-005	$ -	14	$ -
789	**3929**	TEE 3/4X3/4X1/2IN SXSXF 402-101 (S14-D15)	402-101	$ -	3	$ -
790	**3930**	TEE 1x1x3/4IN SxSxFPT SCH40 402-131 (S05-E12)	402-131	$ -	18	$ -
791	**5268**	TEE 3/4IN SxSxFPT SCH40 50/BX *SPEARS* 402-007 (S14-D23)	402-007	$ -	279	$ -
792	**5569**	ELL 90 4IN BELL X SPIGOT - SDR-35 PVC (S06-A10)	SDR-26	$ -	1	$ -
793	**5641**	CAP 8IN SLIP PVC SCH 40 (S06-A22)		$ -	1	$ -
794	**5695**	VALVE 2IN BALL SxS PVC - 2622-020 *SPEARS* (S05-C18)	2622-020	$ -	7	$ -
795	**5793**	REDUCER 8x4 SCH40 PVC - PART #2908040RS040H	2908040RS040H	$ -	1	$ -
796	**5796**	ELL 45 DEG. 2-1/2IN SxS SCH40 - 417-025 (S05-C21)	417-025	$ -	1	$ -
797	**5797**	ELL 90 2-1/2IN SCH40 SxS (S05-C23)		$ -	1	$ -
798	**5798**	REDUCER 2-1/2 x 2IN SCH40 SxS - 437-292 (S05-C22)	437-292	$ -	13	$ -
799	**5799**	REDUCER 3 x 2-1/2IN SCH40 SxS - 437-339 (S05-B11)	437-339	$ -	8	$ -

	A	B	E	G	H	I
800	5909	SWEEP 90 DEG 3 IN SxS SCH40 - D300-030 DWV (S05-B16)	D300-030	$ -	26	$ -
801	5910	SWEEP 45 DEG 3IN SxS SCH40 - P321-030 DWV *25 PER BX* (S06-F07)	P321-030	$ -	336	$ -
802	5911	SWEEP 22 1/2 DEG 3IN SxS SCH40 P324-030 DWV *20/BX* (S05-B02)	P324-030	$ -	117	$ -
803	5912	SWEEP 90 DEG 4IN SxS SCH40 10/bx- D300-040 DWV (S05-A02)	D300-040	$ -	14	$ -
804	5913	SWEEP 45 DEG 4IN SxS SCH40 - P321-040 DWV *15 PER BX* (S05-A05)	P321-040	$ -	116	$ -
805	5914	SWEEP 22 1/2 DEG 4IN SxS SCH40 - P324-040 DWV *15/BX* (S05-A06)	P324-040	$ -	69	$ -
806	5924	SADDLE HOT TAP 2-1/2X1-1/2 IN - SPEARS HT2-291 (S08-B17)	HT2-291	$ -	1	$ -
807	6016	ELL 90 DEG 1 1/4 SCH 40 SXS 406-012 25/bx *SPEARS* (S05-E11)	406-012	$ -	116	$ -
808	6024	CLEAN OUT ADAPTER 6" SDR 26 *P1406* (S07-A18)	SDR-26	$ -	7	$ -
809		**13. SUBTOTAL**				**$ -**
810		**14. REPAIR CLAMPS & FERNCOS / SMITH-BLAIR, FORD OR APPROVED EQUAL**				
811	656	FERNCO 2 x 2IN PVC TO PVC (S07-A01)		$ -	1	$ -
812	657	FERNCO 3IN PVC TO PVC - 1056-33 (S07-A02)	1056-33	$ -	22	$ -
813	658	FERNCO CLAY TO PVC 4 x 3IN (S07-A03)		$ -	3	$ -
814	659	FERNCO 4IN PVC TO PVC - 1056-44 (S07-A04)	1056-44	$ -	52	$ -
815	660	FERNCO 4IN CLAY TO PVC - 1002-44 (S07-A05)	1002-44	$ -	14	$ -
816	661	FERNCO 4IN CLAY TO CLAY (S07-A06)		$ -	3	$ -
817	662	FERNCO 6IN PVC TO PVC - 1056-66 (S07-A07)	1056-66	$ -	3	$ -
818	663	FERNCO 6IN CLAY TO PVC - 1002-66 (S07-A08)	1002-66	$ -	2	$ -
819	664	FERNCO 6IN CLAY TO CLAY (S07-A09)		$ -	1	$ -
820	665	FERNCO 6 X 8 IN PVC TO PVC (S07-A10)		$ -	1	$ -
821	667	FERNCO 8 x 8IN PVC TO PVC (S07-A12)		$ -	2	$ -
822	668	FERNCO 8IN CLAY TO PVC (S07-A13)		$ -	7	$ -
823	671	FERNCO 10X10IN CLAY TO PVC (S07-A14)		$ -	1	$ -
824	672	DONUT 3IN RUBBER SWCI X SCH 40 - INDIANA SEAL (S08-A09)		$ -	1	$ -
825	673	DONUT 4IN RUBBER CLAY BELL X - XHC/I C/BELL#432-405 (S08-A08)	432-405	$ -	1	$ -
826	674	DONUT 4IN RUBBER CLAY BELL X - SWC/I DICKEY BELL PVW #404 (S08-A07)	404	$ -	1	$ -
827	675	DONUT 4IN RUBBER CLAY BELL X - SWC/I GRIFFEN C/BELL (S08-A06)		$ -	1	$ -
828	676	DONUT 6IN RUBBER DICKEY - CLAY BELL #608 (S08-A05)	608	$ -	1	$ -
829	677	DONUT 6IN RUBBER GRIFFIN - CLAY BELL #604-609 (S08-A04)	604-609	$ -	1	$ -
830	678	DONUT 6 IN RUBBER 6 X 4 IN - INDIANA SEAL CS604-41 (S08-A03)	CS604-41	$ -	1	$ -
831	679	DONUT 8IN RUBBER INDIANA SEAL - #C5898-85 (S08-A02)	C5898-85	$ -	1	$ -
832	681	CLAMP REPAIR H/C 3/4 X 3 IN SS - 245-00010503-0 (S07-B01)	245-00010503-000	$ -	1	$ -
833	682	CLAMP REPAIR F.CIR 3/4x 3IN SS - #244-00010503-000 12/BX (S07-B02)	244-00010503-000	$ -	384	$ -
834	683	CLAMP REPAIR H/C 3/4 X 6 IN SS - 245-00010506-0 (S07-B03)	245-00010506-000	$ -	1	$ -
835	684	CLAMP REPAIR F/C 3/4 X 6 IN SS - 244-00010506-000 (S07-B04)	244-00010506-000	$ -	1	$ -
836	685	CLAMP REPAIR H/C 1 X 3 IN SS - 245-00013203-0 (S07-B05)	245-00013203-000	$ -	1	$ -
837	686	CLAMP REPAIR 1x3IN SS FULL CIRCLE - 244-013203-000 SB (S07-B06)	244-013203-000	$ -	5	$ -
838	687	CLAMP REPAIR F/C 1 X 6 IN SS - 244-00013206-000 (S07-B07)	244-00013206-000	$ -	1	$ -
839	688	CLAMP REPAIR H/C 1-1/2 X 3 IN - 245-00019003-0 (S07-B08)	245-00019003-000	$ -	2	$ -
840	689	CLAMP REPAIR F/C 1-1/2 X 3 IN - 244-00019003-000 *6 PER BX* (S07-B09)	244-00019003-000	$ -	3	$ -
841	690	CLAMP REPAIR H/C 1-1/2 X 6 IN - 245-00019006-0 (S07-B10)	245-00019006-000	$ -	1	$ -
842	691	CLAMP REPAIR F.C. 1-1/2 x 6IN - 244-00019006-000 (S07-B11)	244-00019006-000	$ -	1	$ -
843	692	CLAMP REPAIR F/C 1-1/2X7-1/2IN - 1.88-1.92 (S07-B12)		$ -	1	$ -
844	693	CLAMP REPAIR H/C 2 X 3 IN SS - 245-00023803-0 (S07-B15)	245-00023803-000	$ -	1	$ -
845	694	CLAMP REPAIR 2 x 3IN SS FULLCIRCLE #244-00023803-000 *6 PER BX* (S07-B16)	244-00023803-000	$ -	1	$ -
846	695	CLAMP REPAIR 2 X 6 IN SS - 245-00023806-0 (S07-B17)	245-00023806-000	$ -	1	$ -
847	696	CLAMP REPAIR F/C 2 X 6 IN SS - 244-00023806-000 (S07-B18)	244-00023806-000	$ -	1	$ -
848	697	CLAMP REPAIR 2 X 7-1/2 IN SS - 2.35-2.63 (S07-B19)		$ -	1	$ -
849	698	CLAMP REPAIR 2 X 12 IN SS - 245-00023812-0 (S07-B20)	245-00023812-000	$ -	1	$ -
850	699	CLAMP REPAIR F/C 2 X 12-1/2 IN - 2.35-2.63 (S07-B21)		$ -	1	$ -
851	700	CLAMP REPAIR S/B 3 X 12-1/2 IN - 226-00035012-000 (S07-B23)	226-00035012-000	$ -	1	$ -
852	701	CLAMP REPAIR 3 x 15IN S.S. - 3.46-3.70 FULL CIRCLE (S07-B24)		$ -	1	$ -
853	703	CLAMP REPAIR S/B 4X12-1/2IN SS - 4.74-5.14 (S07-C03)		$ -	1	$ -
854	704	CLAMP REPAIR S/B 4 X 15 IN SS - 4.95-5.35 (S07-C04)		$ -	1	$ -
855	705	CLAMP REPAIR S/B 4x15IN SS - 4.45-4.73 (S07-C05)		$ -	4	$ -
856	706	CLAMP REPAIR S/B 4x15IN SS - O.D.RANGE 4.74-5.14 (S07-C06)		$ -	1	$ -
857	707	CLAMP REPAIR S/B 6 X 7-1/2 IN - 6.56-6.96 (S07-C07)		$ -	1	$ -
858	709	CLAMP REPAIR 6 X 15IN SINGLE BAND - 6.84-7.24 FORD SS (S07-C10)		$ -	4	$ -
859	710	CLAMP REPAIR 6x15IN 7.05-7.45 #226-071015-000 (S07-C11)	226-071015-000	$ -	1	$ -
860	711	SLEEVE 6X6X6 TAPPING (S07-C12)		$ -	1	$ -
861	712	SLEEVE 8X6X8 TAPPING 8.63-9.05 - FORD FAST-905X6 (S07-C13)	905X6	$ -	1	$ -
862	713	CLAMP REPAIR D/B 8 X 10 IN SS - 8.99-9.39 (S07-C14)		$ -	1	$ -
863	714	CLAMP REPAIR S/B 8 X 15 IN SS - 8.54-8.94 (S07-C15)		$ -	1	$ -
864	715	CLAMP REPAIR 8x15IN 8.99-9.39 - #226-090515-000 (S07-C16)	226-090515-000	$ -	1	$ -
865	717	CLAMP REPAIR S/B 8 X 15 IN SS - FORD F1-967X15 (S07-C17)	967X15	$ -	1	$ -
866	718	CLAMP REPAIR S/B SS 10 X 15 9.70-10.10 (S07-D01)		$ -	1	$ -
867	719	CLAMP REPAIR D/B 10 X 15 IN SS - 10.70-11.50 D/B (S07-D02)		$ -	1	$ -
868	720	CLAMP REPAIR S/B 10 X 16 IN SS - 11.04-11.44 S/B (S07-D03)		$ -	1	$ -
869	721	CLAMP REPAIR D/B 10" X 15 " SS - 11.60-12.40 (S07-D04)		$ -	1	$ -
870	722	CLAMP REPAIR S/B 12 X 12-1/2IN - 14.00-14.40 S/B (S07-D05)		$ -	1	$ -
871	723	CLAMP REPAIR D/B 12 X 15 IN SS - 12.70-13.50 D/B (S07-D06)		$ -	1	$ -
872	724	CLAMP REPAIR S/B 12 X 15 13.10-13.50 226-00132015000 (S07-D07)	226-00132015000	$ -	1	$ -

	A	B	E	G	H	I
873	725	CLAMP REPAIR D/B 12 X 15 IN SS - 13.65-14.45 D/B (S07-D08)		$ -	1	$ -
874	726	CLAMP REPAIR S/B 12 X 15 IN SS - 14.00-14.40 S/B (S07-D09)		$ -	1	$ -
875	728	CLAMP REPAIR D/B 16 X 15 IN SS - 17.15-17.90 (S07-D10)		$ -	1	$ -
876	729	CLAMP REPAIR D/B 16 X 15 IN SS - 18.46-19.21 (S07-D11)		$ -	1	$ -
877	730	CLAMP REPAIR D/B 16 X 20IN SS - 17.15-17.90 (S07-D12)		$ -	1	$ -
878	731	CLAMP REPAIR D/B 18 X 15IN SS - 18.46-19.21 (S07-E01)		$ -	1	$ -
879	732	CLAMP REPAIR D/B 18 X 15IN SS 19.23-19.98 228-20192315-000 (S07-E03)	228-20192315-000	$ -	1	$ -
880	733	CLAMP REPAIR D/B 20 X 30IN SS - 21.52-22.27 (S07-E04)		$ -	1	$ -
881	789	COUPLING 4 FLG ADAP.4.74-4.90 - 912-00048004-000 (S08-D07)	912-00048004-000	$ -	1	$ -
882	799	COUPLING 10IN QUANTUM - 10.64-11.97 461-10641197 (S08-D16)	461-10641197	$ -	1	$ -
883	801	COUPLING 10IN D/I 11.55-12.12 - D/I (S08-E02)		$ -	1	$ -
884	805	COUPLING 12IN D/I 13.92-14.26 - D/I (S08-E05)		$ -	1	$ -
885	838	CLAMP 4IN BELL JOINT LEAK-4.80 - 274-00000480-000 (S09-E01)	274-00000480-000	$ -	1	$ -
886	839	CLAMP 6IN BELL JOINT LEAK-6.90 - 274-00000690-000 (S09-E02)	274-00000690-000	$ -	1	$ -
887	840	CLAMP 8IN BELL JOINT LEAK - 9.05-9.30 (S09-E03)		$ -	1	$ -
888	841	CLAMP 10IN BELL JOINT LEAK - 11.10-11.40 (S09-E04)		$ -	1	$ -
889	842	CLAMP 12IN BELL JOINT LEAK - 13.20-13.50 (S09-E05)		$ -	1	$ -
890	843	CLAMP 16IN BELL JOINT LEAK - 17.40-17.80 (S09-E07)		$ -	1	$ -
891	844	CLAMP 18IN BELL JOINT LEAK - 19.50-19.92 (S09-E08)		$ -	1	$ -
892	1461	COUPLING 8IN MAXI-FIT - 8.59-9.25 (S08-D15)		$ -	1	$ -
893	3541	CLAMP REPAIR F/C 1-1/2X 12-1/2 - 1.88-1.92 (S07-B13)		$ -	1	$ -
894	3542	CLAMP REPAIR F/C 1-1/2 X 15 IN - 1.88-1.92 n/l/a (S07-B14)		$ -	1	$ -
895	3543	CLAMP REPAIR F/C 2 X 15 IN SS - 2.35-2.63 (S07-B22)		$ -	1	$ -
896	4116	COUPLING 6IN QUANTUM 6.54-7.65 PART #46106300740 (S08-D10)	46106300740	$ -	4	$ -
897	5023	COUPLING 8IN QUANTUM 8.54-9.85 PN #461-08540960-000 (S08-D14)	461-08540960-000	$ -	1	$ -
898	5045	COUPLING 4IN QUANTUM 4.46-5.60 PN=461-04290535-000 (S08-D08)	461-04290535-000	$ -	11	$ -
899	5139	CLAMP REPAIR S/B 6.56-6.96 226-066307-000 SM/BL (S07-C08)	226-066307-000	$ -	1	$ -
900	5517	COUPLING 12IN QUAN 12.75-14.40 - 461-1275144 0000 (S08-E03)	461-1275144 0000	$ -	1	$ -
901	5606	CLAMP REPAIR D/B 16 X 15 IN SS - 263-171515-000 (S07-E02)	263-171515-000	$ -	1	$ -
902	5769	CLAMP REPAIR 6x15IN SINGLE BAND - 6.56-6.96 226-066315-000 (S07-C09)	226-066315-000	$ -	1	$ -
903	5833	COUPLING 16IN REPAIR HYMAX		$ -	1	$ -
904	5907	COUPLING 16 IN MAXI-FIT - 74MFC1728 (S09-E09)	74MFC1728	$ -	1	$ -
905	5940	CLAMP 20" BELL JOINT LEAK CLAMP SMITH BLAIR # 274-2160-000 (S07-E05)	274-2160-000	$ -	1	$ -
906	5941	CLAMP 24" BELL JOINT LEAK CLAMP SMITH BLAIR# 274-2580-000 (S07-E06)	274-2580-000	$ -	1	$ -
907	5942	CLAMP 3/4" X 3" FULL CIRCLE 244-008803-000 *16 PER BX* (S07-C01)	244-008803-000	$ -	25	$ -
908	5943	CLAMP 3/4"X 6" FULL CIRCLE 244-008806-001 (S07-C02)	244-008806-001	$ -	1	$ -
909	5962	GASKET FOR 12" COUPLING #33820 BLUE (S11-C13)		$ -	1	$ -
910	5976	COUPLING HYMAX 6IN 6.42-7.68 (S08-D11)		$ -	2	$ -
911	6094	COUPLING 4" 4.22-5.60 #242-0550 (S08-D09)	242-0550	$ -	4	$ -
912	6095	COUPLING 6" 6.28-7.80 #242-0760 (S08-D12)	242-0760	$ -	2	$ -
913	6096	COUPLING 8" 8.40-9.75 #242-0960 (S08-D13)	242-0960	$ -	2	$ -
914	6097	COUPLING 10" 10.50-12.12 #242-1200 (S08-D17)	242-1200	$ -	1	$ -
915	6098	COUPLING 12" 12.50-14.38 #242-1430 (S08-E04)	242-1430	$ -	1	$ -
916	6099	COUPLING 16" 17.32-19.20 #242-1920 (S08-E06)	242-1920	$ -	1	$ -
917		**14. SUBTOTAL**				**$ -**
918		**15. SCH 80 PIPE & ALL FITTINGS / SPEARS OR APPROVED EQUAL**				
919	557	COUPLING 6" SxS SCH80 PVC - 829-060 *SPEARS* (S17-A03)	829-060	$ -	8	$ -
920	669	REDUCER 1 1/4" X 1" SCH80 837-168 *25 BX* (S16-D22)	837-168	$ -	4	$ -
921	1026	REDUCER BUSHING 1 X 1/4" MXF SCH80 839-128 25/bx *SPEARS* (S16-E37)	839-128	$ -	1	$ -
922	1028	REDUCER BUSHING 1 X 1 1/4" MXF SCH80 839-168 25/bx *SPEARS* (S16-E38)	839-168	$ -	1	$ -
923	1053	NIPPLE 1-1/2 x 8IN TBE SCH80 - 886-080 *SPEARS* EA 25/BOX (S16-D01)	886-080	$ -	35	$ -
924	1059	NIPPLE 3/4 X CL TBE SCH80 PVC - PART #207-016 (S16-E33)	207-016	$ -	1	$ -
925	1060	NIPPLE 3/4 X 2IN TBE SCH80 PVC - PART #207-020 (S16-E34)	207-020	$ -	2	$ -
926	1061	NIPPLE 3/4 X 3IN TBE SCH80 PVC - PART #207-030 (S16-E32)	207-030	$ -	1	$ -
927	1062	NIPPLE 3/4 X 4IN TBE SCH80 PVC - PART #207-040 (S16-E31)	207-040	$ -	1	$ -
928	1063	NIPPLE 3/4 X 6IN TBE SCH80 PVC - PART #207-060 (S16-E30)	207-060	$ -	1	$ -
929	1064	NIPPLE 1IN X CL SCH80 PVC 884-005 *SPEARS* (S16-E05)	884-005	$ -	15	$ -
930	1065	NIPPLE 1IN X 2IN TBE SCH80 PVC - PART #210-020 (S16-D15)	210-020	$ -	1	$ -
931	1066	NIPPLE 1IN X 3IN TBE SCH80 PVC - PART #210-030 (S16-E03)	210-030	$ -	3	$ -
932	1067	NIPPLE 1IN X 4IN TBE SCH80 PVC - PART #210-040 (S16-D18)	210-040	$ -	1	$ -
933	1068	COUPLING 1IN SCH80 PVC GRAY - HOSE BARBxHOSE BARB (S16-E02)		$ -	1	$ -
934	1069	NIPPLE 1-1/4 IN X CL TBE SCH80 - 885-005 *SPEARS* (S16-D09)	885-005	$ -	1	$ -
935	1070	NIPPLE 1-1/4 X 2IN TBE SCH80 - PART #212-020 (S16-D10)	212-020	$ -	1	$ -
936	1071	NIPPLE 1-1/4 X 3IN TBE SCH80 - 212-030 (S16-D11)	212-030	$ -	2	$ -
937	1072	NIPPLE 1-1/2 X 2IN TBE SCH80 - PART #215-020 (S16-C17)	215-020	$ -	1	$ -
938	1073	NIPPLE 1-1/2 X 3IN TBE SCH80 - PART #215-030 (S16-D02)	215-030	$ -	3	$ -
939	1074	NIPPLE 1-1/2 X 4IN TBE SCH80 886-040 *SPEARS* (S16-C08)	886-040	$ -	1	$ -
940	1075	NIPPLE 2IN X CL TBE SCH80 PVC - PART #220-016 (S16-C05)	220-016	$ -	1	$ -
941	1076	NIPPLE 2IN X 3IN TBE SCH80 PVC 887-030 (S16-C02)	887-030	$ -	4	$ -
942	1077	NIPPLE 2IN X 4IN TBE SCH80 PVC - 887-040 *SPEARS* (S16-C03)	887-040	$ -	1	$ -
943	1078	NIPPLE 3IN X CL TBE SCH80 PVC - 889-005 (S16-A08)	889-005	$ -	7	$ -
944	1079	NIPPLE 4IN X CL TBE SCH80 PVC - 890-005 (S17-A08)	890-005	$ -	1	$ -
945	1080	ELL 90 1-1/2IN SLIP SCH80 PVC - 806-015 10/BX *SPEARS* (S16-C09)	806-015	$ -	36	$ -
946	1081	COUPLING 1-1/2IN SxS SCH80 PVC 10/BX 829-015 *SPEARS* (S16-C13)	829-015	$ -	17	$ -

ADDENDUM #2 - REVISED BID REPLY SPREADSHEET
E-BID #20120009

	A	B	E	G	H	I
947	**1082**	COUPLING 1-1/2IN FPTxFPT SCH80 - PVC #830-015 *SPEARS* (S16-C10)	830-015	$ -	1	$ -
948	**1083**	TEE 1-1/2IN SLIP SCH80 PVC - 801-015 *SPEARS* (S16-C15)	801-015	$ -	12	$ -
949	**1084**	UNION 2IN SCH80 PVC FPTxFPT 858-020 5/BX *SPEARS* (S16-B14)	858-020	$ -	2	$ -
950	**1085**	ELL 90 2-1/2IN SxS SCH80 PVC - PART #806-025 *SPEARS* (S16-B07)	806-025	$ -	1	$ -
951	**1086**	FLANGE 1-1/2IN SLIP FF SCH80 - 854-015 4-HOLE *SPEARS* (S16-C12)	854-015	$ -	12	$ -
952	**1087**	FLANGE 2IN SLIP FF SCH80 - 854-020 PVC 4-HOLE 10/BX *SPEARS* (S16-C01)	854-020	$ -	15	$ -
953	**1088**	FLANGE 3 IN SWIVEL SLIP SCH80 - 854-030 4 HOLE GRAY *SPEARS* (S16-A06)	854-030	$ -	1	$ -
954	**1089**	FLANGE 2-1/2IN SLIP FF SCH80 PVC 854-025 *SPEARS* (S16-B05)	854-025	$ -	1	$ -
955	**1091**	FLANGE 4IN SWIVEL SLIP SCH80 - 854-040 8 HOLE GRAY *SPEARS* (S17-A06)	854-040	$ -	31	$ -
956	**1092**	FLANGE 6IN SWIVEL SLIP SCH80 5/bx- 854-060 8-HOLE *SPEARS* (S17-A02)	854-060	$ -	71	$ -
957	**1150**	TEE 1" FIPT X FIPT SCH80 805-010 15/bx *SPEARS* (S16-E39)	805-010	$ -	13	$ -
958	**1151**	UNION 1" THREADED FIPT W/VITON SEALS SCH80 8058-010 15/bx *SPEARS* (S16-E40)	8058-010	$ -	3	$ -
959	**1156**	ADAPTER 1" M X HOSE BARB SCH80 1436-010 25/bx *SPEARS* (S16-E41)	1436-010	$ -	27	$ -
960	**1393**	ADAPTER MALE 1-1/4IN SCH80 PVC 10/bx- 836-012 *SPEARS* (S16-D07)	836-012	$ -	434	$ -
961	**1394**	ELL 45 DEG. 2-1/2IN SxS SCH80 - PVC 817-025 GRAY *SPEARS* (S16-B06)	817-025	$ -	1	$ -
962	**1395**	PIPE 2IN SCH80 PVC GRAY - 20FT LENGTHS (PR1-C01)		$ -	121	$ -
963	**1396**	PIPE 2-1/2IN SCH80 PVC GRAY - 20FT LENGTHS (PR1-I02)		$ -	1	$ -
964	**1408**	COUPLING 2IN SXS SCH80 PVC - 829-020 20/BX *SPEARS* (S16-B13)	829-020	$ -	57	$ -
965	**1409**	COUPLING 2-1/2IN SXS SCH80 PVC - 829-025 10/bx *SPEARS* (S16-B03)	829-025	$ -	1	$ -
966	**1410**	ELL 90 2IN SCH80 SxS PVC GRAY 25/bx- 806-020 *SPEARS* (S16-B09)	806-020	$ -	64	$ -
967	**1411**	ELL 45 DEG. 2IN SxS SCH80 PVC - 817-020 10/BX *SPEARS* (S16-B11)	817-020	$ -	23	$ -
968	**1412**	ADAPTER MALE 2IN MPTxS SCH80 - 836-020 10/bx *SPEARS* (S16-B16)	836-020	$ -	79	$ -
969	**1413**	ADAPTER MALE 2-1/2IN SCH80 PVC - 836-025 5/BX *SPEARS* (S16-B02)	836-025	$ -	12	$ -
970	**1414**	ADAPTER FEMALE 2IN SCH80 PVC - 835-020 10/bx *SPEARS* (S16-B12)	835-020	$ -	36	$ -
971	**1415**	ADAPTER FEMALE 2-1/2IN SCH80 - 835-025 5/BX *SPEARS* (S16-B01)	835-025	$ -	6	$ -
972	**1416**	WYE 2IN SxS SCH80 PVC - 875-020 *SPEARS* (S16-B08)	875-020	$ -	1	$ -
973	**1558**	ELL 90 6IN SXS SCH80 PVC - 806-060 *SPEARS* (S17-A01)	806-060	$ -	11	$ -
974	**1763**	COUPLING 4IN SxS SCH80 PVC - 829-040 *SPEARS* (S17-A07)	829-040	$ -	6	$ -
975	**1764**	ELL 90 4IN SxS SCH80 PVC - 806-040 *SPEARS* (S17-A05)	806-040	$ -	15	$ -
976	**1827**	COUPLING 2IN FPT X FPT SCH80 PVC 830-020 10/BX *SPEARS* (S16-B18)	830-020	$ -	1	$ -
977	**1970**	PLUG 1IN THRD SCH80 PVC - 850-010 *SPEARS* (S16-D17)	850-010	$ -	1	$ -
978	**2260**	REDUCER 1 X 1/2IN SxS SCH80-837-130 50/bx *SPEARS* (S16-E08)	837-130	$ -	36	$ -
979	**2275**	TEE 1/2IN SLIP SCH80 PVC - 801-005 25/bx *SPEARS* (S16-E25)	801-005	$ -	16	$ -
980	**2276**	TEE 3/4IN SLIP SCH80 PVC - 801-007 *SPEARS* (S16-E06)	801-007	$ -	21	$ -
981	**2277**	TEE 1IN SLIP SCH80 PVC - 801-010 15/bx *SPEARS* (S16-E01)	801-010	$ -	2	$ -
982	**2278**	ELL 90 DEG.1/2IN SxS SCH80 PVC 20/BX 806-005 *SPEARS* (S16-E20)	806-005	$ -	34	$ -
983	**2280**	ELL 90 1IN SxS SCH80 PVC - 806-010 25/BX *SPEARS* (S16-D16)	806-010	$ -	31	$ -
984	**2281**	TEE 1-1/4IN SxS SCH80 PVC - 801-012 10/bx *SPEARS* (S16-D06)	801-012	$ -	44	$ -
985	**2282**	ELL 45 DEG.1/2IN SxS SCH80 PVC - 817-005 *SPEARS* (S16-E27)	817-005	$ -	22	$ -
986	**2283**	ELL 45 DEG.3/4IN SxS SCH80 PVC - 817-007 *SPEARS* (S16-E12)	817-007	$ -	8	$ -
987	**2284**	ELL 45 DEG. 1IN SxS SCH80 PVC - 817-010 *SPEARS* (S16-D20)	817-010	$ -	9	$ -
988	**2285**	COUPLING 1/2IN SxS SCH80 PVC - 829-005 *SPEARS* (S16-E15)	829-005	$ -	19	$ -
989	**2286**	COUPLING 3/4IN SxS SCH80 PVC - 829-007 *SPEARS* (S16-E24)	829-007	$ -	11	$ -
990	**2287**	COUPLING 1IN SxS SCH-80 PVC - 829-010 25/BX *SPEARS* (S16-D21)	829-010	$ -	24	$ -
991	**2288**	ADAPTER FEMALE 1/2IN SCH80 PVC - 835-005 *SPEARS* (S16-E19)	835-005	$ -	15	$ -
992	**2289**	ADAPTER FEMALE 3/4IN SCH80 PVC - 835-007 25/bx *SPEARS* (S16-E11)	835-007	$ -	14	$ -
993	**2290**	ADAPTER FEMALE 1IN SCH80 PVC - 835-010 *SPEARS* (S16-D19)	835-010	$ -	14	$ -
994	**2291**	ADAPTER FEMALE 1-1/2IN SCH80 - 835-015 *SPEARS* (S16-D03)	835-015	$ -	11	$ -
995	**2292**	ADAPTER MALE 1/2IN SCH80 PVC - 836-005 *SPEARS* (S16-E18)	836-005	$ -	36	$ -
996	**2293**	ADAPTER MALE 3/4IN SCH80 PVC - 836-007 *SPEARS* (S16-E10)	836-007	$ -	24	$ -
997	**2294**	ADAPTER MALE 1IN SCH80 PVC - 836-010 20/BX *SPEARS* (S16-E04)	836-010	$ -	86	$ -
998	**2295**	ADAPTER MALE 1-1/2IN SCH80 PVC - 836-015 10/BX *SPEARS* (S16-D04)	836-015	$ -	958	$ -
999	**2296**	REDUCER 3/4 x 1/2IN SCH80 PVC- 837-101 50/bx *SPEARS* (S16-E14)	837-101	$ -	15	$ -
1000	**2297**	REDUCER 1x3/4IN SxS SCH80 PVC 50/BX 837-131 *SPEARS* (S16-E09)	837-131	$ -	31	$ -
1001	**2298**	REDUCER 1-1/2x3/4IN SxS SCH80 - 837-210 *SPEARS* (S16-E26)	837-210	$ -	12	$ -
1002	**2299**	REDUCER 2x 3/4IN SxS SCH80 PVC - 837-248 *SPEARS* (S16-C06)	837-248	$ -	2	$ -
1003	**2300**	REDUCER 2 X 1IN SxS SCH80 PVC - 837-249 *SPEARS* (S16-E22)	837-249	$ -	8	$ -
1004	**2301**	REDUCER 2 X 1-1/2IN SxS SCH80 - 837-251 10/BX *SPEARS* (S16-E23)	837-251	$ -	64	$ -
1005	**2340**	TEE 2IN SLIP SCH80 PVC - 801-020 *SPEARS* (S16-B10)	801-020	$ -	13	$ -
1006	**2341**	UNION 1-1/2IN SxS SCH80 PVC - 8057-015 10/BX *SPEARS* (S16-C14)	8057-015	$ -	62	$ -
1007	**2444**	UNION 1IN SxS SCH80 PVC - 8057-010 (S16-D14)	8057-010	$ -	23	$ -
1008	**2463**	UNION 1/2IN SxS SCH 80 8057-005 20/BX (S16-E36)	8057-005	$ -	6	$ -
1009	**2464**	UNION 3/4IN SxS SCH80 PVC - 34P8U 8057-007 (S16-E35)	8057-007	$ -	11	$ -
1010	**2466**	UNION 2IN SxS SCH80 PVC 2P8U 857-020 5/BX *SPEARS* (S16-C04)	857-020	$ -	24	$ -
1011	**2545**	ELL 90 3/4IN SCH80 PVC GRAY-806-007 20/bx *SPEARS* (S16-E07)	806-007	$ -	23	$ -
1012	**2546**	ELL 45 DEG 1-1/2IN SxS SCH80 - 817-015 *SPEARS* (S16-C16)	817-015	$ -	15	$ -
1013	**2588**	COUPLING 1-1/4IN SxS SCH80 PVC - 829-012 10/BX *SPEARS* (S16-D08)	829-012	$ -	111	$ -
1014	**2846**	ADAPTER FEMALE 1-1/4IN SCH80 835-012 10/BX (S16-D12)	835-012	$ -	7	$ -
1015	**3043**	PIPE 3/4IN SCH80 PVC - 20FT LENGTHS GRAY (PR1-E01)		$ -	141	$ -
1016	**3044**	PIPE 1IN SCH80 PVC - GRAY 20FT LENGTHS (PR1-F02)		$ -	91	$ -
1017	**3202**	PIPE 1-1/2IN SCH80 PVC (PR1-G01)		$ -	342	$ -
1018	**3210**	ELL 90 1-1/2IN SxF SCH80 PVC - 807-015 *SPEARS* (S16-C11)	807-015	$ -	2	$ -
1019	**3211**	ELL 90 2IN SxF SCH80 PVC - 807-020 *SPEARS* (S16-B15)	807-020	$ -	1	$ -
1020	**3471**	PIPE 1-1/4IN SCH80 PVC GRAY - 20FT LENGTHS (PR1-F01)		$ -	479	$ -

	A	B	E	G	H	I
1021	3802	CROSS 1-1/2IN SLIP SCH80 PVC PART #820-015 (S16-C07)	820-015	$ -	1	$ -
1022	5018	NIPPLE 2 1/2 X CL TBE SCH80 PVC (S16-B04)		$ -	1	$ -
1023	5155	PIPE 1IN CPVC SCH80 20FT LNG - PART #3670-010 (PR1-H02)		$ -	5	$ -
1024	5156	PIPE 3/4IN CPVC SCH80 20FT LNG - 3670-007 (PR1-H03)		$ -	11	$ -
1025	5176	ELL 90 1-1/4IN SCH80 PVC SxS - #806-012 10/bx *SPEARS* (S16-D05)	806-012	$ -	145	$ -
1026	5177	ELL 45 DEG.1-1/4IN SXS SCH80 - PVC PART #817-012 *SPEARS* (S16-D13)	817-012	$ -	1	$ -
1027	5196	PIPE 4IN SCH80 PVC 20FT LENGTH (PR2-C01)		$ -	121	$ -
1028	5225	ELL 3IN 90 SCH80 SxS PVC - 806-030 *SPEARS* (S16-A02)	806-030	$ -	1	$ -
1029	5226	UNION 3IN SCH80 SxS VITON O-RG - 857-030 *SPEARS* (S16-A07)	857-030	$ -	1	$ -
1030	5228	ELL 45 DEG. 3IN SXS SCH80 PVC - 817-030 *SPEARS* (S16-A03)	817-030	$ -	1	$ -
1031	5247	PIPE 1/2IN CPVC SCH80 20FT LNG - 3670-005 (PR1-H04)		$ -	1	$ -
1032	5250	PIPE 2IN CPVC SCH80 20FT LNG - 3670-020 (PR1-H01)		$ -	21	$ -
1033	5282	PIPE 3IN SCH80 PVC - 0503080 (PR2-C02)		$ -	1	$ -
1034	5283	PIPE 6IN SCH80 PVC - 0506080 (PR2-B01)		$ -	211	$ -
1035	5284	PIPE 8IN SCH80 PVC - PART #0508080		$ -	1	$ -
1036	5285	VALVE 1/2IN BALL SCH80 PVC SxS - 2622-005G (S16-E42)	2622-005G	$ -	11	$ -
1037	5287	REDUCER 1/2 X 1/4IN SxF SCH80 - 838-072 *SPEARS* (S16-E16)	838-072	$ -	11	$ -
1038	5288	REDUCER 3/4 X 1/4IN SxF SCH80 - 838-098 *SPEARS* (S16-E17)	838-098	$ -	5	$ -
1039	5289	PIPE 1/2IN SCH80 PVC - 0505080 (PR1-E02)		$ -	111	$ -
1040	5363	TEE 3IN SxSxS SCH 80 801-030 (S16-A01)	801-030	$ -	1	$ -
1041	5365	VALVE 3IN BUTTERFLY FLANGED - SCH80 #251311-030	251311-030	$ -	1	$ -
1042	5366	ELL 3IN 22-1/2 DEG. SCH80		$ -	1	$ -
1043	5367	COUPLING 3IN SxS SCH80 829-030 5/BX *SPEARS* (S16-A05)	829-030	$ -	2	$ -
1044	5369	REDUCER 8IN X 6IN SCH80		$ -	1	$ -
1045	5370	COUPLING 8IN SxS SCH80		$ -	1	$ -
1046	5371	TEE 4IN SxSxS SCH80 801-040	801-040	$ -	1	$ -
1047	5372	REDUCER 4IN X 1IN SxTHRD SCH80 - 4IN SLIPx1IN THRD		$ -	1	$ -
1048	5373	TEE 8IN W/8IN SPIGOT CLEAN OUT - AND PLUG-SCH80		$ -	1	$ -
1049	5385	ADAPTER 4IN FEMALE SCH80 PVC - PART #835-040 *SPEARS*	835-040	$ -	1	$ -
1050	5386	ELL 45 DEG 4IN SCH80 PVC - PART #817-040 *SPEARS*	817-040	$ -	1	$ -
1051	5513	CROSS 3IN SLIP SCH80		$ -	1	$ -
1052	5807	REDUCER 2IN SLIP X 3/4IN FPT - SCH80 PVC		$ -	1	$ -
1053	5819	ADAPTER 4IN MALE SCH80 836-040 *SPEARS* (S17-A09)	836-040	$ -	11	$ -
1054	5824	REDUCER 2 X 1/2IN SCH80 SxF - PVC BUSHING		$ -	1	$ -
1055	6008	REDUCER 1 1/2 X 1 1/4 SCH80 25/BX 837-212 *SPEARS* (S16-E21)	837-212	$ -	174	$ -
1056		**15. SUBTOTAL**				**$ -**
1057		**16. STAINLESS STEEL**				
1058	588	INSERT 3/4IN FOR POLY TUBING - 51 SS (S06-D01)	51 SS	$ -	52	$ -
1059	589	INSERT 1IN S.S.FOR POLY TUBING - INSERT -52 100/B0X (S06-D03)	52 SS	$ -	1977	$ -
1060	590	INSERT 1-1/2IN FOR POLY TUBING - 54 SS (S06-D02)	54 SS	$ -	1	$ -
1061	591	INSERT 2IN SS FOR POLY TUBING - INSERT-55 (S06-D04)	55 SS	$ -	34	$ -
1062	1261	NIPPLE 1 1/4" X CL 316 SS (S10-C17)	316 SS	$ -	11	$ -
1063	1696	PIPE 2IN SCH40 SS 316/316L (PR1-I01)	316 SS	$ -	1	$ -
1064	2009	NIPPLE 2x6 SCHD 40 - 316 S.S. (S15-B28)	316 S.S.	$ -	2	$ -
1065	2753	NIPPLE 2X6IN SCH/40 - 304/SS (S15-B27)	304 S.S.	$ -	1	$ -
1066	5917	NIPPLE 1 1/2 X 3IN S.S. (S15-B29)		$ -	1	$ -
1067		**16. SUBTOTAL**				**$ -**
1068		**17. TAP SADDLES, ALL TYPES / SMITH-BLAIR OR APPROVED EQUAL**				
1069	746	SADDLE 2"x1" TAP S/B 2.35-2.56 315-025608-000 (S08-B01)	315-025608-000	$ -	1	$ -
1070	747	SADDLE TAP 3" X 1" S/B 2.97 - 3.54 315-035408-000 (S08-B02)	315-035408-000	$ -	1	$ -
1071	748	SADDLE TAP 3" X 1" D/B 2.97 - 3.54 317-035408-000 (S08-B03)	317-035408-000	$ -	1	$ -
1072	749	SADDLE TAP 3-4" X 2" D/B 3.74-4.13 317-041314-000 (S08-B04)	317-041314-000	$ -	1	$ -
1073	750	SADDLE 4 X 1 TAP S/B 3.74-4.55 315-00045508-000 (S08-B06)	315-00045508-000	$ -	11	$ -
1074	754	SADDLE 4" X 1-1/2" TAP D/B 5.00 - 5.63 317-056312-000 (S08-B08)	317-056312-000	$ -	1	$ -
1075	755	SADDLE 4" X 2" TAP S/B 4.74 - 5.63 315-056314-000 (S08-B09)	315-056314-000	$ -	3	$ -
1076	756	SADDLE TAP 6"x1" S/B 5.94 - 6.90 315-066308-000 *8 PER BX* (S07-D14)	315-066308-000	$ -	171	$ -
1077	759	SADDLE 6 X 1-1/2 TAP S/B 6.84-7.60 315-076012-000 (S08-B10)	315-076012-000	$ -	1	$ -
1078	760	SADDLE 6" X 2" TAP D/B 6.84 - 7.60 317-076014-000 (S08-B12)	317-076014-000	$ -	1	$ -
1079	761	SADDLE 6" X 2" TAP S/B 6.84 - 7.60 315-076014-000 (S08-B11)	315-076014-000	$ -	3	$ -
1080	766	SADDLE 8"x2" TAP SB 8.54 - 10.10 315-00101014-000 (S08-B14)	315-00101014-000	$ -	1	$ -
1081	767	SADDLE 8" X 2" TAP D/B 8.54 - 10.10 317-101014-000 (S08-B15)	317-101014-000	$ -	1	$ -
1082	769	SADDLE 10" X 1-1/2" TAP D/B - 10.75-11.10 317-111012 (S08-C01)	317-111012	$ -	1	$ -
1083	770	SADDLE 10" X 2" TAP D/B 10.64-12.12 317-121214-000 (S08-C02)	317-121214-000	$ -	1	$ -
1084	771	SADDLE 10" X 2" TAP S/B 10.64 - 12.12 315-121214-000 (S08-C03)	315-121214-000	$ -	1	$ -
1085	772	SADDLE 12"x 1" TAP 12.62 - 14.32 SB 315-00143208-000 (S08-C04)	315-00143208-000	$ -	15	$ -
1086	773	SADDLE 12" X 1" TAP D/B 12.62 - 14.32 317-143208-000 (S08-C05)	317-143208-000	$ -	1	$ -
1087	774	SADDLE 12" X 1-1/2" TAP D/B 12.62 - 14.32 317-143212-000 (S08-C06)	317-143212-000	$ -	1	$ -
1088	775	SADDLE 12" X 1-1/2" TAP D/B 12.75 - 13.20 317-132012-000 (S08-C07)	317-132012-000	$ -	1	$ -
1089	776	SADDLE 12" X 2" TAP D/B 12.62 - 14.32 317-143214-000 (S08-C08)	317-143214-000	$ -	4	$ -
1090	779	SADDLE 16" X 1" TAP D/B 17.40 - 18.88 317-188808-000 (S08-C11)	317-188808-000	$ -	1	$ -
1091	780	SADDLE 16" X 1-1/2" TAP D/B 15.95 - 17.25 317-172512-000 (S08-C12)	317-172512-000	$ -	1	$ -
1092	781	SADDLE 16-18" X 1-1/2" TAP D/B 17.40-18.88 317-188812-000 (S08-D01)	317-188812-000	$ -	1	$ -
1093	782	SADDLE 16" X 2" TAP D/B 17.40-18.88 317-188814-000 (S08-D02)	317-188814-000	$ -	1	$ -
1094	783	SADDLE 18" X 1" TAP D/B 19.00-20.50 JCM 645320 (S08-D03)	645320	$ -	1	$ -

	A	B	E	G	H	I
1095	785	SADDLE 20" X 1" TAP D/B 21.35 - 22.60 JCM 406-2260X08IP (S08-D04)	406-2260X08IP	$ -	1	$ -
1096	786	SADDLE 20" X 2" TAP D/B 21.35 - 22.60 JCM 406-2260X14IP (S08-D05)	406-2260X14IP	$ -	1	$ -
1097	787	SADDLE 24-26" X 1" TAP D/B 25.50-26.50 JCM 406-2650X08IP (S08-D06)	406-2650X08IP	$ -	1	$ -
1098	1308	SADDLE TAP 3-4" X 2" S/B 3.74 - 4.55 315-00045514-000 (S08-B05)	315-00045514-000	$ -	3	$ -
1099	1757	SADDLE 14" X 2" TAP D/B 14.73 - 15.65 317-156514-000 (S08-C09)	317-156514-000	$ -	1	$ -
1100	2045	SADDLE 8"x1" TAP S/B 8.54 - 10.10 315-101008-000 (S07-D13)	315-101008-000	$ -	36	$ -
1101	2754	SADDLE TAP 4"x1" S/B 4.74 - 5.63 315-056308-000 (S08-B07)	315-056308-000	$ -	8	$ -
1102	3766	SADDLE TAP 16"x1" S/B FORD 17.40-18.40 FC-202-1840-IP4 (S08-C10)	FC-202-1840-IP4	$ -	1	$ -
1103	5293	SADDLE 6"X1" TAP D/B 5.94 - 6.90 317-069008-000	317-069008-000	$ -	1	$ -
1104	5528	SADDLE 10" x 1" TAP S/B 10.64 - 12.12 315-121208-000 (S08-B16)	315-121208-000	$ -	1	$ -
1105	5803	SADDLE 6"x 2" TAP D/B 5.94 - 6.90 317-069014-000	317-069014-000	$ -	1	$ -
1106	5916	SADDLE 2 1/2" X 1 1/2" S/B 2.44 - 2.91 315-029112-000 (S08-B13)	315-029112-000	$ -	1	$ -
1107		**17. SUBTOTAL**				**$ -**
1108						
1109		**18. TOOLS, SHOVELS, RAKES / REED, 3M, RAZORBACK OR APPROVED EQUAL**				
1110	170	WRENCH FOR LOCKING LID - VALVE BOX 59WL (B02-21)	59WL	$ -	4	$ -
1111	231	SPRING 32MM FOR JAW WRENCH (B02-78)		$ -	1	$ -
1112	232	JAW 1-1/4IN FOR JAW WRENCH - ONE HANDED 32MM (B02-77)		$ -	1	$ -
1113	275	BLADE 1-1/2IN SCISSOR SHEAR - REED #SC1/PIPE CUTTER (B04-24)	REED #SC1	$ -	1	$ -
1114	335	BLADE FOR 18IN PVC SAW - PPS18B REED *PER EA.* (B13-C01)	PPS18B	$ -	7	$ -
1115	336	SAW HAND 18IN FOR PVC - PPS18 REED *PER EA.* (B13-D01)	PPS18	$ -	7	$ -
1116	809	CURB BX BSE/ARCH PAT 1 1/4X5FT - W/27/32IN BRASS PLUG (S09-A05)		$ -	1	$ -
1117	810	STATIONARY ROD FOR CURB VALVE - 5FT 59ROD60 FORD (S09-A06)	59ROD60	$ -	1	$ -
1118	811	HANDLE T-SHUT OFF ROD 5FT - FORD 59SROD5	59SROD5	$ -	1	$ -
1119	820	HOOK MANHOLE COVER - P553 (S09-B13)	P553	$ -	3	$ -
1120	822	PROBE FIBERGLASS W/TEE HANDLE - 4FT (S09-B15)		$ -	31	$ -
1121	823	WRENCH ADJUSTABLE HYDRANT - AHW (S09-B16)		$ -	8	$ -
1122	1108	SHOVEL ROUND-POINT RAZORBACK - 65UF45520 (SW-04)	65UF45520	$ -	68	$ -
1123	1110	SHOVEL SQUARE-POINT RAZORBACK - 65UF44124 (SW-10)	65UF44124	$ -	23	$ -
1124	2018	PIN ASSEMBLY FOR JAW WRENCH - 92727 MW-PS (B02-75)		$ -	1	$ -
1125	2019	PIN 3/16IN SPRIAL F/JAW WRENCH - 30008 (B02-76)		$ -	1	$ -
1126	2092	CUTTER PVC PIPE 1-1/2IN - REED RS1 (B12-C01)	RS1	$ -	19	$ -
1127	2750	WRENCH VALVE KEY TELESCOPIC - 2x4-8FT STEEL (S09-A07)		$ -	1	$ -
1128	2785	CRIMPING TOOL 3/4-1 IN STEEL - PES1CTS FOR POLY (B01-H10)		$ -	1	$ -
1129	2830	BLADE 1-1/2IN RATCHET SHEARS - RS-1B REED (B12-C02)	RS-1B	$ -	21	$ -
1130	3168	HANDLE POST HOLE DIGGER - 72/IN WOOD (SW-14)		$ -	1	$ -
1131	3259	BLADE 2IN RATCHET SHEARS REED - RS2 REED (B04-23)	RS2	$ -	4	$ -
1132	5015	WRENCH VALVE OPERATING 2IN SQ. X 6FT LONG (S09-C11)		$ -	2	$ -
1133	5767	HOOK MANHOLE 36IN (S09-B14)		$ -	6	$ -
1134		**18. SUBTOTAL**				**$ -**
1135		**19. VALVES/GATE, STEEL/CLOW,DEZURIK, KENNEDY OR APPROVED EQUAL**				
1136	988	VALVE 2IN GATE KENNEDY FG#4597 - 200W / IRON (S11-C19)	4597 - 200W	$ -	1	$ -
1137	989	VALVE 4IN PLUG DEZURIK - FIG118.F.6.RS26.ANG (S12-E06)	FIG118.F.6.RS26.ANG	$ -	1	$ -
1138	990	VALVE 4IN CHECK FLANGED (S12-E07)		$ -	1	$ -
1139	991	VALVE 4IN GATE F6100 MJ - R/S (S12-E08)	F6100 MJ - R/S	$ -	7	$ -
1140	992	VALVE 6IN GATE F6100 MJ - R/S L/ACC (S12-E09)	F6100 MJ - R/S	$ -	3	$ -
1141	994	VALVE 6" GATE F6106 MJ / FLANGE (S12-E10)	F6106 MJ / FLANGE	$ -	1	$ -
1142	995	VALVE 8IN GATE F6100 MJ - R/S (S12-E11)	F6100 MJ - R/S	$ -	3	$ -
1143	1789	VALVE 2IN GATE/RW F-THD. IRON - F6103 CLOW (S11-C20)	F6103	$ -	8	$ -
1144	2093	VALVE 10IN GATE F6100 MJ R/S (S12-E13)	F6100 MJ R/S	$ -	1	$ -
1145	2214	VALVE 12IN GATE F6100 MJ - R/S (S12-E12)	F6100 MJ - R/S	$ -	3	$ -
1146	2722	VALVE 12IN PLUG W/GEAR & 2NUT - 10785901052255 (S10-E09)	10785901052255	$ -	1	$ -
1147	4207	VALVE 3IN FLGED PLUG DEZURIK W BURIED SERV ADAPTER (S12-E04)		$ -	1	$ -
1148	4208	VALVE 2IN FLANGED PLUG DEZURIK W/BURIED SERV. ADAPT (S12-E02)		$ -	1	$ -
1149	4209	VALVE 3IN FLANGED KENNEDY SPRING & LEVER (S12-E03)		$ -	1	$ -
1150	4210	VALVE 2IN CHECK FLANGED KENNEDY SPRING & LEVER (S12-E01)		$ -	1	$ -
1151	5374	VALVE 3IN GATE F6100 MJ RW L/ACC - R/S (S12-E05)	F6100 MJ RW L/ACC - R/S	$ -	1	$ -
1152	5766	VALVE 16IN MJ GATE - F6100 W/SQ OPERATING NUT	F6100	$ -	1	$ -
1153	5773	VALVE 6IN TAPPING F6114 MJ RW	F6114 MJ RW	$ -	1	$ -
1154	5785	VALVE 3IN GATE F6102 R/S - FLANGED W/HAND WHEEL	F6102 R/S	$ -	1	$ -
1155	5789	VALVE 6IN CHECK SPR & LVR - KENNEDY #106LS	106LS	$ -	1	$ -
1156	5790	VALVE 6IN PLUG DEZURIK #F118N - FLANGED W/2IN OP NUT	F118N	$ -	1	$ -
1157	5821	VALVE 8IN DEZURIK PLUG FLANGED - 2IN OP NUT/#F118N	F118N	$ -	1	$ -
1158	5841	VALVE 4IN KENNEDY SPRING/LEVER - FLANGED STYLE 106SL	106SL	$ -	1	$ -
1159	6092	VALVE 2 1/2" GATE/RW THRD F6103 CLOW (S11-C21)	F6103	$ -	1	$ -
1160		**19. SUBTOTAL**				**$ -**
1161						
1162		**20. NO-LEAD BRASS ITEMS / FORD, MUELLER OR APPROVED EQUAL**				
1163	10	ADAPTER HYD 2 1/2" x 2" FXM SWIVEL (S06-B33)		$ -	5	$ -

ADDENDUM #2 - REVISED BID REPLY SPREADSHEET
E-BID #20120009

	A	B	E	G	H	I
1164	**283**	VALVE SWING CHECK 1 1/2" BRASS M31 5 PER BX (S06-F08)	M31	$ -	553	$ -
1165	**566**	VALVE 1-1/2IN BALL MxFL - BF83-666W BRASS (S06-E39)	BF83-666W	$ -	1	$ -
1166	**567**	VALVE 2IN BALL MIPxMF LW BRASS - BF83-77W FORD (S06-E41)	BF83-77W	$ -	2	$ -
1167	**568**	CORP 1-1/2IN STOP MPTxCTS/PJ - BF1100-6 (S06-E40)	BF1100-6	$ -	0	$ -
1168	**569**	BALL CORP 1-1/2IN MxF - FB1700-6 (S06-D05)	FB1700-6	$ -	1	$ -
1169	**570**	BALL CORP 2IN MxF BRASS - FB1700-7 *2 PER BX* (S06-E38)	FB1700-7	$ -	8	$ -
1170	**578**	BACKFLOW 3/4IN VAC BRKR 8B07 - WATTS EDP# 0061992 (S06-E45)	8B07 / 61992	$ -	7	$ -
1171	**592**	NIPPLE 3/4xCL TBE BRASS - 2012-001 (S06-E26)	2012-001	$ -	112	$ -
1172	**593**	NIPPLE 1IN X CL BRASS - 2016-001 (S06-E23)	2016-001	$ -	40	$ -
1173	**594**	NIPPLE 1IN x 3IN BRASS TBE - 2016-300 (S06-E22)	2016-300	$ -	32	$ -
1174	**595**	NIPPLE 1-1/2IN x CL BRASS - 2024-001 (S06-E17)	2024-001	$ -	10	$ -
1175	**596**	NIPPLE 1-1/2 x 3IN BRASS - 2024-300 (S06-E18)	2024-300	$ -	8	$ -
1176	**597**	NIPPLE 2IN X CL BRASS TBE - 2032-001 (S06-E21)	2032-001	$ -	26	$ -
1177	**598**	NIPPLE 2INx4IN TBE BRASS - 2032-400 (S06-E14)	2032-400	$ -	9	$ -
1178	**599**	VALVE 3/4IN GATE FPT BRASS - 3407GM300 (S06-F02)	3407GM300	$ -	300	$ -
1179	**600**	VALVE 1IN GATE FPT BRASS - 200 WOG *5 PER BX* (S06-C01)	200 WOG	$ -	0	$ -
1180	**601**	VALVE 1-1/2IN GATE FPT BRASS - #200 WOG FPT *4 PER BX* (S06-C02)	200 WOG	$ -	5	$ -
1181	**602**	VALVE 2IN GATE FPT BRASS - #200 WOG FPT *2 PER BX* (S06-C03)	200 WOG	$ -	1	$ -
1182	**603**	VALVE 3/4IN HOSE BIBB BRASS - 3407HBM (S06-C11)	3407HBM	$ -	430	$ -
1183	**604**	VALVE 1IN HOSE BIBB BRASS - #107-265/T-531 MALE (S06-C12)	107-265/T-531	$ -	0	$ -
1184	**605**	VALVE 3/4IN STR DUAL CK BRASS - HHS31-323 FORD *8 PER BX* (S06-D22)	HHS31-323	$ -	2055	$ -
1185	**606**	VALVE 1IN STRAIGHT DUAL CHECK - BRASS FORD#HHS31-344 (S06-D23)	HHS31-344	$ -	20	$ -
1186	**607**	CORP 1IN STOP BRASS - CTS/PJ X TAPER MPT		$ -	0	$ -
1187	**610**	VALVE 3/4X5/8IN ANGLE KEY - KV13-332W BRASS *12 PER BX* (S06-D28)	KV13-332W	$ -	45	$ -
1188	**611**	VALVE 3/4X3/4IN ANGLE KEY - KV43-332WG BRASS *8 PER BX* (S06-D32)	KV43-332WG	$ -	3	$ -
1189	**613**	VALVE 1IN ANGLE KEY BRASS - KV13-444W *5 PER BX* (S06-D26)	KV13-444W	$ -	32	$ -
1190	**614**	VALVE 1X1IN ANGLE KEY - BRASS P/N-KV43-444WG *5 PER BX* (S06-D27)	KV43-444WG	$ -	2	$ -
1191	**615**	COUPLING 3/4IN COMP/SINGLE - C84-33G MPJxCTS/PJ BR 24 bx (S06-D15)	C84-33G	$ -	7	$ -
1192	**616**	COUPLING 1IN COMP/SINGLE BRASS C84-44G MPTxCTS/PJ 14 PER BX (S06-D17)	C84-44G	$ -	44	$ -
1193	**618**	COUPLING 3/4IN DOUBLE COMP - CTS/PJ #C44-33 BRASS	C44-33G	$ -	0	$ -
1194	**620**	COUPLING 2IN COMP DBL GRIP/JNT - BRASS #C44-77G FORD (S06-D09)	C44-77G	$ -	2	$ -
1195	**626**	METER COUPLING 3/4IN BRASS - PLUMBERS PIECES (S06-C17)		$ -	75	$ -
1196	**627**	METER COUPLING 1 IN BRASS - PLUMBERS PIECE (S06-C18)		$ -	35	$ -
1197	**629**	TEE 1IN BRASS FPT (S06-C19)		$ -	13	$ -
1198	**630**	ELL 90 2IN ST FxMPT BRASS - 30209E (S06-C23)	30209E	$ -	3	$ -
1199	**631**	REDUCER 1X3/4IN BRASS FXM/THD - MUELLER/METER (S06-E31)		$ -	36	$ -
1200	**633**	REDUCER 1-1/2 X 1IN MPTxFPT - BRASS (S06-E30)		$ -	118	$ -
1201	**634**	REDUCER 2-1/2IN x 2IN MxF - BRASS BUSHING (S06-E33)		$ -	5	$ -
1202	**635**	ADAPTER HYD 2 1/2" X 2" BRASS - MNST (S06-B38)		$ -	25	$ -
1203	**636**	ADAPTER HYD 2 1/2" x 3/4" BRASS - FNST X MIPT (S06-B34)		$ -	3	$ -
1204	**637**	ADAPTER HYD 2 1/2" X 1" BRASS (S06-B35)		$ -	3	$ -
1205	**638**	ADAPTER HYD 2 1/2" x 1 1/2" - BRASS (S06-B36)		$ -	0	$ -
1206	**639**	ADAPTER HYD 2 1/2" X 2" BRASS FXM (S06-B37)		$ -	3	$ -
1207	**644**	HOSE NOZZLE 2 1/2" BRASS AMLOK 84-20-3 (S06-B31)	84-20-3	$ -	1	$ -
1208	**651**	RESETTER COPPER 5/8 x 3/4 x 7 - V42-7W (S06-F03)	V42-7W	$ -	114	$ -
1209	**652**	RESETTER COPPER 5/8 x 3/4 x 9 - V42-9W FORD (S06-F04)	V42-9W	$ -	23	$ -
1210	**653**	RESETTER COPPER 5/8 X 3/4 X 12 V42-12W (S06-F06)	V42-12W	$ -	18	$ -
1211	**654**	RESETTER COPPER 1 X 10IN - FORD V44-10W (S07-E13)	V44-10W	$ -	0	$ -
1212	**655**	RESETTER COPPER 1 X 12IN - FORD V44-12W (S07-E14)	V44-12W	$ -	0	$ -
1213	**1198**	NIPPLE 1/4" X 2" BRASS 2271-419 (S06-C38)	2271-419	$ -	3	$ -
1214	**1307**	BALL 2IN CURB STOP FXF BRASS - B11-77W FORD *2 PER BX* (S06-E43)	B11-77W	$ -	4	$ -
1215	**1377**	NIPPLE 1 X 36IN BRASS TBE (S06-E03)		$ -	4	$ -
1216	**1378**	NIPPLE 1 1/2 X 36IN BRASS TBE (S06-E04)		$ -	1	$ -
1217	**1379**	NIPPLE 2IN X 3IN BRASS TBE - 2032-300 (S06-E15)	2032-300	$ -	27	$ -
1218	**1380**	ELL 90 DEG.3/4IN FPTxFPT BRASS - 4501-150 (S06-C27)	4501-150	$ -	0	$ -
1219	**1381**	ELL 90 1IN FPT X FPT - BRASS (S06-C28)		$ -	11	$ -
1220	**1382**	ELL 1-1/2IN 90 FXF - BRASS (S06-C21)		$ -	0	$ -
1221	**1383**	ELL 90 2IN FXF BRASS - 4501-400 (S06-C24)	4501-400	$ -	5	$ -
1222	**1572**	ADAPTER METER 1 X 3/4 IN MXF - BRASS #3907A24 PER PR. (S06-E37)	3907A24	$ -	0	$ -
1223	**1573**	REDUCER 2 X 1-1/2IN MxF BRASS - HEX BUSHING (S06-E32)		$ -	8	$ -
1224	**1606**	REDUCER 1 X 3/4IN MPTxFPT - BRASS BUSHING (S06-E28)		$ -	69	$ -

ADDENDUM #2 - REVISED BID REPLY SPREADSHEET
E-BID #20120009

	A	B	E	G	H	I
1225	**1640**	COUPLING 5/8 X 3/4IN METER - C31-23 Ford BRASS (S06-E36)	C31-23	$ -	2	$ -
1226	**1655**	REDUCER 1 1/4X1IN MXF/THD - BRASS (S06-E29)		$ -	7	$ -
1227	**1656**	NIPPLE 3/4 X 36IN BRASS TBE - 2012-3600 (S06-E02)	2012-3600	$ -	1	$ -
1228	**1657**	NIPPLE 2 X 36IN BRASS TBE - 2032-3600 (S06-E01)	2032-3600	$ -	3	$ -
1229	**1775**	VALVE 1/2IN BALL FPT BRASS (S06-C04)		$ -	5	$ -
1230	**1776**	VALVE 1IN BALL FPT BRASS - 68-100 (S06-C06)		$ -	34	$ -
1231	**1809**	REDUCER 2 x 3/4IN MxF BRASS - 3020B07020B07 (S06-E34)	3020B07020B07	$ -	8	$ -
1232	**1810**	REDUCER 2x1IN MPTxFPT BRASS - 3020B10 (S06-E35)	3020B10	$ -	15	$ -
1233	**1811**	ELL 90 2IN CTS/PJ X CTS/PJ - L44-77 BRASS (S06-D06)	L44-77	$ -	4	$ -
1234	**1812**	VALVE 2IN ANGLE MTR STOP FxFLG - FORD #BFA13-777W *2 PER BX* (S06-E42)	BFA13-777W	$ -	4	$ -
1235	**1830**	TEE 2IN FPT BRASS (S06-C20)		$ -	7	$ -
1236	**2055**	VALVE 3/4X1IN ANGLE BRASS - KV13-342W *10 PER BX* (S06-D30)	KV13-342W	$ -	36	$ -
1237	**2056**	ADAPTER HYD 2 1/2" X 2" BRASS (S06-B32)		$ -	0	$ -
1238	**2091**	COUPLING 2IN FPT x FPT BRASS - 4540-400 flagg (S06-C16)	4540-400	$ -	13	$ -
1239	**2459**	CROSS 2IN FPT BRASS (S06-C22)		$ -	0	$ -
1240	**2667**	CAP 1-1/4IN THREADED BRASS (S06-C29)		$ -	1	$ -
1241	**2668**	ELL 90 3/4IN STREET FxM BRASS - X103-12 (S06-C25)	X103-12	$ -	2	$ -
1242	**2669**	ELL 90 1IN STREET FPTxMPT BRAS - X103-16 (S06-C26)	X103-16	$ -	9	$ -
1243	**2755**	NUT & 1IN GASKET ASSEMBLY GRIP NUT - BRASS (S06-C34)		$ -	0	$ -
1244	**2756**	NUT & 1IN GASKET ASSEMBLY GRIP NUT GJCN4-4 - BRASS (S06-C35)	GJCN4-4	$ -	50	$ -
1245	**2762**	VALVE 2IN BALL FPT BRASS - 3420BM200 *2 PER BX* (S06-C08)	3420BM200	$ -	15	$ -
1246	**2907**	VALVE 3/4IN BALL FPT BRASS - 3407BM200 (S06-C05)	3407BM200	$ -	131	$ -
1247	**3022**	NIPPLE 3/4 X 3IN BRASS (S06-E27)		$ -	25	$ -
1248	**3112**	UNION 3/4IN FPT BRASS (S06-C30)		$ -	0	$ -
1249	**3113**	UNION 1IN FPT BRASS (S06-C31)		$ -	0	$ -
1250	**3126**	UNION 1 1/2IN FPT - BRASS (S06-C32)		$ -	0	$ -
1251	**3127**	UNION 2IN 3/PC FPT BRASS - 3020U (S06-C33)	3020U	$ -	1	$ -
1252	**3481**	VALVE 1 X 3/4IN STRAIGHT BALL 5/BX- B43-342WG (S06-D29)	B43-342WG	$ -	2	$ -
1253	**3484**	VALVE 1X1IN STRAIGHT BALL - BRASS (S06-D31)		$ -	1	$ -
1254	**3978**	VALVE 1-1/2IN BALL FPT BRASS 3415BM200 (S06-C07)	3415BM200	$ -	47	$ -
1255	**4039**	VALVE 4IN GATE BRASS FPT #300 PART #3440GM300 (S06-C10)	3440GM300	$ -	0	$ -
1256	**5325**	COUPLING 1IN DOUBLE COMP BRASS - C44-44G CTS GRIP *12 PER BX* (S06-D20)	C44-44G	$ -	152	$ -
1257	**5380**	COUPLING 2IN GRIP/JOINT BRASS - C84-77G MPTxCTS/GJ (S06-D18)	C84-77G	$ -	16	$ -
1258	**5381**	ELL 90 1IN COMP.GRIP BRASS - L44-44G FORD *8 PER BX* (S06-D21)	L44-44G	$ -	129	$ -
1259	**5383**	VALVE 3/4x1IN ANGLE U-BRANCH - UV-43-42-WG FORD *8 PER BX* (S06-F01)	UV-43-42-WG	$ -	464	$ -
1260	**5384**	CORP STOP 1IN BRASS MPTxCTS/G - F1100-4G FORD *6 PER BX* (S06-D24)	F1100-4G	$ -	386	$ -
1261	**5389**	COUPLING 1-1/2IN FPTxFPT BRASS - 30155 (S06-C15)	30155	$ -	3	$ -
1262	**5390**	VALVE ANGLE 3/4 x 1IN BRASS - KV43-342WG GRIP JNT (S06-D25)	KV43-342WG	$ -	315	$ -
1263	**5403**	VALVE 3IN GATE BRASS FPT - FIG. M300 (S06-C09)	M300	$ -	1	$ -
1264	**5406**	BALL 1-1/2IN CURB STOP FPTxFPT - BRASS FORD B11-666W *2 PER BX* (S06-D10)	B11-666W	$ -	0	$ -
1265	**5429**	NUT ASSEM 1IN/FORD GRIP JOINTS - GJN4-4 (S06-B26)	GJN4-4	$ -	0	$ -
1266	**5430**	NUT ASSEM 2IN/FORD GRIP JOINTS - GJN4-7 (S06-B25)	GJN4-7	$ -	0	$ -
1267	**5471**	COUPLING 3/4IN DBL COMP BRASS GRIP/JOINT C44-33G 14/BX (S06-D19)	C44-33G	$ -	3	$ -
1268	**5476**	COUPLING 3/4IN FPT x FPT - BRASS (S06-C13)		$ -	14	$ -
1269	**5477**	COUPLING 1IN FPT x FPT BRASS (S06-C14)		$ -	9	$ -
1270	**5479**	NIPPLE 1IN X 6IN TBE BRASS (S06-E19)		$ -	14	$ -
1271	**5588**	NIPPLE 3/4 IN X 6 IN BRASS TBE (S06-E24)		$ -	4	$ -
1272	**5589**	NIPPLE 1 IN X 4 IN BRASS TBE (S06-E20)		$ -	12	$ -
1273	**5590**	NIPPLE 3/4 IN X 4 IN BRASS TBE (S06-E25)		$ -	4	$ -
1274	**5677**	NIPPLE 2IN X 6IN BRASS TBE (S06-E16)		$ -	14	$ -
1275	**5748**	VALVE SWING CHECK 2" BRASS M31 2 PER BX (S06-C36)	M31	$ -	11	$ -
1276	**5771**	ELL 90 3/4IN COMP GRIP BRASS L44-33G (S06-D16)	L44-33G	$ -	0	$ -
1277	**5802**	VALVE 3/4IN X 3/4IN BALL CURB - FORD #B43-332W-G *5 PER BX* (S06-D11)	B43-332W-G	$ -	21	$ -
1278	**5898**	NIPPLE 3/4 x 12IN BRASS (S06-E05)		$ -	1	$ -
1279	**5899**	NIPPLE 3/4 x 18IN BRASS (S06-E07)		$ -	0	$ -
1280	**5900**	NIPPLE 3/4 x 24IN BRASS (S06-E09)		$ -	2	$ -
1281	**5901**	NIPPLE 1 x 12IN BRASS (S06-E06)		$ -	4	$ -
1282	**5902**	NIPPLE 1 x 18IN BRASS (S06-E08)		$ -	1	$ -
1283	**5903**	NIPPLE 1 x 24IN BRASS (S06-E11)		$ -	2	$ -
1284	**5904**	NIPPLE 2 x 12IN BRASS (S06-E10)		$ -	2	$ -

ADDENDUM #2 - REVISED BID REPLY SPREADSHEET
E-BID #20120009

	A	B	E	G	H	I
1285	**5905**	NIPPLE 2 x18IN BRASS (S06-E13)		$ -	2	$ -
1286	**5906**	NIPPLE 2 x 24IN BRASS (S06-E12)		$ -	0	$ -
1287	**5918**	VALVE 1 1/2 IN FPT x FPT - 2621-015 (S05-D03)	2621-015	$ -	2	$ -
1288	**5927**	COPR STOP 3/4 IN BRASS - 3/4 IN F1100-3-G *10 PER BX* (S06-D14)	F1100-3-G	$ -	0	$ -
1289	**5983**	COUPLING COMP. 1 1/2" BRASS C44-66G (S06-D08)	C44-66G	$ -	0	$ -
1290	**5984**	MALE ADPT. COMP. 1 1/2" BRASS C84-66G (S06-D07)	C84-66G	$ -	0	$ -
1291	**6015**	VALVE 1 1/2 CHECK SINGLE HS11-666 *4 PER BX* (S06-E44)	HS11-666	$ -	1	$ -
1292	**6070**	VALVE BALL METER B13-332W 3/4x1 *6 PER BX* (S06-D13)	B13-332W	$ -	10	$ -
1293	**6071**	VALVE BALL METER B13-344W 3/4x1 *5 PER BX* (S06-D12)	B13-344W	$ -	0	$ -
1294		**20. SUBTOTAL**				**$ -**
1295		**21. METERS, WATER & ALL PARTS**				
1296	**3**	BACKFLOW 3/4" PREVENTER RPZ WILKINS XL (S10-B01)	975XL	$ -	32	$ -
1297	**646**	BACKFLOW 1" PREVENTER RPZ WILKINS 975XL (S10-B02)	975XL	$ -	19	$ -
1298	**650**	BACKFLOW 2" PREVENTER RPZ WILKINS 975XL	975XL	$ -	13	$ -
1299	**5608**	BACKFLOW 1 1/2" PREVENTER RPZ WILKINS 975XL (S10-B03)	975XL	$ -	3	$ -
1300		**21. SUBTOTAL**				**$ -**
1301		**TOTAL BID REPLY**				**$ -**
1302		**SUBTOTAL SUMMARY:**				
1303	**1**	**ALL GRINDER COMPENTS/FLOMATIC ONLY**				**$ -**
1304	**2**	**BRASS ITEMS / FORD, MUELLER OR APPROVED EQUAL**				**$ -**
1305	**3**	**D/I PARTS, ALL TYPES AMERICAN OR APPROVED EQUAL**				**$ -**
1306	**4**	**DUCTILE IRON PIPE / McWANE OR APPROVED EQUAL**				**$ -**
1307	**5**	**FIRE HYDRANT & PARTS**				**$ -**
1308	**6**	**FLO-CONTROL HOT TAP SADDLES ONLY**				**$ -**
1309	**7**	**GENERAL ITEMS**				**$ -**
1310	**8**	**LIFT STATION PARTS/ US FOUNDRY OR APPROVED EQUAL**				**$ -**
1311	**9**	**METER BOXES & LIDS**				**$ -**
1312	**10**	**METERS, WATER & ALL PARTS**				**$ -**
1313	**11**	**PIPE, PVC 40, C900**				**$ -**
1314	**12**	**PLUMBING PARTS / STREAMLINE-MUELLER OR APPROVED EQUAL**				**$ -**
1315	**13**	**PVC PARTS & FITTINGS / SPEARS OR APPROVED EQUAL**				**$ -**
1316	**14**	**REPAIR CLAMPS & FERNCOS / SMITH-BLAIR, FORD OR APPROVED EQUAL**				**$ -**
1317	**15**	**SCH 80 PIPE & ALL FITTINGS / SPEARS OR APPROVED EQUAL**				**$ -**
1318	**16**	**STAINLESS STEEL**				**$ -**
1319	**17**	**TAP SADDLES, ALL TYPES / SMITH-BLAIR OR APPROVED EQUAL**				**$ -**
1320	**18**	**TOOLS, SHOVELS, RAKES / REED, 3M, RAZORBACK OR APPROVED EQUAL**				**$ -**
1321	**19**	**VALVES/GATE, STEEL/CLOW,DEZURIK, KENNEDY OR APPROVED EQUAL**				**$ -**
1322	**20**	**NO-LEAD BRASS**				**$ -**
1323	**21**	**METERS, WATER & ALL PARTS**				**$ -**
1324		**TOTAL**				**$ -**
1325	**PSL Part**					
1326	**FOR ITEMS NOT IDENTIFIED IN BID, PROVIDE DISCOUNTS FROM THE FOLLOWING MANUFACTURERS LIST PRICE:**					
1327	Item #					**Total**
1328	1088			SMITH-BLAIR:		0.00%
1329	1089			CLOW:		0.00%
1330	1090			JCM:		0.00%
1331	1091			ROMAC:		0.00%
1332	1092			MUELLER:		0.00%
1333	1093			ARI AIR RELEASE		0.00%
1334	1094			VAL-MATIC:		0.00%
1335	1095			SPEARS:		0.00%
1336	1096			FLO-CONTROL:		0.00%
1337	1097			KENNEDY:		0.00%
1338	1098			CUSTOM FAB:		0.00%
1339	1099			FORD:		0.00%
1340	1100			UNION/TYLER:		0.00%

BID ADDENDUM # 1
BID # 20120009
Addendum Date: March 19, 2012

SUPPLIERS FOR WATER AND SEWER PRODUCTS

NOTE: The bid opening date is changed to March 29, 2012 @3:00 p.m.

Please see the following changes/modifications to the subject bid:

QUESTIONS and ANSWERS

Q1. Could you tell me if Charlotte pipe and fittings will be allowed for this bid?

A1. Yes. We do not address Schedule 40 or 80 PVC in the City specs or Qualified Products List.

Q2. Will the City award by line item or by section or does the quote have to be complete?

A2. The City intends to award by section, however the City reserves the right to award by line if it is the best value.

Instructions to Bidder:

Each bidder must acknowledge receipt of any addenda on the Bid Reply Sheet in order to have his/her bid or proposal/bid to be accepted.

"A City for All Ages"

CITY OF PORT ST. LUCIE

SEALED #20120009
E-BID
SUPPLIERS FOR WATER AND SEWER PRODUCTS

Prepared By: Helen Quintana, CPPB
Office of Management & Budget
121 SW Port St. Lucie Boulevard
Port St. Lucie, FL 34984-5099
772-871-5221

INVITATION TO BID

Sealed E-Bid #20120009 for Suppliers for Water and Sewer Products will be received by the Office of Management and Budget of the City of Port St. Lucie no later than 3:00 p.m. on March 22, 2012. Specifications are attached.

All bids must be received by the date and time specified above, when they will be opened and publicly read aloud. The bid time must be and shall be scrupulously observed. Under no circumstances shall bids uploaded to Demandstar.com after the time specified be accepted or considered. It is the sole responsibility of the Bidder to ensure that his or her bid is uploaded on or before the closing date and time. The City shall in no way be responsible for delays caused by any power outages or internet failures. No exceptions will be made.

Electronic replies is the **only** method allowed for Bidders to respond to this solicitation. All submittals must be compatible with Microsoft Office 2003. E-bidding will be done through a secure locked box. Bidders can only view/submit their E-Bid and will not have access to any other Bidder's submittals. The Bidder's E-Bid may be changed at the Bidder's discretion up until the due date and time have been reached, at which time, the Bidder will no longer have access to the electronic bid submittal. The City will then open the E-Bids. Bidders who are E-Bidding for the first time are strongly encouraged to contact Demandstar at (800) 771-1712 or obtain assistance by e-mailing questions to supplierservices@invia.com.

The City of Port St. Lucie reserves the right to reject any and all bids, to waive any and all informalities or irregularities, and to accept or reject all or any part of any bid as it may deem to be in the best interest of the citizens of the City.

Each Bidder must deposit with his bid, a bid bond, or bid guaranty, in the amount of forty thousand dollars ($40,000.00), made payable to the City of Port St. Lucie. A copy must be uploaded at time of submittal and then mailed immediately after opening, thus showing evidence that a bid bond was obtained. Bidders will send the **ORIGINAL** Bid Bond to the City immediately after the opening date. The original Bid Bond must be received within **three (3) business days** of the opening for the bid to be considered.

Documents required for this E-Bid include the following:

1. E-Bid Specifications, pages 1 - 54
2. E-Bid Reply Sheet #20120009, pages 16 – 18 (included in E-Bid)
3. E-Bid Reply Excel Spreadsheet – Pages 1-16 (not included in E-Bid

4. **Appendices A-C referenced in Specifications**:
   - A. Utility Standards Manual (see website: www.cityofpsl.com)
   - B. Utility Standard Details (see website: www.cityofpsl.com)
   - C. Qualified Products List (see website: www.cityofpsl.com)

ALL CAN BE FOUND ON THE WEBSITE:

HTTP:/WWW.CITYOFPSL.COM/UTILITY/COMMERCIAL-DEVELOPMENT/UTILITY-CD-DESIGN-REVIEW.HTML

Helen Quintana, CPPB
Contract Specialist

SPECIFICATIONS
BID #20120009

SUPPLIERS FOR WATER AND SEWER PRODUCTS

OVERVIEW

The City of Port St. Lucie desires to obtain quotations from qualified individuals, firms, and legal entities relative to supplying PVC Pipe & Fittings, Brass, Ductile Iron Materials and Concrete and Plastic Meter Boxes for Water and Sewer repairs on a thirty-six (36) month fixed price contract basis. The contract will include options to renew for two (2) additional twelve (12) month periods at a mutually agreed upon price with costs documented from the manufacturer. The City will try to place orders in truckload quantity. However, this cannot be guaranteed. Therefore, the Selected Bidder must agree to deliver less than truckload quantities, (when required by the City) at the contract price and with no additional shipping charges. The City reserves the right to award to one (1) or multiple Bidders.

1. GENERAL REQUIREMENTS

1.1 Invitation to Bid - All requirements contained in the Invitation to Bid are hereby incorporated in this specification.

1.2 Cost of Preparation of Bid - The City will not be responsible for any cost incurred by any Bidder in the preparation of his/her bid.

1.3 Examination of Drawings and Contract Documents - Bidders shall thoroughly examine these specifications and all other drawings, documents or other materials referred to herein and conduct such investigations and visits as may be necessary to thoroughly inform themselves regarding existing plant, facility, personnel and other conditions relative to compliance with this specification. No plea of ignorance by the Bidder of conditions that exist or may hereafter exist, as a result of failure or omission on the part of the Bidder to make said investigations and visits, and/or failure to fulfill in every detail the requirements of this specification and documents promulgated therein, will be accepted as a basis for varying the requirements of the City or the compensation of the Bidder(s).

1.4 Bid Price - Bidders must agree to furnish all item(s) that are awarded to them as a result of their response to this specification at the price(s) indicated on their respective E-Bid Reply Excel Spread Sheet . Bidders shall guarantee that said price(s) are firm, not subject to escalation, for the ninety (90) days after bid opening period. Submittal of a bid is prima facie evidence of the Bidder's intent to comply with this requirement. Any bid submitted with escalation clauses shall be rejected.

1.5 Qualifications - Bidders shall have the necessary organization, experience, capital, and equipment to carry out the provisions of the Contract to the satisfaction of the City. References from existing accounts, financial statements, list of projects recently completed and in process, major equipment available for this project, and experience of the principal members of the Bidder's organization must be furnished within seven (7) days, *if requested.*

1.6 Award of Contract – The City shall take measures as deemed necessary to determine the ability of the Bidder to perform the obligations of the Contract. The City may reject any bid where an investigation of the available information indicates a Bidder is not the most qualified to perform the obligation of the Contract. The City may require a Bidder to furnish additional statements of qualifications. Some or all of the following criteria may be used to select the bid(s) that will provide the best value to the City. The Bidder/Contractor should:

- Have sufficient financial resources to complete the order.
- Have the ability to meet quoted delivery considering all other business commitments.
- Has a satisfactory record of performance.
- Has adequate staffing to fulfill requirements.
- Has the necessary production, technical equipment and facilities (or ability to readily obtain them).
- Has necessary organization experience, operational controls, and technical skills (or ability to readily obtain them).
- Be a manufacturer, supplier, authorized distributor or vendor for the requirement.
- Be qualified and eligible to receive an award under applicable laws and regulations.
- Has bid within a competitive price range in relation to the needed goods, services or construction.
- Have skill and experience demonstrated by the bidder in performing contracts of a similar nature.
- The Bidder's past performance with City.
- Has met all requirements of the solicitation (delivery, quality and price).
- Has met bounds of commonality. (Absolute conformity is not required, just substantial or material compliance.)
- Has met bid security requirements. (Lack of security, where required, is a material nonconformity.)
- Offer a competitive Price: The element of price is but one of the criteria elements. When considering a proposal:
  Evaluate the pricing offered by the Bidder; consider lifecycle costing, and depreciation.
- Determine what proposal provides the best value to the City.

The "award date" is the date that City Council executed the motion to award the bid(s) regardless of the date Bidder received the notification of award. Notification of the award may be given by e-mail, facsimile, U.S. mail system, courier, or on the City's web site. The City reserves the right to award to one (1) or multiple Bidders.

***1.7 Variances to Specifications - Bidders must indicate any variances to the Specifications. Additionally, if bids are based on alternate products, Bidder must indicate the manufacturer's name and number of the alternate item(s) being offered and attach appropriate specifications. If variations and/or alternates are not stated in Bidder's reply, it shall be construed that the bid fully conforms to the specifications.**

1.8 OSHA Compliance - Bidders must agree that the products furnished and application methods will comply with applicable provisions of the Williams-Steiger Occupational Safety and Health Act of 1970. These requirements shall include all primary and refresher training mandated under the OSHA guidelines.

1.9 Submittal of E-Bid - Unless otherwise provided herein, all bids shall be submitted by completing and returning the E-Bid Reply Sheet and any other documentation that is required by this bid. The Bid Reply Sheet #20120009 should be typed or printed and signed in black ink. The individual signing the bid must initial all changes. All submittals are required to be electronic. No hard copies will be accepted. Here are required steps:

1) Request Bid Specifications, #20120009 from Demand Star, via phone 800-711-1712 or via internet www.cityofpsl.com.

2) Print and complete company information on E-Bid Reply Sheet #20120009, pgs. 16-18.

3) If applicable, acknowledge all Addenda on the E-Bid Reply Sheet #20120009, pgs. 16-18.

4) Electronically sign the E-Bid Reply Sheet #20120009 where indicated.

5) Upload and submit the following items onto Demandstar by the due date and time:

   a. the E-Bid Reply Sheet #20120009, pgs 16-18;

   b. current Insurance Certificate(s);

   c. Drug Free Workplace Form;

   d. a copy of your current license for this type of work; or in compliance with Florida Statute Chapter 489, a copy of the certificate issued by the State of Florida authorizing the Bidder(s) to transact business within the state;

   e. a copy of the $40,000.00 bid bond;

   f. Checklist.

****Only electronic replies are required. No hard copies will be accepted.**

1.9.1 Right to Reject -The City reserves the right to waive irregularities, reject and/or accept any and all bids, in whole or in part, to solicit and re-advertise for new bids, abandon the project in its entirety, or take other such action as serves the best interests of the City.

1.9.2 Timeliness of Submittal - All bids must be uploaded by the date and time specified above, when they will be opened and publicly read aloud. The bid time must be and shall be scrupulously observed. Under no circumstances shall bids delivered after the time specified be considered. It is the sole responsibility of the Bidder to ensure that his or her bid is uploaded to Demandstar.com on or before the closing date and time. The City shall in no way be responsible for any power outages or internet failures.

1.9.3 Bid Opening Extension – The City reserves the right to extend the bid opening date when no responses or only one (1) response is received. The City will return the received response unopened.

1.9.4 Checklist - Bidders are requested to return the attached Checklist that is contained in the bid package with the Bid Reply Sheet.

1.10 Shipping Terms - Bidders shall quote F.O.B. Destination.

1.11 Payment Terms - Invoices shall be submitted once a month, by the10th of the month and payments shall be made within thirty (30) days from receipt of an acceptable invoice, unless Contractor has chosen to use the Purchasing Card. Cash discounts for using the Purchasing Card will be considered when evaluating bids.

PLEASE NOTE

The City has implemented a **Purchasing Card Program.** The Bidder can take advantage of this program and in consideration receive payment within several days instead of the City's policy of Net 30 Days After Receipt of Invoice (ARI). Any percentage off the bid price for the acceptance of Visa will be considered in the bid award. If no such percentage is given, the City shall assume 0% discount applies.

Bidders are requested to state on the Bid Reply Sheet if they will honor the VISA Purchasing Card. In the event of failure on the part of the Bidder to make this statement the City shall assume the purchase or Contract price shall be governed by the Net 30 ARI.

1.12 Execution of Contract or Purchase Order - The Bidder will be required to execute a Standard City Contract within ten (10) days after notification by the City that Contract is available and thereafter comply with the terms and conditions contained therein. No Contract shall be considered binding upon the City until all parties have properly executed it and a purchase order and Visa order form, if applicable, has been issued.

The Bidder will be required to accept the terms and conditions of the City's Contract as provided in this proposal. Read the insurance requirements carefully. If Bidder cannot accept these terms and conditions do not submit a bid.

1.13 Failure to Execute Contract – Failure on the part of the Bidder to execute the Contract as required may be justification for the annulment of the award.

1.14 Subcontracting or Assigning of the Contract – The Bidder shall not subcontract, sell, transfer, assign or otherwise dispose of the Contract or any portion thereof, or of the work provided for therein, or of his right, title or interest therein, to any person, firm or corporation without the written consent of the City. Each Bidder shall list all subcontractors and the work provided by the suppliers in the area provided on the Bid Reply Sheet#20120009.

1.15 Time of Award - The City reserves the right to hold bid guarantees for a period not to exceed ninety (90) days after the date of the bid opening stated in the Invitation to Bid before making award.

1.16 Public Entity Statement - Section 287.133 of the Florida Statutes places the following restrictions on the ability of persons convicted of public entity crimes to transact business with the City:

A person or affiliate who has been placed on the convicted vendor list following a conviction for a public entity may not submit a bid, proposal, or reply on a contract to provide any goods or services to a public entity; may not submit a bid, proposal, or reply on a contract with a public entity for the construction or repair of a public building or public work; may not submit bids, proposals, or replies on leases of real property to a public entity; may not be awarded or perform work as a contractor, supplier, subcontractor, or consultant under a contract with any public entity; and may not transact business with any public entity in excess of the threshold amount provided in s. 287.017 for CATEGORY TWO for a period of thirty six (36) months following the date of being placed on the convicted vendor list.

1.16.1 Discrimination – An entity or affiliate who has been placed on the discriminatory vendor list may not submit a bid on a contract to provide goods or services to a public entity, may not submit a bid on a contract with a public entity for the construction or repair of a public building or public work, may not submit bids on leases of real property to a public entity, may not award or perform work as a contractor, supplier, subcontractor, or consultant under contract with any public entity, and may not transact business with any public entity.

1.17 City's Public Relations Image – The Bidder's personnel shall at all times handle complaints and any public contact with due regard to the City's relationship with the public. Any personnel in the employ of the Bidder involved in the execution of work that is deemed to be conducting him/her self in an unacceptable manner shall be removed from the project at the request of the City Manager, or his/her designee.

Patent Fees, Royalties, and Licenses – If the Bidder requires or desires to use any design, trademark, device, material or process covered by letters of patent or copyright, the Bidder and his surety shall indemnify and hold harmless the City from any and all claims for infringement in connection with the work agreed to be performed. The Bidder shall indemnify the City from any cost, expense, royalty or damage which the City may be obligated to pay by reason of any infringement at any time during the prosecution of or after completion of the work.

1.18 Tie Bid Statement - Identical tie bids, in accordance with Section 287.087, Florida Statutes, preference shall be given to businesses with drug-free workplace programs. Whenever two or more bids that are equal with respect to price, quality, and service are received by the City for the procurement of commodities or contractual services, a bid received from a business that certifies that it has implemented a drug-free workplace program shall be given preference in the award process. Please submit the form that is enclosed with your bid response.

1.19 Cooperative Purchasing Agreement - This bid may be expanded to include other governmental agencies provided a cooperative Purchasing Agreement exists or an Inter-local Agreement for joint purchasing exists between the City of Port St. Lucie and other public agencies. Bidders may agree to allow other public agencies to contract with them for the same items at the same terms and conditions as this bid, during the period of time that this bid is in effect. Each political entity will be responsible for execution of its own requirements with the Bidder.

1.20 Material Safety Data Sheets – The selected Bidder shall provide Material Safety Data Sheets (MSDS) and description literature for each chemical/compound/mixture used in the performance of the Contract to the City before the commencement of any work. All MSDS's shall be of the latest version and comply with 29 C.F.R. 1910.1200. Hazardous products shall not be used except with prior approval of the City, and must be disposed of properly by the bidder in accordance with U.S. Environmental Protection Agency 40-C.F.R. 260-265. The Bidder shall maintain and have readily accessible on-site a complete MSDS book of all chemicals, compounds/mixtures used in the execution of the contract.

1.21 Personal Protective Equipment (PPE) - All personnel are required to wear PPE in the process of the work including eye protection, hearing protection, respiratory protection as necessary, gloves, approved safety boots with steel or composite toes and any other PPE as necessary for the work.

1.22.1Contractor to follow all OSHA Confined Space and Fall Protection protocols.

1.22 Permits – The Bidder shall be responsible for obtaining all permits, licenses, certifications, etc., required by federal, state, county, and municipal laws, regulations codes, and ordinances for the performance of the work required in these specifications and to conform to the requirements of said legislation.

1.22.1 The selected Bidder shall be required to complete a **W-9 Taxpayer Identification Form** provided with the City's contract and return it with the contract and insurance documents.

1.23 Familiarity with Laws – The Bidder is assumed to be familiar with all federal, state and local laws, ordinances, rules and regulations that may affect the work. Ignorance on the part of the Bidder will in no way relieve him from responsibility. Bidder will submit all proposals in compliance with the 28 C.F.R. § 35.151.

1.24 Damage to Property – The Bidder shall preserve from damage all property along the line of work, or which is in the vicinity of or is in any way affected by the work, the removal, or destruction of which is not called for by the plans. This applies to public and private property, public and private utilities, trees, shrubs, crops, signs, monuments, fences, guardrail, pipe and underground structures, public highways, etc. Whenever such property is damaged due to the activities of the Bidder, it shall be immediately restored to a condition equal to or better than existing before such damage or injury was done by the Bidder, and at the Bidders expense. The Bidder's special attention is directed to protection of any geodetic monument, horizontal, vertical or property corner, located within the limits of construction.

National Geodetic Vertical Datum 1929 (NGVD '29) or North American Vertical Datum 1988 (NAVD '88) monuments shall be protected. If in danger of damage, notify:

Geodetic Information Center
6001 Executive Boulevard
Rockville, MD 20852
Attn: Mark, Maintenance Center
(301) 443-8319

City of Port St. Lucie vertical or horizontal datum shall also be protected. In case of damage or if relocation is needed, notify:

City of Port St. Lucie
Engineering Department
121 SW Port St. Lucie Boulevard
Port St. Lucie, FL 34984-5099
(772) 871-5175

2. SPECIAL REQUIREMENTS

2.1 Implied Warranty of Merchantability - It is understood that the implied warranty of merchantability and fitness for the specified purpose are not disclaimed not withstanding any representation to the contrary.

2.2 Warranty and Guarantee - All products furnished by the Bidder(s) shall be supplied with all warranties and guarantees of the manufacturer. All products must be warranted by the Bidder(s) to be free of defects in workmanship and material for a period of not less than ninety **(90) days**; said period to commence upon the date products are installed, or accepted by the City, whichever last occurs.

2.2.1 Repair or Replacement - Should any defect appear during this period, the Bidder(s) shall, at their expense, have repaired or replaced such item upon receipt of written notice from the City of said defect. Said repair or replacement must be accomplished within ten (10) days after receipt of notification from the City of the defect.

2.3 Samples - Samples of items, when required, must be furnished free of expense and, if not destroyed, will upon request, be returned at the Bidder's expense. Request for the return of samples must be made within thirty (30) days following opening of bids. Each individual sample must be labeled with Bidder's name, bid number, and item number. Failure of Bidder to either deliver required samples or to clearly identify samples as indicated may be reason for rejection of the bid. Unless otherwise indicated, samples should be delivered to the Office of Management and Budget.

2.4 Delivery - – Requests for materials will be made to the vendor on an as-needed basis depending on the assignment of projects and/or stocking requirements. If the order is placed before 9:00 am, same day delivery is required, if placed after 9:00 a.m., delivery is to be the following business day. Backorders are to be filled within two (2) working days. Delivery shall be within the normal working hours of the user, Monday through Friday. Items that are not delivered within the time specified may, at the City's option, be procured from an alternate source and any additional cost thus incurred invoiced to the Selected Bidder. Delivery time for materials will be a factor in award of this bid.

2.4.1 Backorders are to be filled within two – (2) business days. If upon receipt of any order, the Selected Bidder is unable to make delivery of any item(s), within the specified time, the Bidder must immediately contact the Contract Supervisor, to advise him of the anticipated delivery date. The Bidder will thereafter proceed as authorized by the Contract Supervisor. Any modification made by the Contract Supervisor to delivery dates or quantities will be confirmed in writing that the Bidder is unable to make delivery of any item(s) on the date specified shall not constitute an excusable delay.

2.5 Floor Stock - Selected Bidder must be an ongoing manufacturer or distributor of the items listed on the bid Reply Sheet and must normally carry a "floor stock" of the specified items.

2.6 Critical Need - In the event of a critical need the City reserves the right to purchase any item covered by a Contract resulting from this Specification locally.

2.7 Warehouse Site – Vendor must have a warehouse in the tri-county area (St. Lucie, Martin, or Indian River) for material pick-up.

2.8 Standard Production Items - All products offered must be standard production items that have been available to the trade for a period of not less than two (2) years and are expected to remain available in future years.

2.9 Product Inspection – All products are subject to inspection and testing prior to usage. A sample must be made available upon request.

2.10 On-Line Order Entry System – Vendor is required to have On-Line order capabilities, preferably Oracle e-business suite. If you are not using Oracle e-business suite, the following requirements must be met:

2.10.1 Selected Bidder shall have the City's of Port St. Lucie's part number ID transfer and on-line purchasing capabilities. The Selected Bidder will supply an on-line entry system to perform, at a minimum, the following functions from the Utility's location:

a) Order Entry allows the Utility to type in orders from an in-house computer. Information is sent electronically to the vendor's computer for processing.

b) Stock Availability allows the Utility to check the vendor's stock level and any branches stock level.

c) Pricing will allow the customer to verify inventory prices.

d) Accounts Receivable will allow the customer to see each invoice with all pertinent information.

e) Current Order Status and History allows the Utility to check order status, lead time, method shipped, etc. for all orders. It also gives the Utility a history of all material purchased.

f) Back Order Information gives the customer status of all back orders by order number or inventory number.

g) Electronic Messaging allows the Utility to communicate via electronic message with the vendor.

h) Order History by Order Number gives the Utility the ability to instantly look up closed orders for any information desired.

All information must be retrievable using the City of Port St. Lucie Utility's inventory numbers.

2.11 Equipment - Each party will provide and maintain at its own expense all hardware and software necessary, to effectively and reliably, execute the requirements of the scope described above.

2.12 Accountability - Access to electronic ordering must be controlled by a password system. The Utility must be assured that all files are electronically protected.

2.13 Deductions - In the event the City deems it expedient to perform work which has not been done by the Bidder as required by these Specifications, or to correct work which has been improperly and/or inadequately performed by the Bidder as required in these Specifications, all expenses thus incurred by the City, at the City's option, will be invoiced to the Bidder and/or deducted from payments due to the Bidder. Deductions thus made will not excuse the Bidder from other penalties and conditions contained in the Contract.

Balance of page left blank

3. SPECIFIC REQUIREMENTS

3.1 Interpretation of the Approximate Quantities - The Bidder's attention is called to the fact that any estimate of quantities of work to be done and materials to be furnished under the specifications as shown on the proposed form, or elsewhere, is approximate only and not guaranteed. The City does not assume any responsibility that the final quantities shall remain in strict accordance with the estimated quantities, nor shall the Selected Bidder plead misunderstanding or deception because of such estimate of quantities or of the character, location of the work, or other conditions pertaining thereto.

3.2 Delivery and Packing Requirements –

- **Deliveries** - Resulting deliveries are to be made FOB Destination - City of Port St. Lucie Utility Warehouse, 1001 SE Prineville Street, Port St. Lucie FL 34983. All items are to be designated for inside delivery. Deliveries are received at this location between the hours of 8:00 am and 3:00 pm.

- **Packing** - All materials delivered as a result of this order is to be packed in a manner which will insure that the materials are not damaged in transit. Articles shall not be combined to create an individual container weight in excess of fifty (50) pounds. A packing list specifying the City's contract number, quantity, description of each item shipped, and if the order is charged to Visa, the cardholder's name and card number shall accompany each shipment. The Selected Bidder must have the capabilities of shrink-wrapping and palletizing individual loads as well as bulk truckloads.

3.3 Loading – Material is to be loaded suitable for removal from side of vehicle.

3.4 Stock Material – Vendor is required to stock material in sizes one-half – (½") through sixteen – (16").

3.5 Product Specification Requirements: All materials must be listed in the City of Port St. Lucie's Qualified Products List. **Please refer to Appendix "C" at www.cityofpsl.com);**

3.5.1 It is required that all **Corrugated Polyethylene Pipe and Fittings** will meet or exceed industry standards and the following:

PVC Pipe – SCD 40 – ASTM 1785
PVC Pipe – SCD 80 – ASTM 1785
Polyethylene Pipe - ASTM D2737

3.5.2 Material Specifications for Concrete Meter Boxes and Plastic Meter Boxes - The following paragraphs contain the descriptions and a parts listing of Brooks Products. **All boxes quoted must meet the actual specifications and measurements on the drawings (see Appendix "B" at www.cityofpsl.com);** Brooks Products Carson- Brooks Plastics, Inc., or any acceptable equivalent.

- **Concrete meter boxes with cast iron meter reader lid:**

All aggregates, fine and course, shall conform to ASTM C-33 and be free of all deleterious substances. Cement shall be Portland in type, which conforms to ASTM C-150, Type II and

shall have a minimum strength of 5,000 psi. All concrete meter boxes shall have steel reinforcing in the box as well as the lid. The box shall have a lid with a cost-iron meter- reader lid that is permanently affixed.

- **Plastic Meter boxes:**

Rib reinforced standard single and double sizes with cast iron meter reader lids permanently affixed.

3.5.3 Fiberglass reinforced polyester (FRP) wet well liners –see Appendix B at www.cityofpsl.com - shall be manufactured from commercial grade polyester resin or other suitable polyester or vinyl ester resins, with fiberglass reinforcements. It is intended that the wet well liner be a one-piece unit and factory manufactured under quality control conditions with proof of compliance with manufacturing procedures and materials utilized. The FRP wet well liner shall be as manufactured by L.F. Manufacturing, Inc., or an approved equal.

3.5.4 Brass Parts and Materials: All brass parts and materials are required to meet or exceed American Water Works Association (AWWA) standards.

Requests for materials will be made to the vendor on an as-needed basis depending on the assignment of projects and/or stocking requirements. Contractor must deliver said materials within the same day or next business day – depending on time of day of order placement - after receipt of order (ARO). Delivery times for materials will be a factor in award of this bid. Items on which delivery cannot be made in the stated period must be identified on the Bid Reply Sheet. This time is to represent from the point your company receives the order to the time that the items arrive at the City's warehouse.

4. BID BOND REQUIREMENTS

4.1 Proposal Guaranty - A Bid Bond, certified check, cashier's check, bank money order, bank draft on any national or state bank, or cash, in a sum of $40,000.00, made payable to the "City of Port St. Lucie", shall accompany each proposal as a guarantee that the Bidder will execute the required Contract and promptly deliver the required Insurance Certificates, and other documentation required by these Specifications. Bid Bonds must be executed by a fully authorized Surety licensed by the State of Florida. The failure on the part of the Bidder to comply with this requirement will be cause for the rejection of the bid.

4.2 Return of Proposal Guaranty - After the bids have been reviewed, the Purchasing Agent may, at his/her discretion, return the guaranty deposit accompanying such proposals as in his/her judgment would not likely be considered in making the award. All other proposal guaranties will be held until the Contract has been executed, after which the proposal guaranty will be returned to the respective Bidder's whose proposals they accompanied.

4.3 Execution of Contract - After the recipient of an award has been determined and necessary approvals obtained, the City will prepare a formal Contract to be executed by the parties. The Contract will be in substance the same as the Contract given to the Bidder with these Specifications. The Bidder shall execute the Contract, deliver the required Insurance Certificates and policies, and other documentation requested. The City will execute the Contract, however, it is agreed and understood that

the City will not be bound by the Contract unless and until it has been duly authorized by the City Council and has been executed by the City Manager and a purchase order or Visa order form has been issued.

4.4 Failure to Execute - The failure on the part of the Bidder to execute the Contract and/or punctually deliver the required Insurance Certificates and other documentation may be cause for the annulment of the award. In the event of the annulment of the award, the amount of guaranty deposited with the proposal will be retained or be paid upon demand to the City, not as a forfeiture, but rather as liquidated damages for the breach of the Contract, it being agreed to by each Bidder in advance that the City will sustain certain damages by reason of the failure of the Bidder to sign the Contract and/or deliver the required Insurance Certificates and other documentation and that such damages equal the amount of the bid security, or exceed the same, and in no event shall the Bidder thereafter be permitted to contest to the contrary and does waive such right upon submitting a bid.

5. INSURANCE REQUIREMENTS – Bidders are required to submit a copy of their current insurance certificates with the Bid Reply Sheet. The Bidder shall maintain insurance coverage reflecting the minimum amounts and conditions required by the City. Insurance requirements are defined in the Contract Form.

6. ADDITIONAL INFORMATION

6.1 Brand Names - The use of any manufacturer's name, trade name, brand name, or catalog number in this specification, with the exception of Charlotte Pipe, is for the sole purpose of describing and establishing the minimum requirements for levels of quality, standards of performance and design required, and is in no way intended to prohibit the bidding of any other manufacturer's items of equal quality. The Purchasing Manager or her designee shall be the sole judge of the equality of alternate products proposed and his/her decision shall be final.

6.2 Collusion - The City reserves the right to disqualify bids, upon evidence of collusion with intent to defraud or other illegal practices upon the part of the Bidder. More than one (1) bid from an individual, partnership, corporation, association, firm, or other legal entity under the same or different names will not be considered. Reasonable grounds for believing that a Bidder is interested in more than one (1) proposal for the same work will be cause for rejection of all proposals in which such Bidders are believed to be interested. Any or all proposals will be rejected if there is any reason to believe that collusion exists among the Bidders.

6.3 Withdrawal of Bids - A Bidder may withdraw his bid without prejudice no later than the day and hour set in the "Invitation to Bid" by communicating his purpose in writing to the City at the address given in the "Invitation for Bid". When received, it will be returned to him unopened.

6.4 Bid Information - For information concerning procedures for responding to this bid, contact Helen Quintana, CPPB, Contract Specialist, at (772) 871-5221 (Telephone); (772) 871-7337 (Fax); hquintana@cityofpsl.com, (e-mail). Such contact is to be for clarification purposes only. To ensure fair consideration for all Bidders, it must be clearly understood that Mrs. Quintana is the only individual who is authorized to represent the City. Questions submitted to any other person in any other department will not be addressed. Additionally, the City prohibits communications initiated by a Bidder to **any** City Official or employee evaluating or considering the bids **(up to and including the Mayor and City Council)**, prior to the time an award decision has been made.

It is the responsibility of the Bidder to receive any and all bid information and documents. Material changes, if any, to the scope of services, or bidding procedures will be transmitted only by addendum by DemandStar.com. The Bidder, in turn, shall acknowledge receipt of the addendum by marking the Bid Reply Sheet with the Addendum number and the date of issuance. The City will not be responsible for any interpretation, other than those transmitted by Addendum to the bid, made or given prior to the bid award. The Bidder is responsible for verifying it has received all Bid Addenda.

If you have obtained this document from a source other than directly from the City or from Demandstar by Onvia.com you are not on record as a plan holder. The Office of Management & Budget takes no responsibility to provide Addenda to parties not listed by the City as plan holders. It is the Bidder's responsibility to check with our office prior to submitting your proposal to ensure you have a complete, up-to-date package. The Bidder is responsible for verifying they have received all Bid Addenda.

Balance of page left blank

Bid Reply Sheet
Bid # 2012009
Suppliers for Water and Sewer Products

1. **COMPANY NAME**: _____

DIVISION OF: _____

PHYSICAL ADDRESS: _____

MAILING ADDRESS: _____

CITY, STATE, ZIP CODE: _____

TELEPHONE NUMBER: ( ) _____ FAX NO. ( ) _____

CONTACT PERSON: _____ E-MAIL: _____

2. **ORGANIZATIONAL PROFILE**: (complete all appropriate information)

Is the firm incorporated? Yes--No If yes, in what state? _____

_____
President

_____
Vice President

_____
Treasurer

How long in present business: _____ How long at present location: _____

Is firm a minority business: Yes--No; Does firm have a drug-free workplace program: Yes--No
If no, is your company planning to implement such a program? _____

Within the previous 5 fiscal years has your organization been involved in litigation, major disputes, contract defaults, or liens? If so, please list the name of the project and explain nature and current status of the project.

_____
_____
_____

3. **ADDENDUM ACKNOWLEDGMENT** - Bidder acknowledges that the following addenda have been received and are included in its proposal/bid:

Addendum Number	Date Issued

4. VENDOR'S LIST – If your company offers commodities other than the one specified for this bid, and you wish to be put on the vendor's list, please contact Onvia.com at (800) 711-1712. Bid Tabulation Reports are advertised on the City's Web Site at www.Cityofpsl.com.

5. BID RESPONSE:

5.1 Bidder will / will not accept the Purchasing Card (Visa).
(please circle one)

5.2 Percentage of discount when payment is made with Visa: _____ %

5.3 In accordance with Section 2.4 of the specifications, if unable to supply pipe within the required one (1) day time frame, please indicate proposed delivery time from receipt of order. _____Days

5.4 Indicate "Floor Stock" quantities kept in inventory as referenced in Section 2.5:

_____

_____

_____

_____

5.5 Please state the electronic order entry system offered:

5.6 List location of warehouse site for material pick-up.

5.7 If brands specified are not being bid, please list all "or equal" brands:

_____

_____

_____

_____

_____

E-Bid Reply Sheet Totals $_____

Bidders are cautioned that the anticipated quantities used for this computation will be estimates. The City makes no guarantee as to the actual quantity that will be utilized during the Contract period. A unit price for each item offered shall be shown, and such price shall include packing and shipping unless otherwise specified.

6. INSURANCE CERTIFICATES LICENSE - Bidders are required, in accordance with Section 5, to submit a copy of their Insurance Certificate for the type and dollar amount of insurance they currently maintain. Bidders are required to submit all licenses and certifications required to perform this project.

7. COMPLETION OF FORM - An authorized representative of the firm offering this Bid must complete this form in its entirety. Prices entered herein shall not be subject to withdrawal or escalation by Bidder. The City reserves the right to hold proposals and bid guarantees for a period not to exceed 90 days after the date of the bid opening stated in the Invitation to Bid before awarding the Contract. Contract award constitutes the date that City Council executes the motion to award the bid.

8. CONTRACT - Bidder agrees to comply with all requirements stated in the specifications for this bid.

9. CERTIFICATION

This bid is submitted by: Name (print) _____ who is an officer of the above firm duly authorized to sign bids and enter into Contracts. I certify that this bid is made without prior understanding, Contract, or connection with any corporation, firm, or person submitting a bid for the same materials, supplies, or equipment, and is in all respects fair and without collusion or fraud. I understand collusive bidding is a violation of State and Federal law and can result in fines, prison sentences, and civil damage awards. I agree to abide by all conditions of this bid.

_____ _____

Signature Date

10. Bidder has read and accepts the terms and conditions of the City's standard Contract:

_____ _____

Signature Title

If a corporation renders this Bid, the corporate seal attested by the secretary shall be affixed below. Any agent signing this Bid shall attach to this form evidence of legal authority.

(seal)

Balance of page left blank

CITY OF PORT ST LUCIE
121 SW Port St. Lucie Boulevard
Port St. Lucie, Florida, 34984
772-871-5223

REFERENCE CHECK FORM

Bidder Instructions: Fill out top portion only.
(Please print or type)

E-Bid #20120009
Title: **SUPPLIERS FOR WATER AND SEWER PRODUCTS**

Bidder/Respondent: _____

Reference: _____ Fax #: _____
Email: _____ Telephone #: _____
Person to contact: _____

Reference Instructions: The above Bidder has given your name to the City of Port St. Lucie as a reference. Please complete the information below and fax within five (5) days to 772-871-7337.

Describe the scope of work of the contract awarded by your firm to this Contractor.

Was the project completed on time and within budget?

What was the project completion date?

How many projects has this vendor completed for you within the past 5 years?

What problems were encountered (claims)?

How many change orders were requested by this Contractor?

How would you rate the contractor on a scale of low (1) to high (10) for the following?

Professionalism _____ Final Product _____
Qualifications _____ Cooperation _____
Budget Control _____ Reliability _____

Would you contract with this Contractor again? Yes [ ] No [ ] Maybe [ ]
Comments:

Thank you.

For OMB Use Only	
Reference Checked	
Clerk Checked	

***** ***(THIS IS A SAMPLE ONLY - DO NOT EXECUTE)*** *****

CITY OF PORT SAINT LUCIE
CONTRACT FORM

This CONTRACT, executed this _____ day of _____, 200_, by and between the CITY OF PORT ST. LUCIE, a Florida municipal corporation, duly organized under the laws of the State of Florida, hereinafter called "City", party of the first part, and *name of Contractor* (Contractor), a Florida (or the state where they are) Corporation, *address,* Telephone No. ( ) ____ Fax No. ( ) _____, hereinafter called "Contractor," party of the second part.

RECITALS

In consideration of the below agreements and covenants set forth herein, the parties agree as follows:

SECTION I
DESCRIPTION OF SERVICES TO BE PROVIDED

The specific work that the Contractor has agreed to perform pursuant to the Bid Specifications made a part of this Contract **#20120009, Suppliers for Water and Sewer Products,** including all Attachments and Addenda, are hereby incorporated by this reference.

SECTION II
TIME OF PERFORMANCE

Contract period shall commence _____ ("commencement date") and terminate _____.thirty-six (36) months thereafter. This contract may be renewed at the end of the initial term, for two (2) additional one (1) year renewals.

SECTION III
COMPENSATION

The total amount to be paid by the City to the Contractor is on a fixed price basis with mutually agreed upon manufacturer's annual economic price adjustments as indicated on indicated on Schedule A .The Contractor will be paid a ten-dollar ($10.00) payment for indemnification as provided in Section V herein. Contractor shall invoice the City for the amount of the indemnification payment and said invoice shall accompany the signed Contracts. The total amount to be paid by the City to the Contractor is to be based on the amount of material required on each individual release from a blanket purchase order and VISA order, if applicable.

The Contractor shall not be paid additional compensation for any loss or damage, arising out of the nature of the work, from the action of the elements, or from any delay or unforeseen obstruction or difficulties encountered in the performance of the work, or for any expenses incurred by, or as a consequence of the suspension or discontinuance of the work.

Invoices for services shall be submitted once a week for all materials delivered. Payments shall be made within thirty (30) days unless Contractor has chosen to take advantage of the Purchasing Card Program, which

guarantees payment within several days. Payments shall be made provided the submitted invoice is accompanied by adequate supporting documentation and approved by Contract Supervisor as provided in Section XII.

All invoices and correspondence relative to this Contract must contain the Purchase Order number and Contract number.

SECTION IV
CONFORMANCE WITH BID

It is understood that the materials and/or work required herein are in accordance with the bid made by the Contractor pursuant to the Invitation to Bid and Specifications on file in the Office of Management and Budget of the City. All documents submitted by the Contractor in relation to said bid, and all documents promulgated by the City for inviting bids are, by reference, made a part hereof as if set forth herein in full.

SECTION V
INDEMNIFICATION/INSURANCE

The Contractor agrees to indemnify, defend, and hold harmless the City, its officers and employees, from liabilities, damages, losses and costs, including but not limited to, reasonable attorney's fees, to the extent caused by the negligent acts, recklessness, or intentional wrongful misconduct of the Contractor or Contractor and persons employed or utilized by the Contractor in the performance of the contract. As consideration for this indemnity provision the Contractor shall be paid the sum of ten dollars ($10.00), which will be added to the contract price, and paid prior to commencement of work.

The Contractor shall, on a primary basis and at its sole expense, agree to maintain in full force and effect at all times during the life of this Contract, insurance coverage, limits, including endorsements, as described herein. The requirements contained herein, as well as City's review or acceptance of insurance maintained by Contractor are not intended to and shall not in any manner limit or qualify the liabilities and obligations assumed by Contractor under the Contract.

The parties agree and recognize that it is not the intent of the City of Port St. Lucie that any insurance policy/coverage that may be obtained pursuant to any provision of this Contract will provide insurance coverage to any entity, corporation, business, person, or organization, other than the City of Port St. Lucie and the City shall not be obligated to provide any insurance coverage other than for the City of Port St. Lucie or extend its sovereign immunity pursuant to Section 768.28, Florida Statutes, under its self insured program. Any provision contained herein to the contrary shall be considered void and unenforceable by any party. This provision does not apply to any obligation imposed on any other party to obtain insurance coverage for this project, or any obligation to name the City of Port St. Lucie as an additional insured under any other insurance policy, or otherwise protect the interests of the City of Port St. Lucie as specified in this Contract.

The Contractor shall agree to maintain Workers' Compensation Insurance & Employers' Liability in accordance with Section 440, Florida Statutes. Employers' Liability must include limits of at least $100,000 each accident, $100,000 each disease/employee, $500,000 each disease/maximum. A Waiver of Subrogation endorsement must be provided. Coverage should apply on a primary basis. Should scope of work performed by Contractor qualify its employee for benefits under Federal Workers' Compensation Statute (example, U.S. Longshore & Harbor Workers Act or Merchant Marine Act), proof of appropriate Federal Act coverage must be provided.

Commercial General Liability insurance issued under an Occurrence form basis, including Contractual liability, to cover the hold harmless agreement set forth herein, with limits of not less than:

Each occurrence	$1,000,000
Personal/advertising injury	$1,000,000
Products/completed operations aggregate	$2,000,000
General aggregate	$2,000,000
Fire damage	$100,000 any 1 fire
Medical expense	$10,000 any 1 person

An Additional Insured endorsement **must** be attached to the certificate of insurance and (should be ISO CG2026) under the General Liability policy . Coverage is to be written on an occurrence form basis and shall apply as primary. A per project aggregate limit endorsement should be attached. Defense costs are to be in addition to the limit of liability. A waiver of subrogation is to be provided in favor of the City. Coverage shall extend to independent contractors and fellow employees. Contractual Liability is to be included. Coverage is to include a cross liability or severability of interests provision as provided under the standard ISO form separation of insurers clause.

Except as to Workers' Compensation and Employers' Liability, said policies shall clearly state that coverage required by the Contract has been endorsed to include the City of Port St. Lucie, a political subdivision of the State of Florida, its officers, agents and employees as Additional Insured under its Commercial General Liability policy and Business Auto policy. The name for the Additional Insured endorsement issued by the insurer shall read **"City of Port St. Lucie, a Florida municipal corporation, its officers, employees and agents, and Contract #20120009 for Suppliers for Water and Sewer Products shall be listed as additionally insured."** Said policies shall be specifically endorsed to provide thirty (30) days written notice to the City prior to any adverse changes, cancellation, or non-renewal of coverage thereunder. Said liability insurance must be accepted by and approved by the City as to form and types of coverage. In the event that the statutory liability of the City is amended during the term of this Contract to exceed the above limits, the Contractor shall be required, upon receipt of thirty - (30) days written notice from the City, to provide coverage at least equal to the amended statutory limit of liability of the City. Copies of the Additional Insured endorsements including Completed Operations coverage should be attached to the Certificate of Insurance.

The Contractor shall agree to maintain Business Automobile Liability at a limit of liability not less than $500,000 each accident covering any auto, owned, non-owned and hired automobiles. In the event, the Contractor does not own any automobiles; the Business Auto Liability requirement shall be amended allowing Contractor to agree to maintain only Hired & Non-Owned Auto Liability. This amended requirement may be satisfied by way of endorsement to the Commercial General Liability, or separate Business Auto Coverage form. Certificate holder must be listed as additional insured. A waiver of subrogation must be provided. Coverage should apply on a primary basis.

The Contractor shall agree by entering into this Contract to a Waiver of Subrogation for each required policy. When required by the insurer, or should a policy condition not permit an Insured to enter into a pre-loss Contract to waive subrogation without an endorsement then Contractor shall agree to notify the insurer and request the policy be endorsed with a Waiver of Transfer of Rights of Recovery Against Others, or its equivalent. This Waiver of Subrogation requirement shall not apply to any policy where a condition to the policy specifically prohibits such an endorsement, or voids coverage should Contractor enter into such a Contract on a pre-loss basis.

It shall be the responsibility of the Contractor to ensure that all subcontractors comply with the same insurance requirements referenced above and any additional insurance requirements needed to perform the scope of work as described herein.

All deductible amounts shall be paid for and be the responsibility of the Contractor for any and all claims under this Contract.

The Contractor may satisfy the minimum limits required above for either Commercial General Liability, Business Auto Liability, and Employers' Liability coverage under Umbrella or Excess Liability. The Umbrella or Excess Liability shall have an Aggregate limit not less than the highest "Each Occurrence" limit for either Commercial General Liability, Business Auto Liability, or Employers' Liability. When required by the insurer, or when Umbrella or Excess Liability is written on Non-Follow Form, the City shall be endorsed as an "Additional Insured."

The City, by and through its Risk Management Department, reserves the right, but not the obligation, to review and reject any insurer providing coverage.

SECTION VI
PERFORMANCE AND PAYMENT BONDS

(Not Applicable to this Bid)

SECTION VII
PROHIBITION AGAINST FILING OR MAINTAINING LIENS AND SUITS

Subject to the laws of the State of Florida and of the United States, neither Contractor nor any Subcontractor, supplier of materials, laborer or other person shall file or maintain any lien for labor or materials delivered in the performance of this Contract against the City. The right to maintain such lien for any or all of the above parties is hereby expressly waived.

SECTION VIII
WORK CHANGES

The City reserves the right to order work changes in the nature of additions, deletions or modifications without invalidating the Contract, and agrees to make corresponding adjustments in the Contract price and time for completion. Any and all changes must be authorized by a written change order signed by the City Manager or his designee as representing the City. Work shall be changed and the Contract price and completion time shall be modified only as set out in the written change order. Any adjustment in the Contract price resulting in a credit or a charge to the City shall be determined by mutual agreement of the parties.

SECTION IX
COMPLIANCE WITH LAWS

The Contractor shall give and otherwise comply with, all notices required by all applicable laws, ordinances and codes. Further, Contractor shall, at Contractor's sole cost and expense, secure and pay the fees and charges for all permits required for the performance of the Contract. All materials furnished and work performed pursuant to the Contract, and any other amendments or change orders thereto to comply with all local, state and federal laws and regulations. Contractor will comply with the requirements of 28 C.F.R. § 35.151.

SECTION X
CLEANING UP

Contractor shall, during the performance of this Contract, remove and properly dispose of resulting dirt and debris, and keep the work area reasonably clear. Upon completion of the work, Contractor shall remove all of Contractors' equipment and all excess materials, and put the work area in a neat, clean, sanitary and safe condition.

SECTION XI
NOTICE OF PERFORMANCE

When required materials have been delivered and required work performed, Contractor shall submit a written request for inspection to the Contract Supervisor. Such written request for inspection is the Contractor's Notice of Performance, which is further addressed in Section XIII of this Contract.

SECTION XII
DELIVERY DOCUMENTATION

Where Contract provides in whole or in part, for the sale and purchase of materials Contractor shall prepare a delivery ticket in triplicate for each shipment of material delivered to the City. The delivery ticket shall be signed by the Contract Supervisor or his/her designee receiving the material. One copy shall be given to the Contract Supervisor or his/her designee with the material. The Contractor shall retain one copy, and one copy shall accompany the Contractor's invoice.

SECTION XIII
INSPECTION AND CORRECTION OF DEFECTS

In order to determine whether the required material has been delivered or the required work performed in accordance with the terms and conditions of the Contract documents, the Contract Supervisor shall conduct the inspection as soon as practicable after receipt of the Contractor's Notice of Performance or delivery ticket. If such inspection shows that the required material has been delivered and required work performed in accordance with the terms and conditions of the Contract documents and that the material and work is entirely satisfactory, the Contract Supervisor shall approve the invoice when it is received. Thereafter the Contractor shall be entitled to payment, as described in Section III of this Contract. If, the inspection conducted by the Contract Supervisor reveals that the work performed is not satisfactory, or substandard, then the Contract Supervisor shall, as soon as practical, inform the representative or contact person of the respective parties hereto, of the specific findings of the inspection. The City shall provide the Contractor with the opportunity to correct, remedy or fix within a reasonable time frame but no longer than ten (10) days from the date of being informed of the unfavorable inspection the items deemed unsatisfactory or substandard, at no additional charge to the City. Such examination, inspection, or tests made by the Contract Supervisor, shall not relieve Contractor of the responsibility or obligation to remedy any deviation, deficiency, or defect in the materials used or work performed.

SECTION XIV
ADDITIONAL REQUIREMENTS

In the event of any conflict between the terms and conditions, appearing on any purchase order issued relative to this Contract, and those contained in this Contract and the Specifications herein referenced, the terms of this Contract and Specifications herein referenced shall apply. If there is a conflict between the Contract and specifications, the Contract will control.

SECTION XV
LICENSING

Contractor warrants that he possesses all licenses and certificates necessary to perform required work and is not in violation of any laws. Contractor warrants that his license and certificates are current and will be maintained throughout the duration of the Contract.

SECTION XVI
SAFETY PRECAUTIONS

Precaution shall be exercised at all times for the protection of persons, including employees, member of the public and property. The safety provisions of all applicable laws and building and construction codes shall be observed.

SECTION XVII
ASSIGNMENT

Contractor shall not delegate, assign or subcontract any part of the work required to be performed under this Contract or assign any monies due Contractor hereunder without first obtaining the written consent of the City.

SECTION XVIII
TERMINATION, DELAYS AND LIQUIDATED DAMAGES

A. Termination of Contract. If the Contractor refuses or fails to deliver material as required and/or prosecute the work with such diligence as will insure its completion within the time specified in this Contract, or as modified as provided in this Contract or as extended pursuant to section XXII of this Contract, the City by written notice to the Contractor, may terminate Contractor's rights to proceed. Upon such termination, the City may take over the work and prosecute the same to completion, by Contract or otherwise, and the Contractor and his sureties shall be liable to the City for any additional costs incurred by the City in its completion of the work. The City may also, in the event of termination, obtain undelivered materials, by Contract or otherwise, and the Contractor and his sureties shall be liable to the City for any additional cost incurred for such material. Contractor and his sureties shall also be liable to the City for liquidated damages for any delay in the completion of the work as provided below. If the Contractor's right to proceed is so terminated, the City may take possession of and utilize in completing the work such materials, tools, equipment and facilities as may be on the site of the work, and therefore necessary to accomplish the work.

B. Liquidated Damages for Delays. If material is not provided or work is not completed within the time specified in this Contract, including any extensions of time for excusable delays as herein provided, (it being impossible to determine the actual damages occasioned by the delay) the Contractor shall provide to the City one hundred dollars ($100.00) as fixed, agreed and liquidated damages for each calendar day of delay until the work is completed. The Contractor and his sureties shall be jointly and severally liable to the City for the amount thereof.

C. Excusable Delays. The right of the Contractor to proceed shall not be terminated nor shall the Contractor be charged with liquidated damages for any delays in the completion of the work or delivery of materials due to: (1) any acts of the Federal Government, including controls or restrictions or requisitioning of materials, equipment, tools or labor by reason of war, national defense or any other national emergency, (2) any adverse, willful or wrongful acts of the City, (3) causes not reasonably foreseeable by the parties at the time of the execution of the Contract that are beyond the control and without the fault or negligence of the Contractor, including but not restricted to, acts of God, acts of the public enemy, acts of another Contractor in the performance of some other Contract with the City, fires, floods, epidemics, quarantine, restrictions, strikes, freight embargos and weather of unusual severity such as hurricanes, tornadoes, cyclones and other extreme weather conditions, and (4) any delay of any Subcontractor occasioned by any of the above mentioned causes. However, the Contractor must promptly provide written notice to the City, of the delay in performing the work. Contractor shall provide such written notice of delay within two (2) days of the event that caused the delay. If on the basis of the facts and the terms of this Contract, the delay is properly excusable then the City shall extend the time for completing the work for a period of time commensurate with the period of excusable delay.

D. The City may terminate this Contract with or without cause by giving the Contractor thirty (30) days notice in writing. Upon expiration of the thirty (30) day period, the Contractor shall discontinue all services in connection with the performance of this Contract and cancel all related existing third party Contracts. Termination of the Contract by the City pursuant to this paragraph shall terminate all of the City's obligations hereunder and no charges, penalties or other costs shall be due Contractor except for work timely completed.

SECTION XIX
LAW AND VENUE

This Contract is to be construed as though made in and to be performed in the State of Florida and is to be governed by the laws of Florida in all respects without reference to the laws of any other state or nation. The venue of any action taken to enforce this Contract shall be in St. Lucie County, Florida.

SECTION XX
REIMBURSEMENT FOR INSPECTION

The Contractor agrees to reimburse the City for any expenditures incurred by the City in the process of testing materials supplied by the Contractor against the specifications under which said materials were procured, if said materials prove to be defective, improperly applied, and/or in other manners not in compliance with specifications. Expenditures as defined herein shall include, but not be limited to, the replacement value of materials destroyed in testing, the cost paid by the City to testing laboratories and other entities utilized to provide tests, and the value of labor and materials expended by the City in the process of conducting the testing. Reimbursement of charges as specified herein shall not relieve the Contractor from other remedies provided in the Contract.

SECTION XXI
APPROPRIATION APPROVAL

The Contractor acknowledges that the City of Port Saint Lucie's performance and obligation to pay under this Contract is contingent upon an annual appropriation by the City Council. The Contractor agrees that, in the event such appropriation is not forthcoming, the City may terminate this Contract and that no charges, penalties or other costs shall be assessed.

SECTION XXII
RENEWAL OPTION

In the event Contractor offers in writing, prior to the termination of this Contract, to provide the identical services required in this Contract for the identical period of time in the subsequent calendar period for a total charge that is less than ninety-six (96%) of the amount stated in this Contract and, and the City agrees that said services are required and that the cost is acceptable, then the City, without additional bidding or negotiation, may, with the mutual agreement of the Contractor, extend this Contract at the reduced price for the additional term. Contractor may exercise the option to renew by submitting a written submission three (3) months prior to the termination of the Contract period.

SECTION XXIII
ENTIRE CONTRACT

The written terms and provisions of this Contract shall take precedence over any and all prior and contemporaneous verbal or written statements of any official or other representative of the City. Any such statements shall not be effective or be construed as entering into, or forming a part of, or altering in any manner whatsoever, this Contract or Contract documents.

Balance of page left blank

IN WITNESS WHEREOF, the parties have executed this Contract at Port St. Lucie, Florida, the day and year first above written.

CITY OF PORT ST. LUCIE FLORIDA
By: _____
City Manager

ATTEST:
By: _____
City Clerk

By: _____
Authorized Representative of (company name)

State of: _____

County of: _____

Before me personally appeared: _____)
(please print)

Please check one:

Personally known _____

Produced Identification: _____
(type of identification)

Identification No.: _____

and known to me to be the person described in and who executed the foregoing instrument, and acknowledged to and before me that _____ executed said instrument for the purposes therein expressed.
(he/she)

WITNESS my hand and official seal, this _____ day of _____, 2012.

_____
Notary Signature

Notary Public: State of _____ at Large.

My Commission Expires: _____.

(*seal*)

DRUG-FREE WORKPLACE FORM

The undersigned vendor in accordance with Section 287.087, Florida Statutes hereby certifies that _____ does:
(Name of Business)

1. Publish a statement notifying employees that the unlawful manufacture, distribution, dispensing, possession, or use of a controlled substance is prohibited in the workplace and specifying the actions that will be taken against employees for violations of such prohibition.

2. Inform employees about the dangers of drug abuse in the workplace, the business's policy of maintaining a drug-free workplace, any available drug counseling, rehabilitation, and employee assistance programs, and the penalties that may be imposed upon employees for drug abuse violations.

3. Give each employee engaged in providing the commodities or Contractual services that are under bid a copy of the statement specified in subsection (1).

4. In the statement specified in subsection (1), notify the employees that, as a condition of working on the commodities or Contractual services that are under bid, the employee will abide by the terms of the statement and will notify the employer of any conviction of, or plea of guilty or nolo contendere to, any violation of Chapter 893 or of any controlled substance law of the United States or any state, for a violation occurring in the workplace no later than five (5) days after such conviction.

5. Impose a sanction on, or require the satisfactory participation in a drug abuse assistance or rehabilitation program if such is available in the employee's community, by any employee who is so convicted.

6. Make a good faith effort to continue to maintain a drug-free workplace through implementation of this section.

As the person authorized to sign the statement, I certify that this firm complies fully with the above requirements.

_____
Bidder's Signature

_____
Date

STATEMENT OF NO BID

To: City of Port St. Lucie
Office of Management & Budget
121 S.W. Port St. Lucie Boulevard
Port St. Lucie, FL 34984-5099

Bid: #_____

Bid Title: _____

We, the undersigned have declined to bid on the subject bid for the following reasons:

[ ] Insufficient time to respond to the Invitation to Bid

[ ] We do not offer this product or service.

[ ] Our schedule would not permit us to perform.

[ ] We are unable to meet specifications.

[ ] We are unable to meet bond requirements.

[ ] Specifications are unclear (Explain below).

[ ] We are unable to meet insurance requirements.

[ ] Other (Specify below).

Remarks: _____

_____

Company Name: _____ Telephone: ( ) _____

Division: _____

Address: _____

_____

Signature: _____ Date: _____

CHECKLIST
Bid #20120009
Suppliers for Water and Sewer Products

Name of Bidder: _____

This checklist is provided to assist Bidders in the preparation of their bid response. Included in this checklist are important requirements that are the responsibility of each Bidder to submit with their response in order to make their bid response fully compliant. This checklist is only a guideline -- it is the responsibility of each Bidder to read and comply with the Invitation to Bid in its entirety.

_____ Drug-Free Workplace Form uploaded to Demandstar.

_____ Copy of $40,000.00 Bid Bond (or other form of security) uploaded to Demandstar (the original **MUST** be received within 3business days after the opening).

_____ E-Bid Reply Sheet #20120009 uploaded to Demandstar.

_____ E-Bid Reply Excel Spreadsheet uploaded to Demandstar.

_____ All pricing has been mathematically reviewed and all corrections have been initialed.

_____ All price totals have been thoroughly checked.

_____ Each E-Bid Addendum (if applicable) is acknowledged.

_____ Copy of Current Insurance Certificate in accordance with Section V of the Contract Form uploaded to Demandstar.

_____ Copy of License or certificates uploaded to Demandstar.

_____ Reviewed the Contract and accept all City Terms and Conditions

THIS FORM SHOULD BE RETURNED WITH YOUR E-BID REPLY SHEET

SCHEDULE "A"
WATER/SEWER BID LIST

	ALL GRINDER COMPENTS/FLOMATIC ONLY		
3328	VALVE BALL CHECK 1-1/4IN PVC - 208T (S04-B19)	208T	109
	BRASS ITEMS / FORD, MUELLER OR APPROVED EQUAL		
10	ADAPTER HYD 2 1/2" x 2" FXM SWIVEL (S06-B33)		5
283	VALVE SWING CHECK 1 1/2" BRASS M31 5 PER BX (S06-F08)	M31	553
566	VALVE 1-1/2IN BALL MxFL - BF83-666W BRASS (S06-E39)	BF83-666W	1
567	VALVE 2IN BALL MIPxMF LW BRASS - BF83-77W FORD (S06-E41)	BF83-77W	2
568	CORP 1-1/2IN STOP MPTxCTS/PJ - BF1100-6 (S06-E40)	BF1100-6	0
569	BALL CORP 1-1/2IN MxF - FB1700-6 (S06-D05)	FB1700-6	1
570	BALL CORP 2IN MxF BRASS - FB1700-7 *2 PER BX* (S06-E38)	FB1700-7	8
578	BACKFLOW 3/4IN VAC BRKR 8B07 - WATTS EDP# 0061992 (S06-E45)	8B07 / 61992	7
592	NIPPLE 3/4xCL TBE BRASS - 2012-001 (S06-E26)	2012-001	112
593	NIPPLE 1IN X CL BRASS - 2016-001 (S06-E23)	2016-001	40
594	NIPPLE 1IN x 3IN BRASS TBE - 2016-300 (S06-E22)	2016-300	32
595	NIPPLE 1-1/2IN x CL BRASS - 2024-001 (S06-E17)	2024-001	10
596	NIPPLE 1-1/2 x 3IN BRASS - 2024-300 (S06-E18)	2024-300	8
597	NIPPLE 2IN X CL BRASS TBE - 2032-001 (S06-E21)	2032-001	26
598	NIPPLE 2INx4IN TBE BRASS - 2032-400 (S06-E14)	2032-400	9
599	VALVE 3/4IN GATE FPT BRASS - 3407GM300 (S06-F02)	3407GM300	300
600	VALVE 1IN GATE FPT BRASS - 200 WOG *5 PER BX* (S06-C01)	200 WOG	0
601	VALVE 1-1/2IN GATE FPT BRASS - #200 WOG FPT *4 PER BX* (S06-C02)	200 WOG	5
602	VALVE 2IN GATE FPT BRASS - #200 WOG FPT *2 PER BX* (S06-C03)	200 WOG	1
603	VALVE 3/4IN HOSE BIBB BRASS - 3407HBM (S06-C11)	3407HBM	430
604	VALVE 1IN HOSE BIBB BRASS - #107-265/T-531 MALE (S06-C12)	107-265/T-531	0
605	VALVE 3/4IN STR DUAL CK BRASS - HHS31-323 FORD *8 PER BX* (S06-D22)	HHS31-323	2055
606	VALVE 1IN STRAIGHT DUAL CHECK - BRASS FORD#HHS31-344 (S06-D23)	HHS31-344	20
607	CORP 1IN STOP BRASS - CTS/PJ X TAPER MPT		0
610	VALVE 3/4X5/8IN ANGLE KEY - KV13-332W BRASS *12 PER BX* (S06-D28)	KV13-332W	45
611	VALVE 3/4X3/4IN ANGLE KEY - KV43-332WG BRASS *8 PER BX* (S06-D32)	KV43-332WG	3
613	VALVE 1IN ANGLE KEY BRASS - KV13-444W *5 PER BX* (S06-D26)	KV13-444W	32
614	VALVE 1X1IN ANGLE KEY - BRASS P/N-KV43-444WG *5 PER BX* (S06-D27)	KV43-444WG	2
615	COUPLING 3/4IN COMP/SINGLE - C84-33G MPJxCTS/PJ BR 24 bx (S06-D15)	C84-33G	7
616	COUPLING 1IN COMP/SINGLE BRASS C84-44G MPTxCTS/PJ 14 PER BX (S06-D17)	C84-44G	44
618	COUPLING 3/4IN DOUBLE COMP - CTS/PJ #C44-33 BRASS	C44-33G	0
620	COUPLING 2IN COMP DBL GRIP/JNT - BRASS #C44-77G FORD (S06-D09)	C44-77G	2
623	SCREW OIL FOR OPERATING NUT STANDARD TRAFFIC 190703 (B02-28)	190703	2
626	METER COUPLING 3/4IN BRASS - PLUMBERS PIECES (S06-C17)		75
627	METER COUPLING 1 IN BRASS - PLUMBERS PIECE (S06-C18)		35
629	TEE 1IN BRASS FPT (S06-C19)		13
630	ELL 90 2IN ST FxMPT BRASS - 30209E (S06-C23)	30209E	3
631	REDUCER 1X3/4IN BRASS FXM/THD - MUELLER/METER (S06-E31)		36
633	REDUCER 1-1/2 X 1IN MPTxFPT - BRASS (S06-E30)		118
634	REDUCER 2-1/2IN x 2IN MxF - BRASS BUSHING (S06-E33)		5
635	ADAPTER HYD 2 1/2" X 2" BRASS - MNST (S06-B38)		25
636	ADAPTER HYD 2 1/2" x 3/4" BRASS - FNST X MIPT (S06-B34)		3

637	ADAPTER HYD 2 1/2" X 1" BRASS (S06-B35)		3
638	ADAPTER HYD 2 1/2" x 1 1/2" - BRASS (S06-B36)		0
639	ADAPTER HYD 2 1/2" X 2" BRASS FXM (S06-B37)		3
644	HOSE NOZZLE 2 1/2" BRASS AMLOK 84-20-3 (S06-B31)	84-20-3	1
651	RESETTER COPPER 5/8 x 3/4 x 7 - V42-7W (S06-F03)	V42-7W	114
652	RESETTER COPPER 5/8 x 3/4 x 9 - V42-9W FORD (S06-F04)	V42-9W	23
653	RESETTER COPPER 5/8 X 3/4 X 12 V42-12W (S06-F06)	V42-12W	18
654	RESETTER COPPER 1 X 10IN - FORD V44-10W (S07-E13)	V44-10W	0
655	RESETTER COPPER 1 X 12IN - FORD V44-12W (S07-E14)	V44-12W	0
1198	NIPPLE 1/4" X 2" BRASS 2271-419 (S06-C38)	2271-419	3
1307	BALL 2IN CURB STOP FXF BRASS - B11-77W FORD *2 PER BX* (S06-E43)	B11-77W	4
1377	NIPPLE 1 X 36IN BRASS TBE (S06-E03)		4
1378	NIPPLE 1 1/2 X 36IN BRASS TBE (S06-E04)		1
1379	NIPPLE 2IN X 3IN BRASS TBE - 2032-300 (S06-E15)	2032-300	27
1380	ELL 90 DEG.3/4IN FPTxFPT BRASS - 4501-150 (S06-C27)	4501-150	0
1381	ELL 90 1IN FPT X FPT - BRASS (S06-C28)		11
1382	ELL 1-1/2IN 90 FXF - BRASS (S06-C21)		0
1383	ELL 90 2IN FXF BRASS - 4501-400 (S06-C24)	4501-400	5
1572	ADAPTER METER 1 X 3/4 IN MXF - BRASS #3907A24 PER PR. (S06-E37)	3907A24	0
1573	REDUCER 2 X 1-1/2IN MxF BRASS - HEX BUSHING (S06-E32)		8
1606	REDUCER 1 X 3/4IN MPTxFPT - BRASS BUSHING (S06-E28)		69
1640	COUPLING 5/8 X 3/4IN METER - C31-23 Ford BRASS (S06-E36)	C31-23	2
1655	REDUCER 1 1/4X1IN MXF/THD - BRASS (S06-E29)		7
1656	NIPPLE 3/4 X 36IN BRASS TBE - 2012-3600 (S06-E02)	2012-3600	1
1657	NIPPLE 2 X 36IN BRASS TBE - 2032-3600 (S06-E01)	2032-3600	3
1775	VALVE 1/2IN BALL FPT BRASS (S06-C04)		5
1776	VALVE 1IN BALL FPT BRASS - 68-100 (S06-C06)		34
1809	REDUCER 2 x 3/4IN MxF BRASS - 3020B07020B07 (S06-E34)	3020B07020B07	8
1810	REDUCER 2x1IN MPTxFPT BRASS - 3020B10 (S06-E35)	3020B10	15
1811	ELL 90 2IN CTS/PJ X CTS/PJ - L44-77 BRASS (S06-D06)	L44-77	4
1812	VALVE 2IN ANGLE MTR STOP FxFLG - FORD #BFA13-777W *2 PER BX* (S06-E42)	BFA13-777W	4
1830	TEE 2IN FPT BRASS (S06-C20)		7
2054	MARKER BRASS - FOR 2" WATER VALVE (S10-D23)		0
2055	VALVE 3/4X1IN ANGLE BRASS - KV13-342W *10 PER BX* (S06-D30)	KV13-342W	36
2056	ADAPTER HYD 2 1/2" X 2" BRASS (S06-B32)		0
2091	COUPLING 2IN FPT x FPT BRASS - 4540-400 flagg (S06-C16)	4540-400	13
2459	CROSS 2IN FPT BRASS (S06-C22)		0
2667	CAP 1-1/4IN THREADED BRASS (S06-C29)		1
2668	ELL 90 3/4IN STREET FxM BRASS - X103-12 (S06-C25)	X103-12	2
2669	ELL 90 1IN STREET FPTxMPT BRAS - X103-16 (S06-C26)	X103-16	9
2755	NUT & 1IN GASKET ASSEMBLY GRIP NUT - BRASS (S06-C34)		0
2756	NUT & 1IN GASKET ASSEMBLY GRIP NUT GJCN4-4 - BRASS (S06-C35)	GJCN4-4	50
2762	VALVE 2IN BALL FPT BRASS - 3420BM200 *2 PER BX* (S06-C08)	3420BM200	15
2907	VALVE 3/4IN BALL FPT BRASS - 3407BM200 (S06-C05)	3407BM200	131
3022	NIPPLE 3/4 X 3IN BRASS (S06-E27)		25
3112	UNION 3/4IN FPT BRASS (S06-C30)		0
3113	UNION 1IN FPT BRASS (S06-C31)		0
3126	UNION 1 1/2IN FPT - BRASS (S06-C32)		0
3127	UNION 2IN 3/PC FPT BRASS - 3020U (S06-C33)	3020U	1
3481	VALVE 1 X 3/4IN STRAIGHT BALL 5/BX- B43-342WG (S06-D29)	B43-342WG	2
3484	VALVE 1X1IN STRAIGHT BALL - BRASS (S06-D31)		1

3978	VALVE 1-1/2IN BALL FPT BRASS 3415BM200 (S06-C07)	3415BM200	47
4039	VALVE 4IN GATE BRASS FPT #300 PART #3440GM300 (S06-C10)	3440GM300	0
5325	COUPLING 1IN DOUBLE COMP BRASS - C44-44G CTS GRIP *12 PER BX* (S06-D20)	C44-44G	152
5380	COUPLING 2IN GRIP/JOINT BRASS - C84-77G MPTxCTS/GJ (S06-D18)	C84-77G	16
5381	ELL 90 1IN COMP.GRIP BRASS - L44-44G FORD *8 PER BX* (S06-D21)	L44-44G	129
5383	VALVE 3/4x1IN ANGLE U-BRANCH - UV-43-42-WG FORD *8 PER BX* (S06-F01)	UV-43-42-WG	464
5384	CORP STOP 1IN BRASS MPTxCTS/G - F1100-4G FORD *6 PER BX* (S06-D24)	F1100-4G	386
5389	COUPLING 1-1/2IN FPTxFPT BRASS - 30155 (S06-C15)	30155	3
5390	VALVE ANGLE 3/4 x 1IN BRASS - KV43-342WG GRIP JNT (S06-D25)	KV43-342WG	315
5403	VALVE 3IN GATE BRASS FPT - FIG. M300 (S06-C09)	M300	1
5406	BALL 1-1/2IN CURB STOP FPTxFPT - BRASS FORD B11-666W *2 PER BX* (S06-D10)	B11-666W	0
5429	NUT ASSEM 1IN/FORD GRIP JOINTS - GJN4-4 (S06-B26)	GJN4-4	0
5430	NUT ASSEM 2IN/FORD GRIP JOINTS - GJN4-7 (S06-B25)	GJN4-7	0
5471	COUPLING 3/4IN DBL COMP BRASS GRIP/JOINT C44-33G 14/BX (S06-D19)	C44-33G	3
5476	COUPLING 3/4IN FPT x FPT - BRASS (S06-C13)		14
5477	COUPLING 1IN FPT x FPT BRASS (S06-C14)		9
5479	NIPPLE 1IN X 6IN TBE BRASS (S06-E19)		14
5588	NIPPLE 3/4 IN X 6 IN BRASS TBE (S06-E24)		4
5589	NIPPLE 1 IN X 4 IN BRASS TBE (S06-E20)		12
5590	NIPPLE 3/4 IN X 4 IN BRASS TBE (S06-E25)		4
5677	NIPPLE 2IN X 6IN BRASS TBE (S06-E16)		14
5748	VALVE SWING CHECK 2" BRASS M31 2 PER BX (S06-C36)	M31	11
5771	ELL 90 3/4IN COMP GRIP BRASS L44-33G (S06-D16)	L44-33G	0
5802	VALVE 3/4IN X 3/4IN BALL CURB - FORD #B43-332W-G *5 PER BX* (S06-D11)	B43-332W-G	21
5898	NIPPLE 3/4 x 12IN BRASS (S06-E05)		1
5899	NIPPLE 3/4 x 18IN BRASS (S06-E07)		0
5900	NIPPLE 3/4 x 24IN BRASS (S06-E09)		2
5901	NIPPLE 1 x 12IN BRASS (S06-E06)		4
5902	NIPPLE 1 x 18IN BRASS (S06-E08)		1
5903	NIPPLE 1 x 24IN BRASS (S06-E11)		2
5904	NIPPLE 2 x 12IN BRASS (S06-E10)		2
5905	NIPPLE 2 x18IN BRASS (S06-E13)		2
5906	NIPPLE 2 x 24IN BRASS (S06-E12)		0
5918	VALVE 1 1/2 IN FPT x FPT - 2621-015 (S05-D03)	2621-015	2
5927	COPR STOP 3/4 IN BRASS - 3/4 IN F1100-3-G *10 PER BX* (S06-D14)	F1100-3-G	0
5983	COUPLING COMP. 1 1/2" BRASS C44-66G (S06-D08)	C44-66G	0
5984	MALE ADPT. COMP. 1 1/2" BRASS C84-66G (S06-D07)	C84-66G	0
6015	VALVE 1 1/2 CHECK SINGLE HS11-666 *4 PER BX* (S06-E44)	HS11-666	1
6031	MARKER BRASS - FOR 2" SEWER F/M (S10-D11)		0
6070	VALVE BALL METER B13-332W 3/4x1 *6 PER BX* (S06-D13)	B13-332W	10
6071	VALVE BALL METER B13-344W 3/4x1 *5 PER BX* (S06-D12)	B13-344W	0
6072	MARKER BRASS - FOR 4" WATER VALVE (S10-D12)		2
6074	MARKER BRASS - FOR 6" WATER VALVE (S10-D13)		0
6075	MARKER BRASS - FOR 8" WATER VALVE (S10-D14)		0
6076	MARKER BRASS - FOR 10" WATER VALVE (S10-D15)		0
6077	MARKER BRASS - FOR 12" WATER VALVE (S10-D16)		0
6078	MARKER BRASS - FOR 16" WATER VALVE (S10-D17)		0
6079	MARKER BRASS - FOR 20" WATER VALVE (S10-D18)		0
6080	MARKER BRASS - FOR 24" WATER VALVE (S10-D19)		0
6081	MARKER BRASS - FOR 30" WATER VALVE (S10-D20)		0

6082	MARKER BRASS - FOR 36" WATER VALVE (S10-D21)		0
6083	MARKER BRASS - FOR 42" WATER VALVE (S10-D22)		0
	D/I PARTS, ALL TYPES AMERICAN OR APPROVED EQUAL		
628	CLEAN OUT 4IN C/I W/BRASS PLUG (S06-B08)		0
680	GASKET 12IN FIELD LOCK (S08-A01)		0
734	MEGALUG 10 IN FOR D/I PIPE (S11-D21)		0
834	RISER 1IN VALVE BOX - 59VR010I (S09-D17)	59VR010I	44
835	RISER 2IN VALVE BOX - 59VR020I (S09-D18)	59VR020I	63
836	RISER 3IN VALVE BOX - 59VR030I (S09-D19)	59VR030I	49
837	RISER 4IN VALVE BOX - 59VR040I (S09-D20)	59VR040I	36
868	GASKET RUBBER 7.25-7.65 F/STEEL COUPLING (S10-A23)		0
869	GASKET 9.40-9.74 STEEL COUPLIN - FORD PN=20377 (S10-A24)	20377	0
870	GASKET RUBBER 9.46-9.85 F/STEEL COUPLING (S10-A25)		0
871	GASKET RUBBER 6.63 F/STEEL COUPLING (S10-A26)		0
872	GASKET RUBBER 8.60-9.06 F/STEEL COUPLING (S10-A27)		0
873	GASKET RUBBER F/STEEL COUPLING - PN=33813 (S10-A28)	33813	0
874	GASKET RUBBER 11.90-12.20 - F/STEEL COUPLING (S10-A29)		0
901	KIT 3IN COMPANION FLANGE D/I (S11-B02)		0
902	KIT 4IN COMPANION FLANGE - DUCTILE IRON (S11-B04)		0
903	KIT 6IN RESTRAINER - 1300 SINGLE FLANGE (S11-A04)		0
904	RESTRAINER FOR 8" PVC BELL JOINT - 1390 1300 (S11-B07)		0
905	KIT MJ 3IN ACCESSORY (S11-B01)		0
906	KIT MJ 4IN ACCESSORY (S11-B03)		7
907	KIT MJ 6IN ACC. WITH GLAND - FLANGE/GASKET/T-BOLT (S11-B05)		1
908	KIT MJ 8IN ACCESSORY (S11-B08)		2
909	KIT MJ 10IN ACCESSORY (S11-B09)		0
910	KIT MJ 12IN ACCESSORY - PART #21AMMJR12 (S11-B10)	21AMMJR12	1
911	KIT MJ 16IN ACCESSORY (S11-B12)		0
912	GASKET 3IN MJ RUBBER (S11-C01)		1
913	GASKET 3IN RUBBER TRANSITION - PART #21AMG503 (S11-C02)	21AMG503	0
914	GASKET MJ 4IN RUBBER (S11-C03)		24
915	GASKET 4IN RUBBER TRANSITION (S11-C04)		16
916	GASKET 6IN MJ RUBBER - FOR D/I PIPE (S11-C05)		70
917	GASKET 6IN TRANSITION RUBBER - 21AMG506 (S11-C06)	21AMG506	6
918	GASKET MJ 8IN RUBBER (S11-C07)		24
919	GASKET 8IN TRANSITION RUBBER (S11-C08)		0
920	GASKET 10IN MJ RUBBER (S11-C09)		0
921	GASKET 10IN TRANSITION RUBBER (S11-C10)		0
922	GASKET MJ 12IN RUBBER (S11-C11)		23
923	GASKET 12IN TRANSITION RUBBER (S11-C12)		7
924	GASKET MJ 16IN RUBBER (S11-C14)		0
925	GASKET MJ 18IN RUBBER (S11-C15)		0
926	FLANGE 3IN COMPANION D/I (S11-D01)		4
927	FLANGE 3IN UNION (S11-D02)		2
928	MEGALUG 3IN FOR D/I PIPE - PART #21AMF8031103 (S11-D03)	21AMF8031103	0
929	MEGALUG 3IN FOR PVC PIPE (S11-D04)		0
930	FLANGE 4IN SPLIT (S11-D05)		0
931	FLANGE 4IN FEMALE THD 8 HOLE - 2404FCCS STEEL (S11-D06)	2404FCCS	1
932	FLANGE 4 IN UNION - PART #2404FU (S11-D07)	2404FU	4
933	MEGALUG 4IN FOR D/I PIPE (S11-D08)		5

934	MEGALUG 4IN FOR PVC PIPE (S11-D09)		17
935	FLANGE 6IN FEMALE THD 8 HOLE - STEEL (S11-D10)		0
936	FLANGE 6IN SPLIT (S11-D11)		0
937	MEGALUG 6IN FOR D/I PIPE (S11-D12)		4
938	MEGALUG 6IN FOR PVC PIPE - 21AMF8062006PV (S11-D13)	21AMF8062006PV	26
939	FLANGE 6IN UNION DUCTILE IRON (S11-D14)		0
940	FLANGE 8IN UNION (S11-D15)		0
941	MEGALUG 8IN FOR D/I PIPE (S11-D16)		2
942	MEGALUG 8IN FOR PVC PIPE (S11-D17)		24
943	RING 8IN SPLIT 1300 (S11-D18)	1300	0
944	FLANGE 10 IN UNION (S11-D19)		0
945	MEGALUG 10IN FOR PVC PIPE (S11-D20)		0
946	RESTRAINT 12IN SPLIT 1300C (S11-B11)	1300C	1
947	MEGALUG 12IN FOR D/I PIPE (S11-E02)		1
948	FLANGE 12 IN UNION (S11-E03)		0
949	MEGALUG 12IN FOR PVC PIPE (S11-E01)		32
950	MEGALUG 16IN FOR D/I PIPE (S11-E04)		0
951	MEGALUG 16IN FOR PVC PIPE (S11-E05)		0
952	FLANGE 16IN UNION (S11-E06)		0
953	MEGALUG 18IN FOR D/I PIPE (S11-E07)		0
954	MEGALUG 18IN FOR PVC PIPE (S11-E08)		0
955	FLANGE 18IN UNION-400C (S11-E09)	400C	0
956	FLANGE 20IN UNION-400C (S11-E10)	400C	2
957	MEGALUG 20IN FOR PVC PIPE (S11-E11)		0
996	BOLT 5/8 X 3IN T-HEAD & NUT 120 b/x (S12-E14)		4
997	BOLT 3/4 X 4IN T-HEAD & NUT - NON-ROTATING (S12-E16)		24
998	BOLT 3/4 X 4IN T-HEAD - 60 PER BOX (S12-E17)		276
999	BOLT 3/4 X 4-1/2IN T-HEAD - & NUT (S12-E18)		73
1000	BOLT 3/4 X 4-1/2IN T-HEAD &NUT - NON ROTATING (S12-E19)		0
1001	BOLT 3/4 X 5IN T-HEAD & NUT (S12-E20)		52
1002	EYEBOLT 3/4IN ANGLED *DUC-LUG* (S12-E21)		8
1194	BEND 90 3IN FLANGED DI - PART #24039F (YD-67)	24039F	0
1195	FLANGE 3IN MJ DI (YD-68)		0
1196	CAP 3IN MJ DI (YD- 70)		0
1197	BEND 45 3IN MJ DI (YD-69)		0
1199	SLEEVE 3 x 12IN MJ DI (YD-64)		0
1200	BEND 45 4IN FLANGED DI (YD-62)		0
1201	BEND 90 4IN FLANGED DI C/L C110 (YD-63)		0
1202	PLUG 4IN MJ DI (YD-60)		0
1203	CAP 4IN MJ DI (YD-61)		0
1204	FLANGE 4IN MJ DI (YD-58)		7
1205	BEND 45 4IN MJ DI (YD-59)		1
1206	BEND 90 4IN MJ DI (YD-56)		1
1207	FLANGE 4IN WELD NECK - R.F. #150 B-16-A105 (S09-A03)	150 B-16-A105	0
1208	SLEEVE 4 x 12IN MJ DI - NOT COATED (YD-53)		6
1209	CAP 6IN MJ DI (YD-50)		1
1210	PLUG 6IN MJ DI (YD-51)		0
1211	FLANGE 6IN UNI-FLANGE - TWO HOLE FOR DI (YD-52)		0
1212	FLANGE 6IN MJ DI (YD-49)		11
1213	BEND 45 6IN FLANGED DI (YD-48)		0
1214	BEND 45 6IN MJ DI (YD-47)		0

1215	BEND 90 6IN FLANGED DI - EPOXY LINED	EPOXY LINED	0
1216	BEND 90 6IN MJ X SPIGOT DI (YD-45)		0
1217	BEND 90 6IN MJ DI CEMENT LINED YD-44)	CEMENT LINED	0
1218	SLEEVE 6 X 12IN MJ DI - CEMENT LINED (YD-43)	CEMENT LINED	12
1219	TEE 6 X 6 X 6 MJ DI (YD-41)		0
1220	FLANGE 8 IN MJ DI (YD-40)		0
1221	CAP 8IN MJ DI - 2108CT (YD-39)		1
1222	BEND 45 8 IN MJ DI CEMENT LINED (YD-38)	CEMENT LINED	0
1223	SLEEVE 8 X 12 MJ DI (YD-37)		6
1224	FLANGE 10 IN MJ DI (YD-36)		0
1225	BEND 45 10 IN MJ DI (YD-35)		0
1226	SLEEVE 10 X 12 IN MJ DI (YD-34)		0
1227	FLANGE 12 IN MJ DI (YD-33)		0
1228	CAP 12 IN MJ DI (YD-32)		4
1229	BEND 45 12IN MJ DI CEMENT LINED (YD-31)	CEMENT LINED	0
1230	SLEEVE 12IN X 12IN MJ DI (YD-30)		10
1232	BEND 90 12 IN FLANGED DI (YD-28)		0
1233	FLANGE 16 IN MJ DI (YD-27)		0
1234	SLEEVE 16 X 15 IN MJ DI (YD-26)		0
1235	FLANGE 18 IN MJ DI (YD-25)		0
1236	SLEEVE 18 X 15 IN MJ DI (YD-23)		0
1237	FLANGE 20 IN MJ DI (YD-21)		0
1238	SLEEVE 20 X 15 IN MJ DI (YD-20)		0
1239	LID WATER LOCKING (YD-74)		11
1240	LID SEWER VALVE BOX LOCKING (YD-71)		2
1241	LID WATER NON LOCKING - 5-1/4IN (YD-75)		85
1242	VALVE BOX TOP DI 461S (YD-73)	461S	13
1244	VALVE BOX TOP & BOTTOM - 461-S LESS LID (YD-76)	461-S	60
1254	REDUCER 6 X 4 IN MJ DI (YD-11)		0
1255	REDUCER 8 X 6 IN MJ DI (YD-12)		0
1256	TEE 6 X 6 X 4 IN MJ DI CEMENT LINED (YD-22)	CEMENT LINED	0
1397	WYE 2-1/2IN X 2-1/2IN PUSH ON - EPOXY COATED FOR D/I (S09-A02)	EPOXY COATED	0
2498	TEE 4 X 4 X 4 IN MJ DI (YD-57)		0
2502	BEND 11-1/4 3 IN MJ CP DI (YD-66)		0
2503	BEND 11-1/4 4 IN MJ CP DI C153 (YD-55)		0
2504	BEND 22-1/2 3 IN CP DI C153 (YD-65)		0
2505	BEND 22-1/2 4IN MJ CP DI C153 (YD-54)		0
2805	BOLT 3/4 X 3-1/2IN T-HEAD & - NUT *85 PER BX* (S12-E15)		517
2814	BEND 90 12IN MJ DI - 21129M (YD-29)	21129M	0
2815	LID SEWER NON LOCKING (YD-72)		8
5021	FLANGE 8 IN BLIND D/I - 8 HOLE		0
5388	ELL 45 DEG. 4IN GALV FPTxFPT		0
5462	EXTENSION 6FT VALVE STEM - PART #65VSE060C	65VSE060C	0
5642	ELL 45 12IN MJ DI		0
5643	KIT 12IN MEGALUG ACCESSORY - FOR PVC		0
5772	SLEEVE 12 X 6IN TAPPING D/I - OD 13.20-13.50		0
5781	TEE 3 x 3 x 3IN FLANGED D/I - PART #2403T030F	2403T030F	0
5782	TEE 3 x 3 x 2IN FLANGED D/I - BRANCH IS 2IN		0
5783	FLANGE 2 IN COMPANION - WITH 2IN FIPT		0
5784	SLEEVE 3IN X 12IN FLANGED - D/I SPOOL PIECE		0
5786	TEE 3 x 3 x 3IN MJ D/I - PART #2103T030M	2103T030M	0

5787	CAP 3IN MJ TAPPED W/2IN IPT - DUCTILE IRON		0
5788	REDUCER 6x4 DI EPOXY LINED - PART #2406R04FE	2406R04FE	0
5791	CROSS 6IN D/I EPOXY LINED - FLANGED #2406X060FE	2406X060FE	0
5792	FLANGE 6x4 REDUCING COMPANION - THRD D/I #2406FC40S	2406FC40S	0
5804	TEE 8IN FLANGED DUCTILE IRON		0
5805	TEE 6IN FLANGED DUCTILE IRON		0
5808	BEND 6IN 90 DEG D/I FLANGED - NOT LINED (YD-46)		4
5822	TEE 8 x 8 x 6IN DUCTILE IRON - FLANGED CEMENT LINED		0
5828	CAP 16IN DUCTILE IRON MJ - W/2" CENTER TH TAP (YD-24)		0
5842	CROSS 4IN DI EPOXY LINE FLANGD - PART #2404X040FE	2404X040FE	0
5860	FLANGE 12 IN BELL - 073019 for C-900 (S07-E09)		0
5868	RESTRAINT FOR 6in P.V.C. - 1390-C - 2 FLANGES (S11-B06)	1390-C	0
5938	GASKET 20" MJ (S11-C16)		0
5939	GASKET 24" MJ (S11-C17)		0
5977	TEE 8 X 8 X 6 MJ DI CEMENT LINED (ORDER ON REQUEST)		0
6019	TEE 24" EPOXY MJ (YD-14)		0
6020	SLEEVE 24" EPOXY MJ (YD-18)		0
6021	SLEEVE 12" EPOXY MJ (YD-42)		0
6022	MEGALUG 24IN FOR PVC PIPE (S10-E02)		0
6023	GASKET 24" MJ (S11-C18) SEE PART # 5939		0
6105	SLEEVE 6 X 12" MJ DI EPOXY COATED (YD-04)	EPOXY COATED	0
	DUCTILE IRON PIPE / McWANE OR APPROVED EQUAL		
1185	PIPE 3IN DI C/51 CEMENT LINED (PR4-A01)	C/51 CEMENT LINED	0
1186	PIPE 4IN DI C/51 CEMENT LINED (PR4-A02)	C/51 CEMENT LINED	5
1187	PIPE 6IN D/I CEMENT LINED - CLASS 51 (PR4-C01)	C/51 CEMENT LINED	0
1188	PIPE 8IN DI C/51 CEMENT LINED (PR3-A01)	C/51 CEMENT LINED	0
2099	PIPE 10IN CLASS 51 EPOXY LINED - DI (PR3-C02)	C/51 EPOXY LINED	0
2100	PIPE 10IN CLASS 51 CEMENT LINE - DI (PR3-C01)	C/51 CEMENT LINED	0
2101	PIPE 12IN CLASS 51 EPOXY LINED - DI (PR3-D01)	C/51 EPOXY LINED	0
2102	PIPE 12IN CLASS 51 CEMENT LINE - DI (PR3-E01)	C/51 CEMENT LINED	0
2103	PIPE 16IN CLASS 51 EPOXY LINED - DI (YDP-03)	C/51 EPOXY LINED	0
2104	PIPE 16IN CLASS 51 CEMENT LINE - DI (YDP-01)	C/51 CEMENT LINED	0
2105	PIPE 20IN CLASS 51 EPOXY LINED - DI (YDP-02)	C/51 EPOXY LINED	0
2106	PIPE 20IN CLASS 51 CEMENT LIN - DI (YDP-04)	C/51 CEMENT LINED	0
2107	PIPE 18IN CLASS 51 EPOXY LINED - DI (YDP-06)	C/51 EPOXY LINED	0
2108	PIPE 18IN CLASS 51 CEMENT LINE - DI (YDP-05)	C/51 CEMENT LINED	0
2109	PIPE 24IN CLASS 51 EPOXY LINED - DI (YDP-07)	C/51 EPOXY LINED	0
2110	PIPE 24IN CLASS 51 CEMENT LINE - DI (YDP-08)	C/51 CEMENT LINED	0
5775	PIPE 8IN DI EPOXY LINED	EPOXY LINED	0
6104	PIPE 6" CL-51 DI EPOXY LINED (PR4-B01)	CL/51 EPOXY LINED	18
	FIRE HYDRANT & PARTS		
131	COUPLING SAFETY STEM MUELLER 158259 - A-25 HYD PART (B02-01)	158259	5
132	NOZZLE LOCK 5 1/4 FIRE HYD (B02-14) 143137 A13	143137	5
133	PIN 3/32 X 1IN COTTER F/MUEL HYD - A29/195235 (B02-04)	A29/195235	37
134	PIN CLEVIS MUELLER HYD. A30 / 195234 (B02-03) 4 1/2" & 5 1/4"	195234	4
135	O-RING PUMPER NOZZLE A16 1988 - MULLER HYD. 5 1/4 (B02-07)	A16	1
136	O-RING BOTTOM SEAT MUELLER HYD. 4 1/2" A44 / 195161 (B02-06)	195161	0
137	O-RING BOTTOM SEAT MUELLER HYD. 5 1/4" A44 / 142893 (B02-05)	142893	0
138	O-RING M&H 5 1/4 1987 HYD A36 - 2-1/4 X 2-5/8 X 3/16 (B02-08)	A36	2

139	O-RING 4-1/2" & 5 1/4" T MUELLER HYD - A414 / 195271 (B02-09)	195271	23
140	O-RING HOLD DOWN NUT A3 / 194898 MUELLER 4 1/2" & 5 1/4"(B02-10)	194898	24
141	O-RING BONNET A5 / 142779 CENTURION, 4 1/2" & 5 1/4"(B02-16)	142779	54
142	WASHER ANTI-FRICTION A6 / 195546 CENTURION 4 1/2" & 5 1/4"(B02-15)	195546	6
143	GASKET 5-1/4 1988 MUELLER HYD A15 192345 CENTURION (S06-B44)	192345	10
144	HOOK S FOR HYD. 147738 (S06-B23)	147738	51
145	PLUG OIL BRASS A7 / 194932 4 1/2" & 5 1/4" (B02-12)	194932	2
171	O-RING 5 1/4 HYD HOUSING COVER B84B / 84-2-1 (B02-22)	B84B / 84-2-1	0
172	GASKET 5 1/4 HYD.HOUSING COVER B84B / 84-13 SEE PID# 622	B84B / 84-13	0
332	DIFFUSER 2 1/2 IN FOR HYDRANT - POLLARD P67501-100 (B13-A01)	P67501-100	1
548	OIL HYDRANT LUBE 1 GAL. - #51 (S15-A02)		6
573	OPERATING NUT 146430 4 1/2&5 1/4 SUPR CENTURION 1987 OR LATER (S06-B11)	146430	0
574	OPERATING NUT / BRASS - 4 1/2 & 5 1/4 CHATTANOOGA ST 175001 (S06-B14)	175001	0
576	PIN & COTTER PIN F/ROD/COUP - F/AMER/DARL HYD		0
577	COUPLING ROD BREAKABLE 5-1/4 - AMER DAR HYD B84B HRP-3009 (S06-B18)	B84B HRP-3009	0
579	OPERATING NUT 4-1/2 WEATHR CAP - CLOW EDDY 1977 (S06-B19)		0
580	CAP PUMPER NOZZLE - 5 1/4 MUELLER C/I (S06-B21)		0
581	SCREW OIL FOR HOLD DOWN NUT 4 1/2&5 1/4 STANDRD TRAFFIC 190702 (S06-B12)	190702	0
583	BOLT 1/2" x 3" FIRE HYDRANT - BREAK-AWAY TYPE 280049 (S06-B24)	280049	24
584	KIT REPAIR FOR 1989 4-1/2 M&H - HYDRANT/PART 442929 (S06-B27)	442929	0
585	GASKET 2-1/2IN RUBBER - HYDRANT FOR PART # 636,637,638,639 (S06-B28)		10
586	CHAIN & HOOK FOR 5-1/4 A-D - HYDRANT CAP		0
587	CAP HOSE 2-1/2" HYD AMER-DARLING 84-21 (S06-B20)	84-21	1
621	WEATHER SHIELD / RUBBER AMER. DARLING 84-144 5 1/4" (B02-26)	84-144	1
622	FIBER COVER GASKET AMER. DARLING 84-13 5 1/4" (B02-27)	84-13	4
640	HOLD DOWN NUT / BRASS MUELLER 107 HYD. 4", 5", 6" H-118 / 158383 (S06-B39)	158383	0
641	HOLD DOWN NUT 4 1/2 & 5 1/4CHATTANOOGA ST TRAFFIC (LEFT)175082 (S06-B13)	175082	1
642	HOSE NOZZLE 2 1/2 BRASS 4 1/2&5 1/4 CENTURION A18 STANDARD THREAD (S06-B42)	A18	1
643	PUMP NOZZLE 5 1/4 BRASS F/MUELLER 1988 HYD. A-14 (S06-B43)	A-14	0
647	ADAPTER HYD 2 1/2" X 3" SWIVEL (S06-B10)		0
727	HYDRANT EXTENSION 5 1/4" X 18" CLOW / MED *R1620666* (S10-D24)	R1620666	0
740	O-RING / SEAT 84-36-1 5 1/4" AMER. DARLING (B02-30)	84-36-1	2
757	VALVE / HYDRANT 84-41 5 1/4" AMER. DARLING (S06-C37)	84-41	2
758	O-RING / OPERATING NUT M-1/ T2400815 CLOW / MED. 5 1/4" (B02-32)	M-1/ T2400815	11
764	O-RING / THRUST NUT M-28 / T2400948 CLOW / MED. 5 1/4" (B02-33)	M-28 / T2400948	22
765	O-RING / STEM M-31 / T2401026 CLOW / MED. 5 1/4" (B02-34)	M-31 / T2401026	6
768	OPERATING NUT M-3 / 61CLM3 (RIGHT) CLOW / MED. 5 1/4" (S06-B09)	M-3 / 61CLM3	1
824	KIT SAFETY FLANGE REPAIR 4 1/2" MUELR195992 A300-00 PRE-1972 (S09-D01)	195992	0
825	KIT SAFETY FLANGE 5 1/4" MUELLER RTS A301 1972-LATER HRPI-301 (S09-D02)	HRPI-301	2
826	KIT SAFETY FLANGE REPAIR 4 1/2" 1977 CLOW-EDDY F.H. (S09-D03)		1
827	HYDRANT 6" EXTENSION KIT 4 1/2 CLOW MEDALLION R1620658 (S09-D05)	R1620658	0
828	HYDRANT 6" EXTENSION KIT 4 1/2 CLOW/EDDY 1977 HYDRANT (S09-D06)		0
829	HYDRANT 12" EXTENSION KIT 4 1/2" CLOW/EDDY 1977 F.HYD (S09-D08)		0
830	HYDRANT 6" EXTENSION KIT 4 1/2" MUELLER STD. TRAFFIC A337 (S09-D11)	A337	2
831	HYDRANT 6" EXTENSION KIT 5 1/4" MUELLER SUPER FIRE HYD. HRPI-375 CENTURION IMPROVED (S09-D12)	HRPI-375	0
832	HYDRANT 12" EXTENSION KIT 4 1/2" 61MUA319010 / MUELLER SUPER HYD. A319 HRPI-374 CENTURION IMPROVED NEW STYLE (S09-D13)	A319 HRPI-374	2
833	HYDRANT 12" EXTENSION KIT 5 1/4" HRPI-375 A320-010 MUELLER SUPER FIRE HYDRANT CENTURION IMPROVED NEW STYLE (S09-D15)	HRPI-375 A320-010	0

1231	HYDRANT EXTENSION KIT 5 1/4" X 6" WATEROUS PACER WB AMER. DARLING (S09-D16)		0
1264	HYDRANT EXTENSION 4 1/2" X 12" (YD-19)		0
1265	HYDRANT GRADELOK 6" X 24" OFFSET SWIVEL JOINT (YD-08)		0
1266	HYDRANT EXTENSION 5 1/4" X 12" (YD-10)		0
1267	HYDRANT EXTENSION 4 1/2" X 18" STD TRAFFIC A337 (YD-07)	A337	0
1269	OFF-SET 6 X 18 IN MJ (YD-06)		0
1270	HYDRANT ADAPTER 6" X 13" SWIVEL SOLID MJ (YD-13)		11
1271	ELL-SWIVEL 90 6" X 13" MJ X HYD - D/I (YD-09)		0
1650	O-RING BONNET CLOW 5 1/4" HYD. 442 / M32 & M-47 (S06-B30)	M32 & M-47	0
1651	O-RING RUBBER CLOW 5 1/4" HYD. 444 / M-53 T2401040 (S06-B29)	T2401040	0
2169	KIT REPAIR 4 1/2" MAIN VALVE R1620654 / CLOW MED (S09-C08)	R1620654	0
2170	KIT REPAIR 5 1/4" MAIN VALVE 1620655 CLOW MED. (S09-C09)	R1620655	66
2496	KIT REPAIR 5 1/4" FIRE HYD. - AMER DARLING B84B HRPI-473-584 (S09-D04)	B84B HRPI-473-584	1
2683	HYDRANT 12" EXTENSION KIT 5 1/4" CLOW MEDALLION HRPI-475 R1620665 (S09-D09)	R1620665	4
2692	HYDRANT 12" EXTENSION KIT 4 1/2" MUELLER SUPER A337 / 61MUA337010 STANDARD TRAFFIC IMPROVED NEW STYLE (S09-D14)		5
3269	FIRE HYD 4 1/2" MUELLER W 42 B - 604426M3A421	604426M3A421	0
3465	HYDRANT 12" EXTENSION KIT 4-1/2 MK73 AM DARLING 5-1/2 B84-B (S09-D07)	B84-B	0
3521	PIN COTTER SS 3/32" X 1" T0400980 CLOW HYD.	T0400980	0
3522	PIN SS 4 1/2" & 5 1/4" CLOW HYD. T0400891 (B02-11)	T0400891	10
3523	COUPLING MEDALN 4 1/2" & 5 1/4" (B02-13) M2202349	M2202349	0
3692	KIT REPAIR SAFETY FLANGE 5 1/4" CLOW MED. R1620653 (S09-C10)	R1620653	2
3801	MAIN VALVE RING 4 1/2" RUBBER MUELLER H-88 IMPROVED / 195800 (B02-25)	195800	2
3921	DRAIN VALVE FACING MUELLER H-81 IMPROVED 4 1/4", 4 1/2", 5 1/4" 192447 (S06-B46)	192447	0
3922	MAIN VALVE 4 1/4" RUBBER H-88 IMPROVED 190435 MUELLER HYD. (S06-B45)	190435	0
5082	GASKET 3 1/8" OD RUBBER HYD. HOSE CAP T0600547 (S06-B40)	T0600547	49
5083	GASKET 5 3/4" OD RUBBER HYD. STMR CAP T0600548 (S06-B41)	T0600548	20
5084	STEM UPPER 5 1/4" HYDRANT - F/1987 MUELLER 42IN		0
5085	STEM LOWER 5 1/4" HYDRANT - F/1987 MUELLER 42IN		0
5128	FIRE HYD. 5 1/4" CLOW 54" BURY 605546M3 CLMED (YD-05)	605546M3	1
5167	FIRE HYD 5 1/4" CLOW 48" BURY 605486M3 CLMED (YD-87)	605486M3	6
5552	FIRE HYD. 5 1/4" CLOW RED 30" BURY		0
5684	HYDRANT EXTENSION KIT 12" KENNEDY HYD - MODEL K81A 5 1/4"	K81A	0
5779	HYDRANT EXTENSION KIT 12" KENNEDY 81A PART 61KEK81A EXT125	61KEK81A	0
5801	HYDRANT EXTENSION 12" 4 1/2" X 12" MUELLER A322 NON-TRAFFIC	A322	0
5817	CHAIN (ONLY) FOR FIRE HYDRANT CAPS - M-44 T1600709 (S06-B22)	T1600709	64
5831	HYDRANT 6" EXTENSION 5 1/4" VO R1620664 61CLR1620664 CLOW MEDALLION HRPI-475 (S09-D10)	R1620664	1
5915	FIRE HYD. 5 1/4" CLOW 60" BURY		0
5990	O-RING STEM 4 1/2" & 5 1/4" CENTURION A12 / 194514 (B02-02)	194514	30
6052	FIRE HYD. 42" 5-1/4 CLOW 2546-5B (YD-03)	2546-5B	4
6056	OPERATING NUT 4 1/2" & 5 1/4" CENTURION 158477 (S06-B17)	158477	0
6057	WEATHER CAP 4 1/2 & 5 1/4 CENTURION 142818 LEFT (S06-B16)	142818	1
6058	HOLD DOWN NUT / CENTURION 146501 / LEFT (S06-B15)	146501	0
6062	WEATHER SHIELD / RUBBER AMER. DARLING 84-144 6" (B02-19)	84-144	2
6063	FIBER COVER GASKET AMER. DARLING 84-13 6" (B02-20)	84-13	0
6087	OPERATING NUT THRUST WASHER T-020-0669 (B02-17)	T-020-0669	10
6089	O-RING THRUST NUT M-28 T-240-0948 (B02-18)	T-240-0948	17
6090	O-RINGS STEM M-31 T-240-1026 (B02-23)	T-240-1026	0

	FLO-CONTROL HOT TAP SADDLES ONLY		
741	SADDLE HOT TAP 2x1-1/2INx2IN - 3220 FLO CONTROL * 5/BX* (S05-F01)	3220 FLO CONTROL	61
742	SADDLE HOT TAP 2-1/2x1-1/2IN - 3225 FLO CONTROL *5/BX* (S05-F02)	3225 FLO CONTROL	128
743	SADDLE HOT TAP 3 x 1-1/2IN - 3230 FLO CONTROL *5 PER BX* (S05-F03)	3230 FLO CONTROL	59
744	SADDLE HOT TAP 4x1-1/2IN - 3240 FLO CONTROL *5 PER BX* (S05-F04)	3240 FLO CONTROL	20
745	SADDLE HOT TAP 6x1-1/2IN - 3260 FLO CONTROL *5 PER BX* (S05-F05)	3260 FLO CONTROL	11
2213	SADDLE HOT TAP 8x1-1/2-2 - FLO CTL-3280 (S0F-F08)	3280	0
3175	SADDLE HOT TAP 6x1-1/2-2 C-900 - 9260 FLO CONTROL (S05-F07)	9260	5
3176	SADDLE HOT TAP 8 x 1-1/2 C-900 - FLO CONTROL #9280	9280	0
5027	SADDLE HOT TAP 4 X 1 1/2IN-2 F/C-900 PIPE P/N9240 (S05-F06)	9240	1
5888	SADDLE WEDGE 225 - 225 WEDGE (S05-E13)	225 WEDGE	0
5889	SADDLE WEDGE 380 - 380 WEDGE (S05-E14)	380 WEDGE	1
5890	SADDLE WEDGE 480 - 480 WEDGE (S05-E15)	480 WEDGE	0
	GENERAL ITEMS		
61	SPRING FOR CLOW 3" CHECK VALVE T-120-0120 (B01-D13)	T-120-0120	4
76	SPRING FOR CLOW 4" CHECK VALVE T-120-0086 (B01-D14)	T-120-0086	12
77	SPRING FOR CLOW 6" CHECK VALVE T-120-0038 (B01-D15)	T-120-0038	2
326	TEFLON 8 OZ PACKING & - MOLDING COMPOUND (B08-A01)		0
327	LUBRICANT PIPE JOINT 2 LB - 29APLQ (B13-E02)	29APLQ	1
360	CEMENT PORTLAND TYPE II SKU# 169-846 (S01-D02)	SKU# 169-846	2
549	METER LOCKSEAL HEAD - 93280148 ALUM. SEAL (S15-A03)	93280148	3300
550	METER LOCK STUD X-LONG 1-1/2 - 93210142 REGULAR DIA (S15-A04)	93210142	3171
551	LOCK 3/4IN JONES - J-288 (S15-A05)	J-288	0
552	LOCK 3/4IN FOR ANGLE VALVE (S15-A06)		0
553	LOCK 1IN JONES		0
558	GASKET WASHER 3/4 x 1/16IN - RUBBER (S06-B01)		700
559	GASKET WASHER 3/4 x 1/8IN - RUBBER (S06-B02)		4000
560	WASHER-PAPER/FIBER 3/4 X 1/16 - PAPER (S06-B03)		0
562	GASKET WASHER 1 x 1/16IN - RUBBER (S06-B05)		0
563	GASKET WASHER 1 x 1/16IN - PAPER (S06-B06)		0
564	GASKET WASHER 1 x 1/8IN - RUBBER (S06-B07)		200
812	CAP 4IN DAY PVC (S09-A09)		7
813	CAP 6IN DAY PVC SDR26 - TEMP PIPE PLUG #2706 (S09-A10)	2706	4
814	PLUG TEST PNEUMATIC 4IN - 262-048 (S09-A11)	262-048	0
815	PLUG TEST PNEUMATIC 6IN - 262-064 (S09-A12)	262-064	0
816	PLUG TEST PNEUMATIC 8IN - 262-080 (S09-A13)	262-080	0
817	PLUG TEST PNEUMATIC 10IN - 262-110 (S09-A14)	262-110	0
875	GASKET RUBBER 12.75 - F/STEEL COUPLING (S10-A31)		0
876	GASKET RUBBER 14.21-14.40 - F/STEEL COUPLING (S10-A30)		0
2010	VALVE BOX SEWER WITH COVER - 75RC7635 (S07-E07)	75RC7635	0
2152	PRECO PLUG 5/GAL BUCKET - 96THOROC (S13-E04)	96THOROC	6
2201	GASKET 12 X 1/8 IN RED RUBBER - 12 HOLE F/F FG 12 (S11-B14)		2
2680	NUT OPERATING 2 SQ.IN. FOR 4IN - CLOW MJ GATE VALVE (S09-A04)		1
3807	VALVE BOX WATER WITH COVER P/N=7630-125 (S07-E08)	7630-125	2
5473	LOCK SEAL SHANK - LONG - PART #65FMLSSL	65FMLSSL	0
5811	CUTTER RATCHET FOR RS-1 - REED 94051 (B02-82)	94051	0
5812	CUTTER SPRING FOR RS1 - 40142 REED (B02-80)	40142	0
5813	CUTTER NUT FOR RS-1 - REED 30088 (B02-81)	30088	0
5814	CUTTER SPRING FOR RS2 - 40164 REED (B02-79)	40164	0
5982	CONCRETE MIX 80 LB BAG (SAKRETE)		0

6018	GREASE HYDRANT PETRO BLEND FG-2 (S09-B10)	FG-2	242
6068	MARKER WATER BALL 3M 1403XR *30 PER BX* (S09-C03)	1403XR	570
6069	MARKER SEWER BALL 3M 1404XR *30 PER BX* (S09-C07)	1404XR	726
6084	GASKET 16" X 1/8" RED RUBBER (S11-B13)		1
	LIFT STATION PARTS / US FOUNDRY OR APPROVED EQUAL		
808	RAIN GUARD SEWER MANHOLE W/STR - 22 1/2IN OD W/STRAP (S09-A01)		1
1262	RISER MANHOLE 23 1/2 X 1 1/2 - FOR 1 1/4 IN LID (YD-97)		0
1274	MANHOLE RING AND LID - USF-465B *DON'T RE-ORDER* (YD-101)		3
1275	MANHOLE RING & LID 24" * CDPA60EHSSE * SANITARY SEWER (YD-102)	CDPA60EHSSE	1
3625	RISER MANHOLE 22-3/4ID x 1-1/2 - FOR 2IN LID (YD-96)		1
3626	RISER MANHOLE 22-3/4ID x 2-1/2 - FOR 2IN LID		0
3731	RISER MANHOLE 24 X 1 1/2 IN - FOR 1 1/4 IN LID (YD-98)		0
5079	RISER MANHOLE 22-3/4ID x 1IN FOR 2IN #465 LID (YD-94)		2
5742	RISER MANHOLE 22-3/4ID x 2IN - FOR 2IN LID (YD-95)		0
	METER BOXES & LIDS		
354	LID ONLY SINGLE PLASTIC W/CI/R - 1419H	1419H	0
355	LID ONLY DOUBLE PLASTIC W/CI R - 1220H	1220H	0
356	LID ONLY SGL/CI W/CI READER - 36T (YD-78)	36T	3
357	LID ONLY /DUAL-H C.I. COVER (YD-82)		3
420	METER BOX JUMBO PLASTIC - W/CI READER LID (YD-02)		1
1276	METER BX DBL CONCRETE / NO LID (YD-86)		13
1278	METER BX JUMBO CONCRETE (YD-84)		0
1280	LID ONLY JUMBO CONCRETE - W / CONCRETE READER (YD-77)		3
1281	METER BOX SINGLE W/READ LID CONCRETE (YD-85)		5
1282	LID ONLY DOUBLE CONCRETE - DUAL H/CI W/READER (YD-81)	DUAL H	27
1283	LID SINGLE CONCRETE W/CI READ - 36H (YD-83)	36H	4
3189	LID SINGLE CONC. SOLID - 36H (YD-79)	36H	0
5959	LID. METER BOX WC00-1118-2C (YD-80)	WC00-1118-2C	0
6048	LID ONLY DOUBLE/SOLID PLASTIC/OVERLAPPING 117CW (YD-15)	117CW	1576
6049	LID ONLY SINGLE / SOLID OVERLAPPING / PLASTIC 113CW (YD-01)	113CW	600
6050	METER BOX COMPLETE/DOUBLE / SOLID OVERLAPPING LID 117B12CW-3 (YD-16)	117B12CW-3	1624
6051	METER BOX COMPLETE/SINGLE / SOLID OVERLAPPING LID 113BCW (YD-17)	113BCW	546
	METERS, WATER & ALL PARTS		
3	BACKFLOW 3/4IN PREV. RPZ WILKINS 975 XL (S10-B01)	975XL	32
646	BACKFLOW 1IN PREVENTER RPZ WILKINS 975XL BRASS (S10-B02)	975XL	19
650	BACKFLOW 2IN PREVENTER RPZ - WILKINS 975XL BRASS (S10-B04)	975XL	13
5408	LOCK SEAL KEY 93280139 - 65FMLSK (PC-B03)	65FMLSK	68
5608	BACKFLOW 1-1/2IN RPZ PREVENTER - WILKINS 975XL BRASS (S10-B03)	975XL	3
	PIPE, PVC 40, C900		
1093	PIPE 1/2IN SCH40 PVC - 20FT LENGTHS (PR1-B01)		480
1094	PIPE 3/4IN SCH40 PVC - 20FT SILVER LINE (PR5-D01)		22500
1095	PIPE 1IN SCH40 PVC - 20FT SILVER LINE (PR2-E01)		2200
1096	PIPE 3IN SCH40 PVC SILVER LINE (PR4-D01)		6040
1097	PIPE 2IN SCH40 PVC - 20FT SILVER LINE (PR7-D01)		800
1098	PIPE 1-1/4IN SCH40 PVC SILVER LINE (PR2-D01)		3260
1099	PIPE 2-1/2IN SCH40 PVC - 20FT SILVER LINE (PR7-C01)		0
1100	PIPE 1-1/2IN SCH40 PVC - 20FT SILVER LINE (PR5-C01)		22580

1101	PIPE 4IN SCH40 PVC SILVER LINE (PR4-E01)		1540
1102	POLY TUBING 1-1/2IN 200 PSI - 100 FT ROLL (PR7-I01)		0
1103	POLY TUBING 2IN 200 PSI - 100FT ROLLS (PR7-H01)		175
1107	POLY TUBING 1IN 200 PSI - 300FT ROLL DRISCO (YD-105)		12300
1183	PIPE 8IN X 14FT SEWER SDR26 (PR6-J01)	SDR-26	9
1184	PIPE 8IN DR 18-C-900 BLUE PVC (PR6-E01)	DR 18-C-900	33
1189	PIPE 4IN DR18 C-900 BLUE PVC (PR6-C01)	DR18 C-900	50
1190	PIPE 6IN DR-18 C900 BLUE PVC (PR6-D01)	DR-18 C900	122
1191	PIPE 4IN X 14FT SEWER SDR26 (PR6-H01)	SDR-26	9
1192	PIPE 6IN X 14FT SEWER SDR26 (PR6-I01)	SDR-26	42
1402	PIPE 6IN SCH40 PVC (PR7-B01)		58
1407	PIPE 8IN SCH40 PVC - 0508040 (PR7-A01)		0
2095	PIPE 18IN DR18 BLUE C905 CL235 (YDP-15)	DR18	0
2096	PIPE 18IN DR18 GREEN C905 CL235	DR18	0
2097	PIPE 24IN DR18 BLUE C905 CL235 (YDP-17)	DR18	0
2098	PIPE 24IN DR18 [MARKED W/GREEN (YDP-14)	DR18	0
2111	PIPE 12IN DR18 BLUE C900 CL150 - 021218B (PR6-F01)	DR18	74
2112	PIPE 10IN DR18 BLUE C900 CL150 (PR7-F01)	DR18	0
2113	PIPE 16IN DR18 BLUE C905 CL235 (YDP-11)	DR18	0
2114	PIPE 20IN DR18 BLUE C905 CL235 (YDP-16)	DR18	0
2115	PIPE 10IN DR18 GREEN C900 CL150 (YDP-09)	DR18	0
2116	PIPE 12IN DR18 GREEN C900 CL150	DR18	0
2117	PIPE 16IN DR18 GREEN C905 CL235 (YDP-12)	DR18	0
2118	PIPE 20IN DR18 GREEN C905 CL23 (YDP-10)	DR18	5
5770	POLY TUBING 3/4IN 200 PSI - 100FT ROLL (S04-E04)		6
5895	PIPE 20IN DR25 GREEN C905 (YDP-13)	DR25	0
	PLUMBING PARTS / STREAMLINE-MUELLER OR APPROVED EQUAL		
777	TEE 3/4 X 3/4 X 3/4 COPPER WB04031 (S12-D48)	WB04031	15
2824	ESCUTCHEON PLATE-WHITE PVC 3/4" HOLE/PVC PIPE *921-3W* (S12-D36)	921-3W	25
5263	ADAPTER 3/4IN MPT X COPPER - W1146 (S12-D38)	W1146	118
5264	ADAPTER REDUCER 3/4 MPT X 1/2IN C - W1130 COPPER (S12-D37)	W1130	4
5265	ELL 90 DEG 3/4IN COPPER CxC - C9F - W1634 (S12-D39)	W1634	61
5267	FLUX WATER SOLUBLE 16OZ PASTE - 30133 Oatey (S12-D46)	30133 Oatey	12
5321	ESCUTCHEON PLATE 3/4" CHROME - E01075 25/BX (S12-D44)	E01075	0
5322	ESCUTCHEON PLATE - WHITE PVC 3/4in HOLE / COPPER * 920-3W * (S12-D43)	920-3W	10
5323	ADAPTER 3/4IN MPT BRASS x FS - CPVC 6033 (S12-D45)	CPVC 6033	3
5362	CAP 3/4IN COPPER - W7009 (S12-D42)	W7009	2
5750	COUPLING 3/4IN COPPER CxC - CCF- WBO1034 (S12-D40)	WBO1034	27
5751	ELL 45 DEG 3/4IN COPPER CxC - C4F- W3034 (S12-D41)	W3034	0
5752	ADAPTER 3/4IN COPPER CxF - CFAF- W1246 (S12-C33)	W1246	129
5753	REDUCER 1x3/4IN COPPER FTGxC - BUSHING -CRCGF- W1337 (S12-C32)	W1337	0
5754	UNION 3/4IN COPPER CxC - CUF- W8004 (S12-C35)	W8004	1
5755	PIPE 3/4IN COPPER - K HARD F20(PR1-D03)	K HARD	140
5756	COUPLING 1IN COPPER CxC - CCG- W1047 (S12-C36)	W1047	0
5757	ELL 90 DEG 1IN COPPER CxC - C9G- W1647 10/BX (S12-C38)	W1647	10
5758	ELL 45 DEG 1IN COPPER CxC - C4G- W3044 (S12-C37)	W3044	0
5759	ADAPTER 1IN COPPER CxM - CMAG- W1163 (S12-C39)	W1163	90
5760	ADAPTER 1IN COPPER CxF - CFAG- W1263 (S12-C40)	W1263	20
5761	UNION 1IN COPPER CxC - CUG- W8005 10/BX (S12-C41)	W8005	4
5762	PIPE 1IN COPPER - K HARD G20 (PR1-D02)	K HARD	80

5764	ELL 90 DEG 3/4IN COPPER FTGxC - STREET W1654(S12-C34)	W1654	95
5765	ELL 90 DEG 1IN COPPER FTGxC - STREET- CS9G- W2344 (S12-C42)	W2344	28
5836	PIPE 2IN COPPER K-HARD K20 (PR1-D01)	K-HARD	20
5837	COUPLING 2IN CxC COPPER - CCK- W1072 (S12-C46)	W1072	4
5838	ADAPTER MALE 2IN COPPER CxM - W1187 (S12-C45)	W1187	7
5839	ADAPTER FEMALE 2IN COPPER CxF - CFAK- W1287 (S12-C43)	W1287	4
5840	ELL 90 DEG. 2IN COPPER CxC - C9K- W2086 (S12-C44)	W2086	7
	PVC PARTS & FITTINGS / SPEARS OR APPROVED EQUAL		
105	VALVE 3/4IN BALL SXS SCH40 PVC - 2622-007 *SPEARS* (S16-E43)	2622-007	33
106	VALVE BALL 1IN SXS SCH 40 2622-010 *SPEARS* (S16-E44)	2622-010	6
361	ADAPTER 4IN SCH40 TO 4IN SDR26 - PVC (S06-A06)	SDR-26	30
362	REDUCER 6x4IN SxG SDR-26 SEWER (S06-A03)	SDR-26	2
363	REDUCER 8x6IN GASKET ENDS - SDR-26 (S07-A17)	SDR-26	0
364	SADDLE WYE 8x4IN SEWER SDR-26 - GASKET END (S07-A19)	SDR-26	0
369	TEE 8x8x6IN SANITARY - BELL ENDS (S07-A16)		0
372	WYE 6x4IN SINGLE - PVC P601-532 *SPEARS* (S07-A21)	P601-532	0
374	WYE SEWER 6x4x4IN DOUBLE - SDR26 (S07-A20)	SDR-26	3
376	WYE 8x6IN SEWER SDR-26 - GASKET END (S07-A15)	SDR-26	2
379	PLUG 4IN SEWER SPIGOT - PVC (S06-A05)		0
380	CAP 6IN SEWER GASKET END SDR26 - PVC (S07-A25)	SDR-26	0
382	PLUG 6IN SEWER SPIGOT - PVC (S07-A24)		6
384	PLUG 8IN SEWER SPIGOT - SDR-26 (S07-A23)	SDR-26	0
385	COUPLING 4 X 4IN SDR 26 PVC - GASKET END (S06-A07)	SDR-26	5
387	COUPLING 6IN PVC FOR SDR26 - GASKET END (S06-A01)	SDR-26	2
391	ELL 22-1/2 DEG.4IN BELL X BELL - FOR SDR-26 (S06-A09)	SDR-26	0
392	ELL 45 DEG.4IN BELL X BELL PVC - SDR-26 (S06-A08)	SDR-26	0
393	ELL 45 DEG. 4IN BELL X SPIGOT - SDR-26 PVC (S06-A11)	SDR-26	0
394	ELL 45 DEG 6IN BELL X BELL PVC - SDR26 (S06-A02)	SDR-26	0
395	ELL 45 DEG.6IN BELL X SPICKET - 27064GS SDR 26 (S06-A16)	SDR-26	6
396	CLEAN OUT 4 IN S-SDR 26 X THRD - SCH40 PVC *PER EA.* (S06-A12)	SDR-26	5
397	PLUG 3IN THRD SCH40 *FLUSH* - P110-030 CLEANOUT 50/BX *SPEARS* (S06-A13)	P110-030	317
398	PLUG 4IN THRD SCH40 *FLUSH* - P110-40 25/BX *SPEARS* (S06-A14)	P110-40	158
399	PLUG 6IN THRD SCH 40 FLUSH - P110-060 *SPEARS* (S06-A15)	P110-060	11
400	ADAPTER FEMALE 6IN SCH40 PVC - 435-060 *SPEARS* (S06-A32)	435-060	3
401	ADAPTER MALE 6IN SCH/40 436-060 *SPEARS* S06-A31)	436-060	1
402	CAP 6IN SLIP SCH 40 447-060 *SPEARS* (S06-A30)	447-060	2
403	COUPLING 6IN SCH 40 SXS PVC 429-060 *SPEARS* (S06-A29)	429-060	2
404	COUPLING 6IN COMP. SCH40 - 0110-60 *SPEARS* (S06-A28)	0110-60	0
405	ELL 45 DEG.6IN SXS SCH 40 PVC 417-060 * SPEARS* (S06-A27)	417-060	2
406	ELL 90 6IN SxS SCH40 406-060 *SPEARS* (S06-A26)	406-060	6
407	REDUCER 6x4IN SxS SCH40 - 437-532 *SPEARS* (S06-A25)	437-532	8
408	TEE 6IN SLIP SCH40 - 401-060 *SPEARS* (S06-A24)	401-060	0
410	COUPLING 8IN SCH 40 SXS - 429-080 *SPEARS* (S06-A21)	429-080	0
411	ELL 45 DEG.8IN SXS SCH 40 - 417-080 *SPEARS* (S06-A20)	417-080	0
421	COUPLING 4IN SXS SCH40 PVC 429-040 *SPEARS* *6/BX* (S05-A01)	429-040	109
422	ELL 22-1/2 DEG 4IN SxS SCH40 - 416-040 *SPEARS*	416-040	0
423	ELL 45 DEG 4IN SxS SCH40 PVC - 417-040 *SPEARS*	417-040	0
424	ELL 90 4IN SxS SCH40 PVC 406-040 *SPEARS* (S05-A03)	406-040	10
425	PLUG 4 IN THRD SCH40 PVC *5 PER BX* (S05-A04)		0
426	REDUCER 4INx3IN SLIP SCH40 PVC 437-422 *SPEARS* *6/BX* (S05-A07)	437-422	33

427	TEE 4IN SLIP SCH40 PVC 401-040 *SPEARS* (S05-A13)	401-040	2
428	VALVE 4IN CHECK SxS SCH40 - S475P PVC (S05-A14)	S475P	0
429	WYE 4 IN SINGLE DWV PVC (S05-A15)		5
430	COUPLING 3IN SxS SCH40 PVC 429-030 *SPEARS* *10/BX* (S05-B01)	429-030	194
431	ELL 22-1/2 DEG 3IN SxS SCH40 - 416-030 *SPEARS*	416-030	0
432	ELL 45 DEG 3IN SxS SCH 40 PVC - 417-030 *SPEARS*	417-030	0
433	ELL 90 3IN S X S SCH40 PVC 406-030 * SPEARS*	406-030	0
434	PLUG 3IN THRD SCH40 PVC (S05-B04)		0
436	REDUCER 3 X 1-1/2" SxS SCH40 437-337 *SPEARS* (S05-B05)	437-337	1
437	REDUCER 3 X 2IN SxS SCH40 - 437-338 (S05-B06)	437-338	15
438	TEE 3IN SLIP SCH 40 PVC - 401-030 *SPEARS* (S05-B07)	401-030	0
439	VALVE 3IN CHECK SxS SCH40 - PVC (S05-B08)		0
440	WYE 3IN SLIP - DWV SCH 40 P600-030 NON-PRESSURE *SPEARS* (S06-A04)	P600-030	1
441	ADAPTER 4IN FEMALE SCH40 PVC 435-040 *SPEARS* *6/BX* (S05-A08)	435-040	147
442	ADAPTER 4IN MALE SCH40 PVC 436-040 *SPEARS* *5/BX* (S05-A09)	436-040	58
443	CAP 4IN SLIP SCH 40 PVC 6/bx- 447-040 *SPEARS* (S05-A10)	447-040	25
444	CAP 4IN THREADED SCH40 PVC 448-030 6/bx (S05-A11)	448-030	0
445	COUPLING 4IN COMPRESSION PVC SCH-40 S110-40 *SPEARS* (S05-A12)	S110-40	10
446	ELL 22-1/2 DEG. 2IN SxS SCH40 - 416-020 *SPEARS* (S05-C02)	416-020	2
447	ELL 45 DEG. 2IN SxS SCH40 PVC 25bx- 417-020 *SPEARS* (S05-C03)	417-020	46
448	ELL 90 2IN S X FPT SCH40 PVC (S05-C04)		4
449	ELL 2IN 90 ST S X MPT SCH40 PVC (S05-C05)		3
450	ELL 90 2IN SXS SCH40 25/bx 406-020 *SPEARS* (S05-C06)	406-020	41
451	ELL 2IN 90 ST FPT X MPT SCH40 PVC (S05-C07)		2
452	PLUG THRD 2IN SCH40 - 450-020 10/BX *SPEARS* (S05-C08)	450-020	14
453	TEE 2IN SLIP SCH40 401-020 *SPEARS* (S05-C09)	401-020	17
454	VALVE 2IN CHECK SXS SCH 40 - 1520-020 (S05-C10)	1520-020	4
455	COUPLING 2-1/2IN SxS SCH40 PVC 429-025 *SPEARS* *12/BX* (S05-C24)	429-025	4
456	COUPLING 2-1/2IN COMP SCH40 S110-25 *SPEARS* *6/BX* (S05-C20)	S110-25	0
457	ADAPTER 3IN FEMALE SCH40 PVC 435-030 *SPEARS* *10/BX* (S05-B10)	435-030	274
458	ADAPTER 3IN MALE SCH40 PVC 436-030 *SPEARS* *10/BX* (S05-B12)	436-030	83
459	CAP 3IN SLIP SCH40 PVC 10/bx- 447-030 *SPEARS* (S05-B13)	447-030	94
460	CAP 3IN THREADED SCH40 PVC - 448-030 *SPEARS* (S05-B14)	448-030	4
461	COUPLING 3IN COMP SCH40 PVC - S110-30 *SPEARS* *4/BX* (S05-B15)	S110-30	2
462	ELL 90 1-1/2IN ST SxMPT SCH40 - 410-015 *SPEARS* (S05-D01)	410-015	3
463	ELL 90 1-1/2IN SXS SCH40 PVC 406-015 *SPEARS* *25/BX* (S05-D02)	406-015	245
464	SWEEP 90 1-1/2IN SxS SCH40 - D304-015 *SPEARS* (S05-D04)	D304-015	16
465	ELL 90 1-1/2IN ST MPTxFPT SCH40 - 412-015 *SPEARS* (S05-D05)	412-015	0
466	TEE 1-1/2IN SLIP SCH40 PVC 401-015 25/bx *SPEARS* (S05-D06)	401-015	45
467	PLUG 1-1/2IN THRD SCH40 PVC - 450-015 *SPEARS* (S05-D07)	450-015	11
468	VALVE BALL 1-1/2IN SxS SCH40 2622-015 *SPEARS* *20bx* (S05-D09)	2622-015	243
469	VALVE 1-1/2IN CHECK SXS 1520C-15 *CLEAR* FLO CONTROL *12BX* (S05-D10)	1520C-15	329
470	ADAPTER FEMALE 2IN SCH40 PVC 435-020 *SPEARS* *10/BX* (S05-C11)	435-020	12
471	ADAPTER 2IN MALE SCH40 PVC - 436-020 *SPEARS* *25/BX* (S05-C13)	436-020	76
472	REDUCER MALE 2x1-1/2 SxMPT 436-251 SCH40 *SPEARS* *10/BX* (S05-C19)	436-251	9
473	CAP 2IN SLIP SCH40 PVC 447-020 *SPEARS* *10 PER BX* (S05-C15)	447-020	28
474	CAP 2IN THREADED SCH40 448-020 10/BX *SPEARS* (S05-C16)	448-020	10
475	COUPLING 2IN COMP SCH40 PVC - 0110-20 *SPEARS* *12/BX* (S05-C12)	0110-20	15
476	COUPLING 2IN SCH40 SXS PVC - 429-020 *SPEARS* *25/BX* (S05-C17)	429-020	52
477	ELL 45 DEG 1IN SxS SCH40 PVC 50/bx- 417-010 *SPEARS* (S05-E01)	417-010	95
478	ELL 90 1IN SxFPT SCH40 PVC - 407-010 *SPEARS* (S05-E02)	407-010	5

479	ELL 90 1IN ST SxMPT SCH40 PVC 50/bx- 410-010 *SPEARS* (S05-E03)	410-010	24
480	ELL 90 1IN SxS SCH40 PVC - 406-010 *SPEARS* *50 PER BX* (S05-E04)	406-010	421
481	ELL 90 1IN STREET MPTxFPT SCH40 412-010 PVC (S05-E05)	412-010	2
482	ELL 90 1IN FPTxFPT SCH40 PVC (S05-E06)		2
483	PLUG 1IN SLIP SCH40 PVC 449-010 *SPEARS* (S05-E07)	449-010	0
484	PLUG 1IN THRD SCH40 PVC - 450-010 *SPEARS* (S05-E08)	450-010	0
485	TEE 1IN SLIP SCH40 PVC - 401-010 *SPEARS* *50 PER BX* (S05-E09)	401-010	59
486	COUPLING 1-1/4IN SXS SCH40 PVC - 429-012 *SPEARS* 25BX (S05-E10)	429-012	1149
487	ADAPTER MALE HOSE 1-1/2IN PVC - 1436-015 25/BX *SPEARS* (S05-D08)	1436-015	52
488	ADAPTER 1-1/2IN FEMALE SCH40 - 435-015 *SPEARS* *25/BX* (S05-D11)	435-015	35
489	ADAPTER 1-1/2IN MALE SCH40 PVC 436-015 SPEARS 25/BX (S05-D12)	436-015	261
490	REDUCER ADAPT 1-1/4 x 1-1/2 SxMPT 436-169 *SPEARS* *25/BX* (S05-D18)	436-169	82
491	CAP 1-1/2IN SLIP SCH40 PVC 25/bx- 447-015 *SPEARS* (S05-D13)	447-015	62
492	CAP 1-1/2IN THREADED SCH40 PVC 448-015 *SPEARS* 25BX (S05-D14)	448-015	113
493	COUPLING 1-1/2 IN COMPRESSION S110-15 *SPEARS* *16/BX* (S05-D15)	S110-15	33
494	COUPLING 1-1/2IN SxS SCH40 PVC 429-015 *SPEARS* 25BX (S05-D16)	429-015	1659
495	CROSS 1-1/2IN SLIP SCH40 PVC - 420-015 *SPEARS* *25 PER BX* (S05-E18)	420-015	83
496	ELL 45 DEG 1-1/2IN SxS SCH40 417-015 *SPEARS* *25BX* (S05-E19)	417-015	2245
497	ELL 90 1-1/2IN STREET S x FPT PVC 407-015 SCH40 *SPEARS* *25/BX*(S05-D17)	407-015	64
498	ADAPTER FEMALE 1/2IN SCH40 PVC - 435-005 50/BX *SPEARS* (S14-D02)	435-005	6
499	ADAPTER MALE 1/2IN SCH40 PVC - 436-005 *SPEARS* (S14-D03)	436-005	21
500	COUPLING 1/2IN SxS SCH40 - 429-005 *SPEARS* (S14-D05)	429-005	16
501	ELL 45 DEG 1/2IN SxS SCH40 PVC - 417-005 *SPEARS* (S14-D07)	417-005	6
502	ELL 90 DEG 1/2IN SxFPT SCH40 - 407-005 *SPEARS* (S14-D01)	407-005	7
503	ELL 90 DEG.1/2IN MPTXS SCH40 - PVC 410-005 *SPEARS* (S14-D04)	410-005	5
504	ELL 90 DEG 1/2IN SxS SCH40 PVC - 406-005 50/BX *SPEARS* (S14-D10)	406-005	13
505	ADAPTER FEMALE 3/4IN SCH40 PVC - 435-007 *SPEARS* (S14-D11)	435-007	70
506	ADAPTER MALE 3/4IN SCH40 PVC - 436-007 *SPEARS* *50 PER BX* (S14-D12)	436-007	2563
507	CAP 3/4IN SLIP SCH40 PVC - 447-007 50/BX *SPEARS* (S14-D09)	447-007	289
508	CAP 3/4IN THREADED SCH40 PVC - 448-007 *SPEARS* (S14-D14)	448-007	7
509	COUPLING 3/4IN COMPRESSION PVC - S110-07 *SPEARS* (S14-D16)	S110-07	16
510	COUPLING 3/4IN SxS SCH40 429-007 50/BX *SPEARS* (S14-D08)	429-007	829
511	COUPLING 3/4IN FPTxFPT SCH40 - 430-007 *SPEARS* (S14-D13)	430-007	8
512	CROSS 3/4IN SLIP SCH40 PVC - 420-007 *SPEARS* (S14-D19)	420-007	20
513	ELL 45 DEG 3/4IN SxS SCH40 417-007 *SPEARS* *50 PER BX* (S14-D20)	417-007	837
514	ELL 90 3/4IN FPTxS SCH40 PVC - 407-007 *SPEARS* (S14-D17)	407-007	139
515	ELL 90 DEG 3/4IN FPTxMPT SCH40 412-007 50/BX *SPEARS* (S14-D18)	412-007	122
516	ELL 90 3/4IN STR SxMPT SCH40 - 410-007 50/BX *SPEARS* (S14-D24)	410-007	250
517	ELL 90 3/4IN SxS SCH40 PVC - 406-007 *SPEARS* *50 PER BX* (S14-D25)	406-007	2898
518	PLUG 3/4IN THRD SCH40 PVC - 450-007 *SPEARS* *PER EA.* (S14-D21)	450-007	3
519	TEE 3/4IN SLIP SCH 40 - 401-007 *SPEARS* (S14-D22)	401-007	70
520	ADAPTER 3/4x1IN - MPTxS - SCH40 436-102 50/BX *SPEARS* (S14-D29)	436-102	143
521	ADAPTER FEMALE 1IN SCH40 PVC - 435-010 *SPEARS* (S14-D26)	435-010	20
522	ADAPTER MALE 1IN SCH40 PVC - 436-010 50/BX *SPEARS* (S14-D27)	436-010	199
523	ADAPTER FEMALE 3/4x1IN SCH40 435-131 50/BX *SPEARS* (S14-D28)	435-131	4
524	CAP 1IN SLIP SCH40 PVC - 447-010 *SPEARS* *50 PER BX* (S14-D30)	447-010	128
525	CAP 1IN THREADED SCH40 PVC 448-010 *SPEARS* (S14-D31)	448-010	3
526	COUPLING COMP 1IN SCH40 PVC - S110-10 *SPEARS* (S14-D32)	S110-10	0
527	COUPLING 1IN SxS SCH40 PVC - 429-010 *SPEARS* *50 PER BX* (S14-D33)	429-010	537
528	REDUCER 2 x 1-1/2IN MPTxFPT SCH40 - 439-251 *SPEARS* (S14-D34)	439-251	0
529	REDUCER 2x 1-1/2IN SxF SCH40 - PVC (S14-D38)		7

530	REDUCER 2 x 1-1/2IN SxS SCH40 - 437-251 25/BX *SPEARS* (S14-D36)	437-251	55
531	REDUCER 2x1IN SxFPT SCH40 PVC (S14-D37)		13
532	REDUCER 2x1IN MPTxFPT SCH40 PVC - 439-249 *SPEARS* (S14-D40)	439-249	6
533	REDUCER 2x1IN SxS SCH40 * 437-249* (S14-D35)	437-249	3
534	REDUCER 2 x 3/4IN SxFPT SCH40 PVC (S14-D39)		10
535	REDUCER 2x 3/4IN SxS SCH40 PVC 437-248 *SPEARS* (S14-D44)	437-248	10
536	REDUCER 1-1/2x1-1/4 SxS - 437-212 *SPEARS* *25 PER BX* (S14-D50)	437-212	729
537	REDUCER 1-1/2 x 1IN MPTxFPT SCH40 - 439-211 *SPEARS* (S14-D47)	439-211	23
538	REDUCER 1-1/2 x 1IN SxFPT SCH40 - 438-211 25/BX *SPEARS* (S14-D53)	438-211	32
539	REDUCER 1-1/2 X 1IN SXS SCH40 437-211 25/bx *SPEARS* (S14-D46)	437-211	25
540	REDUCER 1-1/2 x 3/4IN MPTxFPT SCH40 - PVC 439-210 (S14-D45)	439-210	3
541	REDUCER 1-1/2 x 3/4IN SxFPT SCH40 - PVC (S14-D51)		1
542	REDUCER 1-1/2x 3/4IN SxS SCH40-437-210 25/bx (S14-D54)	437-210	9
543	REDUCER 1 x 3/4IN SxFPT SCH40 - 438-131 (S14-D43)	438-131	7
544	REDUCER 1x3/4IN SxS SCH40 PVC - 437-131 *SPEARS* *50 PER BX* (S14-D52)	437-131	268
545	REDUCER 3/4INx1/2IN SxS SCH40 437-101 *SPEARS* *50 PER BX* (S14-D49)	437-101	31
546	REDUCER 1/2 x 1/4IN SxFPT SCH40 - 438-072 (S14-D41)	438-072	24
737	VALVE BALL 4 IN SxS SCH40 2622-040 *SPEARS* (S05-A16)	2622-040	0
1258	CLEANOUT 2 WAY 3" SXSXS SCH40 D448-030 10/BX *LESCO ONLY* (S05-C25)	D448-030	118
1259	CLEANOUT 2 WAY 4" SXSXS SCH40 D448-040 5/BX *LESCO ONLY* (S05-F09)	D448-040	87
1400	WYE 6IN SXS SCH/40 P600-060 *SPEARS* (S06-A23)	P600-060	0
1401	ADAPTER MALE 8IN SCH/40 - PVC (S06-A17)		0
1403	WYE 3IN SxS SCH 40 PVC - 475-030 PRESSURE *SPEARS* (S05-B09)	475-030	1
1404	ELL 90 8IN SXS SCH 40 - PVC 406-080 (S06-A19)	406-080	0
1405	ADAPTER FEMALE 8IN SCH/40 - PVC (S06-A18)		0
1614	TEE SANITARY 3IN SxSxS PVC - P400-030 *5 PER BX* (S04-C24)	P400-030	0
1615	TEE SANITARY 4IN SxSxS PVC - P400-040 *5 PER BX* (S04-C25)	P400-040	0
1798	COUPLING 8IN PVC FOR SDR35 - GASKET END (S07-A22)	SDR-26	0
1843	REDUCER 3/4x1/4IN SxFPT SCH40 PVC 438-098 *SPEARS* (S14-D42)	438-098	5
1938	ADAPTER HOSE 3/4IN SCH40 PVC - 1436-007 GRAY *SPEARS* (S16-E28)	1436-007	11
1939	ELL 90 3/4IN MxHOSE BARB SCH40 - 1413-007 *SPEARS* (S16-E29)	1413-007	0
2004	CROSS 2IN SLIP PVC SCH 40 - 420-020 (S05-C14)	420-020	0
2032	REDUCER 1 1/2 x 1-1/4 SxFPT SCH40 - 438-212 (S14-D48)	438-212	2
2742	CAP 1/2IN SLIP SCH40 PVC 447-005 (S14-D06)	447-005	14
3929	TEE 3/4X3/4X1/2IN SXSXF 402-101 (S14-D15)	402-101	3
3930	TEE 1x1x3/4IN SxSxFPT SCH40 402-131 (S05-E12)	402-131	18
5268	TEE 3/4IN SxSxFPT SCH40 50/BX *SPEARS* 402-007 (S14-D23)	402-007	279
5569	ELL 90 4IN BELL X SPIGOT - SDR-35 PVC (S06-A10)	SDR-26	0
5641	CAP 8IN SLIP PVC SCH 40 (S06-A22)		0
5695	VALVE 2IN BALL SxS PVC - 2622-020 *SPEARS* (S05-C18)	2622-020	7
5793	REDUCER 8x4 SCH40 PVC - PART #2908040RS040H	2908040RS040H	0
5796	ELL 45 DEG. 2-1/2IN SxS SCH40 - 417-025 (S05-C21)	417-025	0
5797	ELL 90 2-1/2IN SCH40 SxS (S05-C23)		0
5798	REDUCER 2-1/2 x 2IN SCH40 SxS - 437-292 (S05-C22)	437-292	13
5799	REDUCER 3 x 2-1/2IN SCH40 SxS - 437-339 (S05-B11)	437-339	8
5909	SWEEP 90 DEG 3 IN SxS SCH40 - D300-030 DWV (S05-B16)	D300-030	26
5910	SWEEP 45 DEG 3IN SxS SCH40 - P321-030 DWV *25 PER BX* (S06-F07)	P321-030	336
5911	SWEEP 22 1/2 DEG 3IN SxS SCH40 P324-030 DWV *20/BX* (S05-B02)	P324-030	117
5912	SWEEP 90 DEG 4IN SxS SCH40 10/bx- D300-040 DWV (S05-A02)	D300-040	14
5913	SWEEP 45 DEG 4IN SxS SCH40 - P321-040 DWV *15 PER BX* (S05-A05)	P321-040	116

5914	SWEEP 22 1/2 DEG 4IN SxS SCH40 - P324-040 DWV *15/BX* (S05-A06)	P324-040	69
5924	SADDLE HOT TAP 2-1/2X1-1/2 IN - SPEARS HT2-291 (S08-B17)	HT2-291	0
6016	ELL 90 DEG 1 1/4 SCH 40 SXS 406-012 25/bx *SPEARS* (S05-E11)	406-012	106
6024	CLEAN OUT ADAPTER 6" SDR 26 *P1406* (S07-A18)	SDR-26	7
656	FERNCO 2 x 2IN PVC TO PVC (S07-A01)		0
657	FERNCO 3IN PVC TO PVC - 1056-33 (S07-A02)	1056-33	22
658	FERNCO CLAY TO PVC 4 x 3IN (S07-A03)		3
659	FERNCO 4IN PVC TO PVC - 1056-44 (S07-A04)	1056-44	52
660	FERNCO 4IN CLAY TO PVC - 1002-44 (S07-A05)	1002-44	14
661	FERNCO 4IN CLAY TO CLAY (S07-A06)		3
662	FERNCO 6IN PVC TO PVC - 1056-66 (S07-A07)	1056-66	3
663	FERNCO 6IN CLAY TO PVC - 1002-66 (S07-A08)	1002-66	2
664	FERNCO 6IN CLAY TO CLAY (S07-A09)		0
665	FERNCO 6 X 8 IN PVC TO PVC (S07-A10)		0
667	FERNCO 8 x 8IN PVC TO PVC (S07-A12)		2
668	FERNCO 8IN CLAY TO PVC (S07-A13)		7
671	FERNCO 10X10IN CLAY TO PVC (S07-A14)		0
672	DONUT 3IN RUBBER SWCI X SCH 40 - INDIANA SEAL (S08-A09)		0
673	DONUT 4IN RUBBER CLAY BELL X - XHC/I C/BELL#432-405 (S08-A08)	432-405	0
674	DONUT 4IN RUBBER CLAY BELL X - SWC/I DICKEY BELL PVW #404 (S08-A07)	404	0
675	DONUT 4IN RUBBER CLAY BELL X - SWC/I GRIFFEN C/BELL (S08-A06)		0
676	DONUT 6IN RUBBER DICKEY - CLAY BELL #608 (S08-A05)	608	0
677	DONUT 6IN RUBBER GRIFFIN - CLAY BELL #604-609 (S08-A04)	604-609	0
678	DONUT 6 IN RUBBER 6 X 4 IN - INDIANA SEAL CS604-41 (S08-A03)	CS604-41	0
679	DONUT 8IN RUBBER INDIANA SEAL - #C5898-85 (S08-A02)	C5898-85	0
681	CLAMP REPAIR H/C 3/4 X 3 IN SS - 245-00010503-0 (S07-B01)	245-00010503-000	0
682	CLAMP REPAIR F.CIR 3/4x 3IN SS - #244-00010503-000 12/BX (S07-B02)	244-00010503-000	384
683	CLAMP REPAIR H/C 3/4 X 6 IN SS - 245-00010506-0 (S07-B03)	245-00010506-000	0
684	CLAMP REPAIR F/C 3/4 X 6 IN SS - 244-00010506-000 (S07-B04)	244-00010506-000	0
685	CLAMP REPAIR H/C 1 X 3 IN SS - 245-00013203-0 (S07-B05)	245-00013203-000	1
686	CLAMP REPAIR 1x3IN SS FULL CIRCLE - 244-013203-000 SB (S07-B06)	244-013203-000	5
687	CLAMP REPAIR F/C 1 X 6 IN SS - 244-00013206-000 (S07-B07)	244-00013206-000	0
688	CLAMP REPAIR H/C 1-1/2 X 3 IN - 245-00019003-0 (S07-B08)	245-00019003-000	2
689	CLAMP REPAIR F/C 1-1/2 X 3 IN - 244-00019003-000 *6 PER BX* (S07-B09)	244-00019003-000	3
690	CLAMP REPAIR H/C 1-1/2 X 6 IN - 245-00019006-0 (S07-B10)	245-00019006-000	0
691	CLAMP REPAIR F.C. 1-1/2 x 6IN - 244-00019006-000 (S07-B11)	244-00019006-000	0
692	CLAMP REPAIR F/C 1-1/2X7-1/2IN - 1.88-1.92 (S07-B12)		0
693	CLAMP REPAIR H/C 2 X 3 IN SS - 245-00023803-0 (S07-B15)	245-00023803-000	0
694	CLAMP REPAIR 2 x 3IN SS FULLCIRCLE #244-00023803-000 *6 PER BX* (S07-B16)	244-00023803-000	1
695	CLAMP REPAIR 2 X 6 IN SS - 245-00023806-0 (S07-B17)	245-00023806-000	0
696	CLAMP REPAIR F/C 2 X 6 IN SS - 244-00023806-000 (S07-B18)	244-00023806-000	0
697	CLAMP REPAIR 2 X 7-1/2 IN SS - 2.35-2.63 (S07-B19)		0
698	CLAMP REPAIR 2 X 12 IN SS - 245-00023812-0 (S07-B20)	245-00023812-000	0
699	CLAMP REPAIR F/C 2 X 12-1/2 IN - 2.35-2.63 (S07-B21)		0
700	CLAMP REPAIR S/B 3 X 12-1/2 IN - 226-00035012-000 (S07-B23)	226-00035012-000	1
701	CLAMP REPAIR 3 x 15IN S.S. - 3.46-3.70 FULL CIRCLE (S07-B24)		0
703	CLAMP REPAIR S/B 4X12-1/2IN SS - 4.74-5.14 (S07-C03)		1
704	CLAMP REPAIR S/B 4 X 15 IN SS - 4.95-5.35 (S07-C04)		1
705	CLAMP REPAIR S/B 4x15IN SS - 4.45-4.73 (S07-C05)		4

706	CLAMP REPAIR S/B 4x15IN SS - O.D.RANGE 4.74-5.14 (S07-C06)		0
707	CLAMP REPAIR S/B 6 X 7-1/2 IN - 6.56-6.96 (S07-C07)		0
709	CLAMP REPAIR 6 X 15IN SINGLE BAND - 6.84-7.24 FORD SS (S07-C10)		4
710	CLAMP REPAIR 6x15IN 7.05-7.45 #226-071015-000 (S07-C11)	226-071015-000	0
711	SLEEVE 6X6X6 TAPPING (S07-C12)		0
712	SLEEVE 8X6X8 TAPPING 8.63-9.05 - FORD FAST-905X6 (S07-C13)	905X6	0
713	CLAMP REPAIR D/B 8 X 10 IN SS - 8.99-9.39 (S07-C14)		0
714	CLAMP REPAIR S/B 8 X 15 IN SS - 8.54-8.94 (S07-C15)		0
715	CLAMP REPAIR 8x15IN 8.99-9.39 - #226-090515-000 (S07-C16)	226-090515-000	0
717	CLAMP REPAIR S/B 8 X 15 IN SS - FORD F1-967X15 (S07-C17)	967X15	0
718	CLAMP REPAIR S/B SS 10 X 15 9.70-10.10 (S07-D01)		0
719	CLAMP REPAIR D/B 10 X 15 IN SS - 10.70-11.50 D/B (S07-D02)		0
720	CLAMP REPAIR S/B 10 X 16 IN SS - 11.04-11.44 S/B (S07-D03)		0
721	CLAMP REPAIR D/B 10" X 15 " SS - 11.60-12.40 (S07-D04)		0
722	CLAMP REPAIR S/B 12 X 12-1/2IN - 14.00-14.40 S/B (S07-D05)		1
723	CLAMP REPAIR D/B 12 X 15 IN SS - 12.70-13.50 D/B (S07-D06)		1
724	CLAMP REPAIR S/B 12 X 15 13.10-13.50 226-00132015000 (S07-D07)	226-00132015000	1
725	CLAMP REPAIR D/B 12 X 15 IN SS - 13.65-14.45 D/B (S07-D08)		0
726	CLAMP REPAIR S/B 12 X 15 IN SS - 14.00-14.40 S/B (S07-D09)		0
728	CLAMP REPAIR D/B 16 X 15 IN SS - 17.15-17.90 (S07-D10)		0
729	CLAMP REPAIR D/B 16 X 15 IN SS - 18.46-19.21 (S07-D11)		0
730	CLAMP REPAIR D/B 16 X 20IN SS - 17.15-17.90 (S07-D12)		0
731	CLAMP REPAIR D/B 18 X 15IN SS - 18.46-19.21 (S07-E01)		0
732	CLAMP REPAIR D/B 18 X 15IN SS 19.23-19.98 228-20192315-000 (S07-E03)	228-20192315-000	0
733	CLAMP REPAIR D/B 20 X 30IN SS - 21.52-22.27 (S07-E04)		0
789	COUPLING 4 FLG ADAP.4.74-4.90 - 912-00048004-000 (S08-D07)	912-00048004-000	0
799	COUPLING 10IN QUANTUM - 10.64-11.97 461-10641197 (S08-D16)	461-10641197	0
801	COUPLING 10IN D/I 11.55-12.12 - D/I (S08-E02)		0
805	COUPLING 12IN D/I 13.92-14.26 - D/I (S08-E05)		0
838	CLAMP 4IN BELL JOINT LEAK-4.80 - 274-00000480-000 (S09-E01)	274-00000480-000	0
839	CLAMP 6IN BELL JOINT LEAK-6.90 - 274-00000690-000 (S09-E02)	274-00000690-000	0
840	CLAMP 8IN BELL JOINT LEAK - 9.05-9.30 (S09-E03)		0
841	CLAMP 10IN BELL JOINT LEAK - 11.10-11.40 (S09-E04)		0
842	CLAMP 12IN BELL JOINT LEAK - 13.20-13.50 (S09-E05)		0
843	CLAMP 16IN BELL JOINT LEAK - 17.40-17.80 (S09-E07)		0
844	CLAMP 18IN BELL JOINT LEAK - 19.50-19.92 (S09-E08)		0
1461	COUPLING 8IN MAXI-FIT - 8.59-9.25 (S08-D15)		0
3541	CLAMP REPAIR F/C 1-1/2X 12-1/2 - 1.88-1.92 (S07-B13)		0
3542	CLAMP REPAIR F/C 1-1/2 X 15 IN - 1.88-1.92 n/l/a (S07-B14)		0
3543	CLAMP REPAIR F/C 2 X 15 IN SS - 2.35-2.63 (S07-B22)		0
4116	COUPLING 6IN QUANTUM 6.54-7.65 PART #46106300740 (S08-D10)	46106300740	4
5023	COUPLING 8IN QUANTUM 8.54-9.85 PN #461-08540960-000 (S08-D14)	461-08540960-000	0
5045	COUPLING 4IN QUANTUM 4.46-5.60 PN=461-04290535-000 (S08-D08)	461-04290535-000	11
5139	CLAMP REPAIR S/B 6.56-6.96 226-066307-000 SM/BL (S07-C08)	226-066307-000	1
5517	COUPLING 12IN QUAN 12.75-14.40 - 461-1275144 0000 (S08-E03)	461-1275144 0000	0
5606	CLAMP REPAIR D/B 16 X 15 IN SS - 263-171515-000 (S07-E02)	263-171515-000	0
5769	CLAMP REPAIR 6x15IN SINGLE BAND - 6.56-6.96 226-066315-000 (S07-C09)	226-066315-000	1
5833	COUPLING 16IN REPAIR HYMAX		0
5907	COUPLING 16 IN MAXI-FIT - 74MFC1728 (S09-E09)	74MFC1728	0
5940	CLAMP 20" BELL JOINT LEAK CLAMP SMITH BLAIR # 274-2160-000 (S07-E05)	274-2160-000	0
5941	CLAMP 24" BELL JOINT LEAK CLAMP SMITH BLAIR# 274-2580-000 (S07-E06)	274-2580-000	0

5942	CLAMP 3/4" X 3" FULL CIRCLE 244-008803-000 *16 PER BX* (S07-C01)	244-008803-000	25
5943	CLAMP 3/4"X 6" FULL CIRCLE 244-008806-001 (S07-C02)	244-008806-001	0
5962	GASKET FOR 12" COUPLING #33820 BLUE (S11-C13)		0
5976	COUPLING HYMAX 6IN 6.42-7.68 (S08-D11)		2
6094	COUPLING 4" 4.22-5.60 #242-0550 (S08-D09)	242-0550	4
6095	COUPLING 6" 6.28-7.80 #242-0760 (S08-D12)	242-0760	2
6096	COUPLING 8" 8.40-9.75 #242-0960 (S08-D13)	242-0960	2
6097	COUPLING 10" 10.50-12.12 #242-1200 (S08-D17)	242-1200	0
6098	COUPLING 12" 12.50-14.38 #242-1430 (S08-E04)	242-1430	0
6099	COUPLING 16" 17.32-19.20 #242-1920 (S08-E06)	242-1920	0
	SCH 80 PIPE & ALL FITTINGS / SPEARS OR APPROVED EQUAL		
557	COUPLING 6" SxS SCH80 PVC - 829-060 *SPEARS* (S17-A03)	829-060	8
669	REDUCER 1 1/4" X 1" SCH80 837-168 *25 BX* (S16-D22)	837-168	4
1026	REDUCER BUSHING 1 X 1/4" MXF SCH80 839-128 25/bx *SPEARS* (S16-E37)	839-128	1
1028	REDUCER BUSHING 1 X 1 1/4" MXF SCH80 839-168 25/bx *SPEARS* (S16-E38)	839-168	1
1053	NIPPLE 1-1/2 x 8IN TBE SCH80 - 886-080 *SPEARS* EA 25/BOX (S16-D01)	886-080	35
1059	NIPPLE 3/4 X CL TBE SCH80 PVC - PART #207-016 (S16-E33)	207-016	1
1060	NIPPLE 3/4 X 2IN TBE SCH80 PVC - PART #207-020 (S16-E34)	207-020	2
1061	NIPPLE 3/4 X 3IN TBE SCH80 PVC - PART #207-030 (S16-E32)	207-030	1
1062	NIPPLE 3/4 X 4IN TBE SCH80 PVC - PART #207-040 (S16-E31)	207-040	0
1063	NIPPLE 3/4 X 6IN TBE SCH80 PVC - PART #207-060 (S16-E30)	207-060	0
1064	NIPPLE 1IN X CL SCH80 PVC 884-005 *SPEARS* (S16-E05)	884-005	15
1065	NIPPLE 1IN X 2IN TBE SCH80 PVC - PART #210-020 (S16-D15)	210-020	0
1066	NIPPLE 1IN X 3IN TBE SCH80 PVC - PART #210-030 (S16-E03)	210-030	3
1067	NIPPLE 1IN X 4IN TBE SCH80 PVC - PART #210-040 (S16-D18)	210-040	0
1068	COUPLING 1IN SCH80 PVC GRAY - HOSE BARBxHOSE BARB (S16-E02)		0
1069	NIPPLE 1-1/4 IN X CL TBE SCH80 - 885-005 *SPEARS* (S16-D09)	885-005	0
1070	NIPPLE 1-1/4 X 2IN TBE SCH80 - PART #212-020 (S16-D10)	212-020	0
1071	NIPPLE 1-1/4 X 3IN TBE SCH80 - 212-030 (S16-D11)	212-030	2
1072	NIPPLE 1-1/2 X 2IN TBE SCH80 - PART #215-020 (S16-C17)	215-020	0
1073	NIPPLE 1-1/2 X 3IN TBE SCH80 - PART #215-030 (S16-D02)	215-030	3
1074	NIPPLE 1-1/2 X 4IN TBE SCH80 886-040 *SPEARS* (S16-C08)	886-040	0
1075	NIPPLE 2IN X CL TBE SCH80 PVC - PART #220-016 (S16-C05)	220-016	0
1076	NIPPLE 2IN X 3IN TBE SCH80 PVC 887-030 (S16-C02)	887-030	4
1077	NIPPLE 2IN X 4IN TBE SCH80 PVC - 887-040 *SPEARS* (S16-C03)	887-040	0
1078	NIPPLE 3IN X CL TBE SCH80 PVC - 889-005 (S16-A08)	889-005	7
1079	NIPPLE 4IN X CL TBE SCH80 PVC - 890-005 (S17-A08)	890-005	0
1080	ELL 90 1-1/2IN SLIP SCH80 PVC - 806-015 10/BX *SPEARS* (S16-C09)	806-015	36
1081	COUPLING 1-1/2IN SxS SCH80 PVC 10/BX 829-015 *SPEARS* (S16-C13)	829-015	17
1082	COUPLING 1-1/2IN FPTxFPT SCH80 - PVC #830-015 *SPEARS* (S16-C10)	830-015	0
1083	TEE 1-1/2IN SLIP SCH80 PVC - 801-015 *SPEARS* (S16-C15)	801-015	12
1084	UNION 2IN SCH80 PVC FPTxFPT 858-020 5/BX *SPEARS* (S16-B14)	858-020	2
1085	ELL 90 2-1/2IN SxS SCH80 PVC - PART #806-025 *SPEARS* (S16-B07)	806-025	0
1086	FLANGE 1-1/2IN SLIP FF SCH80 - 854-015 4-HOLE *SPEARS* (S16-C12)	854-015	12
1087	FLANGE 2IN SLIP FF SCH80 - 854-020 PVC 4-HOLE 10/BX *SPEARS* (S16-C01)	854-020	15
1088	FLANGE 3 IN SWIVEL SLIP SCH80 - 854-030 4 HOLE GRAY *SPEARS* (S16-A06)	854-030	0
1089	FLANGE 2-1/2IN SLIP FF SCH80 PVC 854-025 *SPEARS* (S16-B05)	854-025	0
1091	FLANGE 4IN SWIVEL SLIP SCH80 - 854-040 8 HOLE GRAY *SPEARS* (S17-A06)	854-040	31
1092	FLANGE 6IN SWIVEL SLIP SCH80 5/bx- 854-060 8-HOLE *SPEARS* (S17-A02)	854-060	70
1150	TEE 1" FIPT X FIPT SCH80 805-010 15/bx *SPEARS* (S16-E39)	805-010	13

1151	UNION 1" THREADED FIPT W/VITON SEALS SCH80 8058-010 15/bx *SPEARS* (S16-E40)	8058-010	3
1156	ADAPTER 1" M X HOSE BARB SCH80 1436-010 25/bx *SPEARS* (S16-E41)	1436-010	27
1393	ADAPTER MALE 1-1/4IN SCH80 PVC 10/bx- 836-012 *SPEARS* (S16-D07)	836-012	434
1394	ELL 45 DEG. 2-1/2IN SxS SCH80 - PVC 817-025 GRAY *SPEARS* (S16-B06)	817-025	0
1395	PIPE 2IN SCH80 PVC GRAY - 20FT LENGTHS (PR1-C01)		120
1396	PIPE 2-1/2IN SCH80 PVC GRAY - 20FT LENGTHS (PR1-I02)		0
1408	COUPLING 2IN SXS SCH80 PVC - 829-020 20/BX *SPEARS* (S16-B13)	829-020	57
1409	COUPLING 2-1/2IN SXS SCH80 PVC - 829-025 10/bx *SPEARS* (S16-B03)	829-025	0
1410	ELL 90 2IN SCH80 SxS PVC GRAY 25/bx- 806-020 *SPEARS* (S16-B09)	806-020	64
1411	ELL 45 DEG. 2IN SxS SCH80 PVC - 817-020 10/BX *SPEARS* (S16-B11)	817-020	23
1412	ADAPTER MALE 2IN MPTxS SCH80 - 836-020 10/bx *SPEARS* (S16-B16)	836-020	79
1413	ADAPTER MALE 2-1/2IN SCH80 PVC - 836-025 5/BX *SPEARS* (S16-B02)	836-025	12
1414	ADAPTER FEMALE 2IN SCH80 PVC - 835-020 10/bx *SPEARS* (S16-B12)	835-020	36
1415	ADAPTER FEMALE 2-1/2IN SCH80 - 835-025 5/BX *SPEARS* (S16-B01)	835-025	6
1416	WYE 2IN SxS SCH80 PVC - 875-020 *SPEARS* (S16-B08)	875-020	1
1558	ELL 90 6IN SXS SCH80 PVC - 806-060 *SPEARS* (S17-A01)	806-060	11
1763	COUPLING 4IN SxS SCH80 PVC - 829-040 *SPEARS* (S17-A07)	829-040	6
1764	ELL 90 4IN SxS SCH80 PVC - 806-040 *SPEARS* (S17-A05)	806-040	15
1827	COUPLING 2IN FPT X FPT SCH80 PVC 830-020 10/BX *SPEARS* (S16-B18)	830-020	0
1970	PLUG 1IN THRD SCH80 PVC - 850-010 *SPEARS* (S16-D17)	850-010	0
2260	REDUCER 1 X 1/2IN SxS SCH80-837-130 50/bx *SPEARS* (S16-E08)	837-130	36
2275	TEE 1/2IN SLIP SCH80 PVC - 801-005 25/bx *SPEARS* (S16-E25)	801-005	16
2276	TEE 3/4IN SLIP SCH80 PVC - 801-007 *SPEARS* (S16-E06)	801-007	20
2277	TEE 1IN SLIP SCH80 PVC - 801-010 15/bx *SPEARS* (S16-E01)	801-010	2
2278	ELL 90 DEG.1/2IN SxS SCH80 PVC 20/BX 806-005 *SPEARS* (S16-E20)	806-005	34
2280	ELL 90 1IN SxS SCH80 PVC - 806-010 25/BX *SPEARS* (S16-D16)	806-010	31
2281	TEE 1-1/4IN SxS SCH80 PVC - 801-012 10/bx *SPEARS* (S16-D06)	801-012	44
2282	ELL 45 DEG.1/2IN SxS SCH80 PVC - 817-005 *SPEARS* (S16-E27)	817-005	22
2283	ELL 45 DEG.3/4IN SxS SCH80 PVC - 817-007 *SPEARS* (S16-E12)	817-007	8
2284	ELL 45 DEG. 1IN SxS SCH80 PVC - 817-010 *SPEARS* (S16-D20)	817-010	9
2285	COUPLING 1/2IN SxS SCH80 PVC - 829-005 *SPEARS* (S16-E15)	829-005	19
2286	COUPLING 3/4IN SxS SCH80 PVC - 829-007 *SPEARS* (S16-E24)	829-007	11
2287	COUPLING 1IN SxS SCH-80 PVC - 829-010 25/BX *SPEARS* (S16-D21)	829-010	24
2288	ADAPTER FEMALE 1/2IN SCH80 PVC - 835-005 *SPEARS* (S16-E19)	835-005	15
2289	ADAPTER FEMALE 3/4IN SCH80 PVC - 835-007 25/bx *SPEARS* (S16-E11)	835-007	14
2290	ADAPTER FEMALE 1IN SCH80 PVC - 835-010 *SPEARS* (S16-D19)	835-010	14
2291	ADAPTER FEMALE 1-1/2IN SCH80 - 835-015 *SPEARS* (S16-D03)	835-015	11
2292	ADAPTER MALE 1/2IN SCH80 PVC - 836-005 *SPEARS* (S16-E18)	836-005	36
2293	ADAPTER MALE 3/4IN SCH80 PVC - 836-007 *SPEARS* (S16-E10)	836-007	24
2294	ADAPTER MALE 1IN SCH80 PVC - 836-010 20/BX *SPEARS* (S16-E04)	836-010	86
2295	ADAPTER MALE 1-1/2IN SCH80 PVC - 836-015 10/BX *SPEARS* (S16-D04)	836-015	958
2296	REDUCER 3/4 x 1/2IN SCH80 PVC- 837-101 50/bx *SPEARS* (S16-E14)	837-101	15
2297	REDUCER 1x3/4IN SxS SCH80 PVC 50/BX 837-131 *SPEARS* (S16-E09)	837-131	31
2298	REDUCER 1-1/2x3/4IN SxS SCH80 - 837-210 *SPEARS* (S16-E26)	837-210	12
2299	REDUCER 2x 3/4IN SxS SCH80 PVC - 837-248 *SPEARS* (S16-C06)	837-248	2
2300	REDUCER 2 X 1IN SxS SCH80 PVC - 837-249 *SPEARS* (S16-E22)	837-249	8
2301	REDUCER 2 X 1-1/2IN SxS SCH80 - 837-251 10/BX *SPEARS* (S16-E23)	837-251	64
2340	TEE 2IN SLIP SCH80 PVC - 801-020 *SPEARS* (S16-B10)	801-020	13
2341	UNION 1-1/2IN SxS SCH80 PVC - 8057-015 10/BX *SPEARS* (S16-C14)	8057-015	62
2444	UNION 1IN SxS SCH80 PVC - 8057-010 (S16-D14)	8057-010	23
2463	UNION 1/2IN SxS SCH 80 8057-005 20/BX (S16-E36)	8057-005	6

2464	UNION 3/4IN SxS SCH80 PVC - 34P8U 8057-007 (S16-E35)	8057-007	11
2466	UNION 2IN SxS SCH80 PVC 2P8U 857-020 5/BX *SPEARS* (S16-C04)	857-020	24
2545	ELL 90 3/4IN SCH80 PVC GRAY-806-007 20/bx *SPEARS* (S16-E07)	806-007	23
2546	ELL 45 DEG 1-1/2IN SxS SCH80 - 817-015 *SPEARS* (S16-C16)	817-015	15
2588	COUPLING 1-1/4IN SxS SCH80 PVC - 829-012 10/BX *SPEARS* (S16-D08)	829-012	100
2846	ADAPTER FEMALE 1-1/4IN SCH80 835-012 10/BX (S16-D12)	835-012	7
3043	PIPE 3/4IN SCH80 PVC - 20FT LENGTHS GRAY (PR1-E01)		140
3044	PIPE 1IN SCH80 PVC - GRAY 20FT LENGTHS (PR1-F02)		90
3202	PIPE 1-1/2IN SCH80 PVC (PR1-G01)		342
3210	ELL 90 1-1/2IN SxF SCH80 PVC - 807-015 *SPEARS* (S16-C11)	807-015	2
3211	ELL 90 2IN SxF SCH80 PVC - 807-020 *SPEARS* (S16-B15)	807-020	1
3471	PIPE 1-1/4IN SCH80 PVC GRAY - 20FT LENGTHS (PR1-F01)		479
3802	CROSS 1-1/2IN SLIP SCH80 PVC PART #820-015 (S16-C07)	820-015	0
5018	NIPPLE 2 1/2 X CL TBE SCH80 PVC (S16-B04)		0
5155	PIPE 1IN CPVC SCH80 20FT LNG - PART #3670-010 (PR1-H02)		5
5156	PIPE 3/4IN CPVC SCH80 20FT LNG - 3670-007 (PR1-H03)		10
5176	ELL 90 1-1/4IN SCH80 PVC SxS - #806-012 10/bx *SPEARS* (S16-D05)	806-012	145
5177	ELL 45 DEG.1-1/4IN SXS SCH80 - PVC PART #817-012 *SPEARS* (S16-D13)	817-012	0
5196	PIPE 4IN SCH80 PVC 20FT LENGTH (PR2-C01)		120
5225	ELL 3IN 90 SCH80 SxS PVC - 806-030 *SPEARS* (S16-A02)	806-030	0
5226	UNION 3IN SCH80 SxS VITON O-RG - 857-030 *SPEARS* (S16-A07)	857-030	0
5228	ELL 45 DEG. 3IN SXS SCH80 PVC - 817-030 *SPEARS* (S16-A03)	817-030	0
5247	PIPE 1/2IN CPVC SCH80 20FT LNG - 3670-005 (PR1-H04)		0
5250	PIPE 2IN CPVC SCH80 20FT LNG - 3670-020 (PR1-H01)		20
5282	PIPE 3IN SCH80 PVC - 0503080 (PR2-C02)		0
5283	PIPE 6IN SCH80 PVC - 0506080 (PR2-B01)		200
5284	PIPE 8IN SCH80 PVC - PART #0508080		0
5285	VALVE 1/2IN BALL SCH80 PVC SxS - 2622-005G (S16-E42)	2622-005G	10
5287	REDUCER 1/2 X 1/4IN SxF SCH80 - 838-072 *SPEARS* (S16-E16)	838-072	10
5288	REDUCER 3/4 X 1/4IN SxF SCH80 - 838-098 *SPEARS* (S16-E17)	838-098	5
5289	PIPE 1/2IN SCH80 PVC - 0505080 (PR1-E02)		100
5363	TEE 3IN SxSxS SCH 80 801-030 (S16-A01)	801-030	1
5365	VALVE 3IN BUTTERFLY FLANGED - SCH80 #251311-030	251311-030	0
5366	ELL 3IN 22-1/2 DEG. SCH80		0
5367	COUPLING 3IN SxS SCH80 829-030 5/BX *SPEARS* (S16-A05)	829-030	2
5369	REDUCER 8IN X 6IN SCH80		0
5370	COUPLING 8IN SxS SCH80		0
5371	TEE 4IN SxSxS SCH80 801-040	801-040	0
5372	REDUCER 4IN X 1IN SxTHRD SCH80 - 4IN SLIPx1IN THRD		0
5373	TEE 8IN W/8IN SPIGOT CLEAN OUT - AND PLUG-SCH80		0
5385	ADAPTER 4IN FEMALE SCH80 PVC - PART #835-040 *SPEARS*	835-040	0
5386	ELL 45 DEG 4IN SCH80 PVC - PART #817-040 *SPEARS*	817-040	0
5513	CROSS 3IN SLIP SCH80		0
5807	REDUCER 2IN SLIP X 3/4IN FPT - SCH80 PVC		0
5819	ADAPTER 4IN MALE SCH80 836-040 *SPEARS* (S17-A09)	836-040	10
5824	REDUCER 2 X 1/2IN SCH80 SxF - PVC BUSHING		0
6008	REDUCER 1 1/2 X 1 1/4 SCH80 25/BX 837-212 *SPEARS* (S16-E21)	837-212	174
	STAINLESS STEEL		
588	INSERT 3/4IN FOR POLY TUBING - 51 SS (S06-D01)	51 SS	52
589	INSERT 1IN S.S.FOR POLY TUBING - INSERT -52 100/BOX (S06-D03)	52 SS	1977

590	INSERT 1-1/2IN FOR POLY TUBING - 54 SS (S06-D02)	54 SS	0
591	INSERT 2IN SS FOR POLY TUBING - INSERT-55 (S06-D04)	55 SS	34
1261	NIPPLE 1 1/4" X CL 316 SS (S10-C17)	316 SS	11
1696	PIPE 2IN SCH40 SS 316/316L (PR1-I01)	316 SS	0
2009	NIPPLE 2x6 SCHD 40 - 316 S.S. (S15-B28)	316 S.S.	2
2753	NIPPLE 2X6IN SCH/40 - 304/SS (S15-B27)	304 S.S.	0
5917	NIPPLE 1 1/2 X 3IN S.S. (S15-B29)		1
746	SADDLE 2"x1" TAP S/B 2.35-2.56 315-025608-000 (S08-B01)	315-025608-000	1
747	SADDLE TAP 3" X 1" S/B 2.97 - 3.54 315-035408-000 (S08-B02)	315-035408-000	1
748	SADDLE TAP 3" X 1" D/B 2.97 - 3.54 317-035408-000 (S08-B03)	317-035408-000	0
749	SADDLE TAP 3-4" X 2" D/B 3.74-4.13 317-041314-000 (S08-B04)	317-041314-000	0
750	SADDLE 4 X 1 TAP S/B 3.74-4.55 315-00045508-000 (S08-B06)	315-00045508-000	11
754	SADDLE 4" X 1-1/2" TAP D/B 5.00 - 5.63 317-056312-000 (S08-B08)	317-056312-000	0
755	SADDLE 4" X 2" TAP S/B 4.74 - 5.63 315-056314-000 (S08-B09)	315-056314-000	3
756	SADDLE TAP 6"x1" S/B 5.94 - 6.90 315-066308-000 *8 PER BX* (S07-D14)	315-066308-000	171
759	SADDLE 6 X 1-1/2 TAP S/B 6.84-7.60 315-076012-000 (S08-B10)	315-076012-000	0
760	SADDLE 6" X 2" TAP D/B 6.84 - 7.60 317-076014-000 (S08-B12)	317-076014-000	0
761	SADDLE 6" X 2" TAP S/B 6.84 - 7.60 315-076014-000 (S08-B11)	315-076014-000	3
766	SADDLE 8"x2" TAP SB 8.54 - 10.10 315-00101014-000 (S08-B14)	315-00101014-000	1
767	SADDLE 8" X 2" TAP D/B 8.54 - 10.10 317-101014-000 (S08-B15)	317-101014-000	1
769	SADDLE 10" X 1-1/2" TAP D/B - 10.75-11.10 317-111012 (S08-C01)	317-111012	0
770	SADDLE 10" X 2" TAP D/B 10.64-12.12 317-121214-000 (S08-C02)	317-121214-000	0
771	SADDLE 10" X 2" TAP S/B 10.64 - 12.12 315-121214-000 (S08-C03)	315-121214-000	0
772	SADDLE 12"x 1" TAP 12.62 - 14.32 SB 315-00143208-000 (S08-C04)	315-00143208-000	15
773	SADDLE 12" X 1" TAP D/B 12.62 - 14.32 317-143208-000 (S08-C05)	317-143208-000	0
774	SADDLE 12" X 1-1/2" TAP D/B 12.62 - 14.32 317-143212-000 (S08-C06)	317-143212-000	0
775	SADDLE 12" X 1-1/2" TAP D/B 12.75 - 13.20 317-132012-000 (S08-C07)	317-132012-000	0
776	SADDLE 12" X 2" TAP D/B 12.62 - 14.32 317-143214-000 (S08-C08)	317-143214-000	4
779	SADDLE 16" X 1" TAP D/B 17.40 - 18.88 317-188808-000 (S08-C11)	317-188808-000	0
780	SADDLE 16" X 1-1/2" TAP D/B 15.95 - 17.25 317-172512-000 (S08-C12)	317-172512-000	0
781	SADDLE 16-18" X 1-1/2" TAP D/B 17.40-18.88 317-188812-000 (S08-D01)	317-188812-000	0
782	SADDLE 16" X 2" TAP D/B 17.40-18.88 317-188814-000 (S08-D02)	317-188814-000	0
783	SADDLE 18" X 1" TAP D/B 19.00-20.50 JCM 645320 (S08-D03)	645320	0
785	SADDLE 20" X 1" TAP D/B 21.35 - 22.60 JCM 406-2260X08IP (S08-D04)	406-2260X08IP	0
786	SADDLE 20" X 2" TAP D/B 21.35 - 22.60 JCM 406-2260X14IP (S08-D05)	406-2260X14IP	0
787	SADDLE 24-26" X 1" TAP D/B 25.50-26.50 JCM 406-2650X08IP (S08-D06)	406-2650X08IP	0
1308	SADDLE TAP 3-4" X 2" S/B 3.74 - 4.55 315-00045514-000 (S08-B05)	315-00045514-000	3
1757	SADDLE 14" X 2" TAP D/B 14.73 - 15.65 317-156514-000 (S08-C09)	317-156514-000	0
2045	SADDLE 8"x1" TAP S/B 8.54 - 10.10 315-101008-000 (S07-D13)	315-101008-000	36
2754	SADDLE TAP 4"x1" S/B 4.74 - 5.63 315-056308-000 (S08-B07)	315-056308-000	8
3766	SADDLE TAP 16"x1" S/B FORD 17.40-18.40 FC-202-1840-IP4 (S08-C10)	FC-202-1840-IP4	1
5293	SADDLE 6"X1" TAP D/B 5.94 - 6.90 317-069008-000	317-069008-000	0
5528	SADDLE 10" x 1" TAP S/B 10.64 - 12.12 315-121208-000 (S08-B16)	315-121208-000	0
5803	SADDLE 6"x 2" TAP D/B 5.94 - 6.90 317-069014-000	317-069014-000	0
5916	SADDLE 2 1/2" X 1 1/2" S/B 2.44 - 2.91 315-029112-000 (S08-B13)	315-029112-000	0
170	WRENCH FOR LOCKING LID - VALVE BOX 59WL (B02-21)	59WL	4
231	SPRING 32MM FOR JAW WRENCH (B02-78)		0

232	JAW 1-1/4IN FOR JAW WRENCH - ONE HANDED 32MM (B02-77)		0
275	BLADE 1-1/2IN SCISSOR SHEAR - REED #SC1/PIPE CUTTER (B04-24)	REED #SC1	0
335	BLADE FOR 18IN PVC SAW - PPS18B REED *PER EA.* (B13-C01)	PPS18B	7
336	SAW HAND 18IN FOR PVC - PPS18 REED *PER EA.* (B13-D01)	PPS18	7
809	CURB BX BSE/ARCH PAT 1 1/4X5FT - W/27/32IN BRASS PLUG (S09-A05)		0
810	STATIONARY ROD FOR CURB VALVE - 5FT 59ROD60 FORD (S09-A06)	59ROD60	0
811	HANDLE T-SHUT OFF ROD 5FT - FORD 59SROD5	59SROD5	0
820	HOOK MANHOLE COVER - P553 (S09-B13)	P553	3
822	PROBE FIBERGLASS W/TEE HANDLE - 4FT (S09-B15)		31
823	WRENCH ADJUSTABLE HYDRANT - AHW (S09-B16)		8
1108	SHOVEL ROUND-POINT RAZORBACK - 65UF45520 (SW-04)	65UF45520	68
1110	SHOVEL SQUARE-POINT RAZORBACK - 65UF44124 (SW-10)	65UF44124	23
2018	PIN ASSEMBLY FOR JAW WRENCH - 92727 MW-PS (B02-75)		0
2019	PIN 3/16IN SPRIAL F/JAW WRENCH - 30008 (B02-76)		0
2092	CUTTER PVC PIPE 1-1/2IN - REED RS1 (B12-C01)	RS1	19
2750	WRENCH VALVE KEY TELESCOPIC - 2x4-8FT STEEL (S09-A07)		1
2785	CRIMPING TOOL 3/4-1 IN STEEL - PES1CTS FOR POLY (B01-H10)		0
2830	BLADE 1-1/2IN RATCHET SHEARS - RS-1B REED (B12-C02)	RS-1B	21
3168	HANDLE POST HOLE DIGGER - 72/IN WOOD (SW-14)		0
3259	BLADE 2IN RATCHET SHEARS REED - RS2 REED (B04-23)	RS2	4
5015	WRENCH VALVE OPERATING 2IN SQ. X 6FT LONG (S09-C11)		2
5767	HOOK MANHOLE 36IN (S09-B14)		6
988	VALVE 2IN GATE KENNEDY FG#4597 - 200W / IRON (S11-C19)	4597 - 200W	0
989	VALVE 4IN PLUG DEZURIK - FIG118.F.6.RS26.ANG (S12-E06)	FIG118.F.6.RS26.ANG	0
990	VALVE 4IN CHECK FLANGED (S12-E07)		0
991	VALVE 4IN GATE F6100 MJ - R/S (S12-E08)	F6100 MJ - R/S	7
992	VALVE 6IN GATE F6100 MJ - R/S L/ACC (S12-E09)	F6100 MJ - R/S	3
994	VALVE 6" GATE F6106 MJ / FLANGE (S12-E10)	F6106 MJ / FLANGE	0
995	VALVE 8IN GATE F6100 MJ - R/S (S12-E11)	F6100 MJ - R/S	3
1789	VALVE 2IN GATE/RW F-THD. IRON - F6103 CLOW (S11-C20)	F6103	8
2093	VALVE 10IN GATE F6100 MJ R/S (S12-E13)	F6100 MJ R/S	0
2214	VALVE 12IN GATE F6100 MJ - R/S (S12-E12)	F6100 MJ - R/S	3
2722	VALVE 12IN PLUG W/GEAR & 2NUT - 10785901052255 (S10-E09)	10785901052255	0
4207	VALVE 3IN FLGED PLUG DEZURIK W BURIED SERV ADAPTER (S12-E04)		0
4208	VALVE 2IN FLANGED PLUG DEZURIK W/BURIED SERV. ADAPT (S12-E02)		0
4209	VALVE 3IN FLANGED KENNEDY SPRING & LEVER (S12-E03)		0
4210	VALVE 2IN CHECK FLANGED KENNEDY SPRING & LEVER (S12-E01)		0
5374	VALVE 3IN GATE F6100 MJ RW L/ACC - R/S (S12-E05)	F6100 MJ RW L/ACC - R/S	0
5766	VALVE 16IN MJ GATE - F6100 W/SQ OPERATING NUT	F6100	0
5773	VALVE 6IN TAPPING F6114 MJ RW	F6114 MJ RW	0
5785	VALVE 3IN GATE F6102 R/S - FLANGED W/HAND WHEEL	F6102 R/S	0
5789	VALVE 6IN CHECK SPR & LVR - KENNEDY #106LS	106LS	0
5790	VALVE 6IN PLUG DEZURIK #F118N - FLANGED W/2IN OP NUT	F118N	0
5821	VALVE 8IN DEZURIK PLUG FLANGED - 2IN OP NUT/#F118N	F118N	0
5841	VALVE 4IN KENNEDY SPRING/LEVER - FLANGED STYLE 106SL	106SL	0
6092	VALVE 2 1/2" GATE/RW THRD F6103 CLOW (S11-C21)	F6103	1

BID ADDENDUM # 1
BID # 20120009
Addendum Date: March 19, 2012

SUPPLIERS FOR WATER AND SEWER PRODUCTS

NOTE: The bid opening date is changed to March 29, 2012 @3:00 p.m.

Please see the following changes/modifications to the subject bid:

QUESTIONS and ANSWERS

Q1. Could you tell me if Charlotte pipe and fittings will be allowed for this bid?

A1. Yes. We do not address Schedule 40 or 80 PVC in the City specs or Qualified Products List.

Q2. Will the City award by line item or by section or does the quote have to be complete?

A2. The City intends to award by section, however the City reserves the right to award by line if it is the best value.

Instructions to Bidder:

Each bidder must acknowledge receipt of any addenda on the Bid Reply Sheet in order to have his/her bid or proposal/bid to be accepted.

BID ADDENDUM # 3
BID # 20120009
Addendum Date: March 27, 2012

SUPPLIERS FOR WATER AND SEWER PRODUCTS

NOTE: The bid opening date is hereby changed to Wednesday, April 4, 2012 @3:00 p.m.

Please see the following changes/modifications to the subject bid:

1. QUESTIONS and ANSWERS

Q1. *Do we quote per foot price or price per piece of pipe?*
Example: Line item 1032 and 1033. One shows a dimension of pipe 20-ft and the other shows no dimension.

A1. All pipe is per foot.

2. REVISED BID REPLY EXCEL SPREADSHEET

The Bid Reply Spreadsheet has been revised as Addendum #2. The revised spreadsheet corrects line item calculations and adds two (2) additional categories: "NO-LEAD BRASS ITEMS/FORD, MUELLER OR EQUAL" and (NO-LEAD) "METERS, WATER & ALL PARTS".

Please use the Revised Bid Reply Spreadsheet – (Addendum #2).

NOTE: The bid opening has been changed to Wednesday, April 4, 2012 @ 3:00 p.m.

Instructions to Bidder:

Each bidder must acknowledge receipt of any addenda on the Bid Reply Sheet in order to have his/her bid or proposal/bid to be accepted.

BID ADDENDUM # 4
BID # 20120009
Addendum Date: April 2, 2012

SUPPLIERS FOR WATER AND SEWER PRODUCTS

Bid due date and time: Wednesday, April 4, 2012 @3:00 p.m.

CAUTION ALL BIDDERS: Please adhere to Section 6.4 Bid Information.

"For information concerning procedures for responding to this bid, contact Helen Quintana, CPPB, Contract Specialist, at (772) 871-5221 (Telephone); (772) 871-7337 (Fax); hquintana@cityofpsl.com, (e-mail). Such contact is to be for clarification purposes only. To ensure fair consideration for all Bidders, it must be clearly understood that Mrs. Quintana is the only individual who is authorized to represent the City. Questions submitted to any other person in any other department will not be addressed. Additionally, the City prohibits communications initiated by a Bidder to ***any*** *City Official or employee evaluating or considering the bids* ***(up to and including the Mayor and City Council)****, prior to the time an award decision has been made."*

Information from anyone other than the Contract Specialist via an Addendum is considered invalid.

Instructions to Bidder:

Each bidder must acknowledge receipt of any addenda on the Bid Reply Sheet in order to have his/her bid or proposal/bid to be accepted.

PORT ST. LUCIE CITY COUNCIL
AGENDA ITEM REQUEST

Meeting Date: June 11, 2012

Public Hearing ____ Ordinance ____ Resolution ____ Motion X

Item: Contract #20120009 – Suppliers for Water & Sewer Products

Recommended Action: Approval to enter into a thirty six (36) month Fixed Unit Price Contract with HD Waterworks and Ferguson Waterworks with two (2) additional twelve month periods at a mutually agreed upon price with costs documented from the manufacturer. Each line item shall be awarded to the bidder with the lowest unit price with the exception of the pipe items that HD took exception to in their bid, which shall be awarded to Ferguson. All items are identified on the attached bid tabulation sheet.

Exhibits: Department memo attached [X] yes [ ] no

Copies of the Bid tabulation Report, Specifications, and the submitted Bid Reply Sheet.

Summary Explanation/Background Information:

The bid was posted to Demandstar on February 17, 2012, and after subsequent addenda (4), opened on April 4, 2012. There were 711 suppliers notified; 33 downloaded specifications and two submitted Bids: HD Waterworks and Ferguson Waterworks. HD Waterworks, the current supplier, was the overall lowest bidder for most line items, but took exception to the terms specified in the bid solicitation by declaring that "*all pipe pricing will be viewed quarterly*". The line items for which HD submitted the lowest bid will be awarded to HD with the exception of the pipe, which will be awarded to Ferguson along with the line items for which Ferguson was the lowest bidder. The contract period will be for thirty-six (36) months with two (2) additional twelve (12) month renewals at mutually agreed upon unit prices.

Purchase (X) was budgeted

Estimated Annual Expenditure: $ 487,942.70

Department requests expenditure from the following:

Fund	431	Utility Fund
Cost Center	000	
Object Code	141005	Inventory
Project	00000	

Director of OMB concurs with award: _____ City Manager concurs with award: _____

Submitted by: ***Jesus Merejo***

Title: Utility Director Date Submitted: June 5, 2012